# GILL BOX SCRAPERS

## B10, B20, B25, B30, B201, B301, B401
## R1048, R1060, R10, R20, R25, R30
## SR10, SR20, SR25, SR30, SR58, SR65

# OPERATOR'S MANUAL

WOODS

PN-51868 (Rev. 1/4/00)

**TO THE DEALER:**

Assembly and proper installation of this product is the responsibility of the WOODS dealer. Read manual instructions and safety rules. Make sure all items on the Dealer's Pre-Delivery and Delivery Check Lists in the Operator's Manual are completed before releasing equipment to the owner.

The dealer must complete the Warranty Registration included in this manual. Both dealer and customer must sign the registration which certifies that all Dealer Check List items have been completed. The dealer is to return the prepaid postage portion to Woods, give one copy to the customer, and retain one copy. **Note: Warranty credit is subject to this form being completed and returned.**

**TO THE OWNER:**

Read this manual before operating your WOODS equipment. The information presented will prepare you to do a better and safer job. Keep this manual handy for ready reference. Require all operators to read this manual carefully and become acquainted with all the adjustment and operating procedures before attempting to operate. Replacement manuals can be obtained from your dealer or, in the United States and Canada, by calling 1-800-319-6637.

The equipment you have purchased has been carefully engineered and manufactured to provide dependable and satisfactory use. Like all mechanical products, it will require cleaning and upkeep. Lubricate the unit as specified. Observe all safety information in this manual and safety decals on the equipment.

For service, your authorized WOODS dealer has trained mechanics, genuine WOODS service parts, and the necessary tools and equipment to handle all your needs.

Use only genuine WOODS service parts. Substitute parts will void the warranty and may not meet standards required for safe and satisfactory operation. Record the model number and serial number of your equipment in the spaces provided:

**Model:** _____ **Date of Purchase** _____

**Serial Number:** **(see Safety Decal section for location)** _____

Provide this information to your dealer to obtain correct repair parts.

Throughout this manual, the term **IMPORTANT** is used to indicate that failure to observe can cause damage to equipment. The terms **CAUTION**, **WARNING** and **DANGER** are used in conjunction with the Safety-Alert Symbol, (a triangle with an exclamation mark), to indicate the degree of hazard for items of personal safety.

| | |
|---|---|
| ⚠ | This Safety-Alert Symbol indicates a hazard and means ATTENTION! BECOME ALERT! YOUR SAFETY IS INVOLVED! |
| ⚠ **DANGER** | Indicates an imminently hazardous situation that, if not avoided, will result in death or serious injury. |
| ⚠ **WARNING** | Indicates a potentially hazardous situation that, if not avoided, could result in death or serious injury, and includes hazards that are exposed when guards are removed |
| ⚠ **CAUTION** | Indicates a potentially hazardous situation that, if not avoided, may result in minor or moderate injury. |

**WOODS**
**DUAL**
**GANNON**
**ALLOWAY**
**GILL**
**GANNONBMP**
**WAIN ROY**

WOODS



(Rev. 7/28/98)

# TABLE OF CONTENTS

INTRODUCTION . . . . . Inside Front Cover
SPECIFICATIONS . . . . . 1 – 4
GENERAL INFORMATION . . . . . 5
CHECK LISTS . . . . . 5
BOLT SIZE CHART . . . . . 6
BOLT TORQUE CHART . . . . . 7
SAFETY RULES . . . . . 8 – 9
SAFETY DECALS . . . . . 10 – 11
OPERATION . . . . . 12
OWNER SERVICE . . . . . 14
INDEX TO PARTS LISTS . . . . . 17
WARRANTY . . . . . Inside Back Cover

# SPECIFICATIONS

| "SR" SERIES BOX SCRAPER | SR10HD | SR20HD | SR25HD | SR30HD |
|---|---|---|---|---|
| Width | 65" | 72" | 77" | 84" |
| Height (with handle) | 52" | 52" | 52" | 52" |
| Depth | 43" | 43" | 43" | 43" |
| No. of Cutting Edges | 2 | 2 | 2 | 2 |
| Cutting Edge Size | 1/2" x 6" Reversible | 1/2" x 6" Reversible | 1/2" x 6" Reversible | 1/2" x 6" Reversible |
| Weight | 954# | 1017# | 1077# | 1140# |
| No. of Shanks/Points | 6 | 6 | 8 | 8 |
| Floating Hinged Tailgate | Yes | Yes | Yes | Yes |
| Capacity (cu. ft.) | 20.1 | 21.7 | 23.2 | 25.3 |
| Tractor HP Requirement | 32–80hp | 32–80hp | 32–80hp | 32–80hp |
| Tractor Hitch Class | Cat 1 | Cat 1 | Cat 1 | Cat 1 |

# SPECIFICATIONS (cont'd)

| "R" SERIES ROLL-OVER SCRAPER | R1048 | R1060 | R10 | R20 |
|---|---|---|---|---|
| Width | 48" | 60" | 65" | 72" |
| Height | 35-3/4" | 35-3/4" | 35-3/4" | 35-3/4" |
| Depth | 44" | 44" | 44" | 44" |
| No. of Cutting Edges | 2 | 2 | 2 | 2 |
| Cutting Edge Size | 1/2" x 6" Reversible | 1/2" x 6" Reversible | 1/2" x 6" Reversible | 1/2" x 6" Reversible |
| Weight | 606# | 730# | 750# | 802# |
| No. of Shanks/Points | 4 | 6 | 6 | 7 |
| Tractor HP Requirement | 32-60hp | 32-60hp | 32-60hp | 32-60hp |
| Tractor Hitch Class | Cat 1 | Cat 1 | Cat 1 | Cat 1 |

| "R" SERIES ROLL-OVER SCRAPER | R25 | R30 |
|---|---|---|
| Width | 77" | 84" |
| Height | 35-3/4" | 35-3/4" |
| Depth | 44" | 44" |
| No. of Cutting Edges | 2 | 2 |
| Cutting Edge Size | 1/2" x 6" Reversible | 1/2" x 6" Reversible |
| Weight | 860# | 939# |
| No. of Shanks/Points | 7 | 7 |
| Tractor HP Requirement | 32-60hp | 32-60hp |
| Tractor Hitch Class | Cat 1 | Cat 1 |

# NOTES

# SPECIFICATIONS (cont'd)

| "B" SERIES BOX SCRAPER | B10 | B20 | B25 | B30 |
|---|---|---|---|---|
| Width | 65" | 72" | 77" | 84" |
| Height | 37-1/2" | 37-1/2" | 37-1/2" | 37-1/2" |
| Depth | 43-1/2" | 43-1/2" | 43-1/2" | 43-1/2" |
| No. of Cutting Edges | 2 | 2 | 2 | 2 |
| Cutting Edge Size | 1/2" x 6" Reversible | 1/2" x 6" Reversible | 1/2" x 6" Reversible | 1/2" x 6" Reversible |
| Weight (5 Shanks) | 660# | 707# | 755# | 790# |
| Weight (7 Shanks) | – | – | – | 818# |
| Weight (9 Shanks) | 698# | 743# | 791# | – |
| No. of Shanks/Points | 5 or 9 | 5 or 9 | 5 or 9 | 5 or 7 |
| Floating Hinged Tailgate | Yes | Yes | Yes | Yes |
| Tractor HP Requirement | 28–80hp | 28–80hp | 28–80hp | 28–80hp |
| Tractor Hitch Class | Cat 1 | Cat 1 | Cat 1 | Cat 1 |

| "SR" SERIES BOX SCRAPER | SR10 | SR20 | SR25 | SR30 |
|---|---|---|---|---|
| Width | 65" | 72" | 77" | 84" |
| Height (with handle) | 52" | 52" | 52" | 52" |
| Depth | 43" | 43" | 43" | 43" |
| No. of Cutting Edges | 2 | 2 | 2 | 2 |
| Cutting Edge Size | 1/2" x 6" Reversible | 1/2" x 6" Reversible | 1/2" x 6" Reversible | 1/2" x 6" Reversible |
| Weight | 912# | 975# | 1035# | 1098# |
| No. of Shanks/Points | 6 | 6 | 8 | 8 |
| Floating Hinged Tailgate | Yes | Yes | Yes | Yes |
| Capacity (cu. ft.) | 20.1 | 21.7 | 23.2 | 25.3 |
| Tractor HP Requirement | 32–70hp | 32–70hp | 32–70hp | 32–70hp |
| Tractor Hitch Class | Cat 1 | Cat 1 | Cat 1 | Cat 1 |

# SPECIFICATIONS (cont'd)

| STANDARD "SR" SERIES BOX SCRAPER | SR58 | SR65 |
|---|---|---|
| Width | 58" | 65" |
| Height (with handle) | 52" | 52" |
| Depth | 43" | 43" |
| No. of Cutting Edges | 2 | 2 |
| Cutting Edge Size | 1/2" x 6" Reversible | 1/2" x 6" Reversible |
| Weight | 568# | 655# |
| No. of Shanks/Points | 4 | 6 |
| Floating Hinged Tailgate | Yes | Yes |
| Capacity (cu ft) | 18.5 | 20.1 |
| Tractor HP Requirement | 22–45hp | 22–45hp |
| Tractor Hitch Class | Cat 1 | Cat 1 |

| BARNYARD SCRAPER | B201 / B202 | B301 / B302 | B401 / B402 |
|---|---|---|---|
| Width | 72" | 84" | 96" |
| Height (at A-frame) | 36-1/2" | 36-1/2" | 36-1/2" |
| Depth | B201: 41"<br>B202: 44" | B301: 41"<br>B302: 44" | B401: 41"<br>B402: 44" |
| No. of Cutting Edges | B201: 1<br>B202: 2 | B301: 1<br>B302: 2 | B401: 1<br>B402: 2 |
| Cutting Edge Size | 1/2" x 6" Reversible | 1/2" x 6" Reversible | 1/2" x 6" Reversible |
| Weight | B201: 583#<br>B202: 655# | B301: 693#<br>B302: 732# | B401: 790#<br>B402: 845# |
| Floating Hinged Tailgate | B202 Only | B302 Only | B402 Only |
| Tractor HP Requirement | 60hp max | 60hp max | 60hp max |
| Tractor Hitch Class | Cat 1 | Cat 1 | Cat 1 |

# GENERAL INFORMATION

The purpose of this manual is to assist you in operating and maintaining your scraper. Read it carefully. It furnishes information and instructions that will help you achieve years of dependable performance. These instructions have been compiled from extensive field experience and engineering data. Some information may be general in nature due to unknown and varying operating conditions. However, through experience and these instructions, you should be able to develop procedures suitable to your particular situation.

The illustrations and data used in this manual were current at the time of printing, but due to possible inline production changes, your machine may vary slightly in detail. We reserve the right to redesign and change the machines as may be necessary without notification.

Throughout this manual, references are made to right and left direction. These are determined by standing behind the equipment facing the direction of forward travel.

# CHECK LISTS

## PRE-DELIVERY CHECK LIST

(DEALER'S RESPONSIBILITY)

Inspect the equipment thoroughly after assembly to ensure it is set up properly before delivering it to the customer.

The following check lists are a reminder of points to inspect. Check off each item as it is found satisfactory or after proper adjustment is made.

___ Check that all safety decals are installed and in good condition. Replace if damaged.

___ Check all bolts to be sure they are tight.

___ Check that all cotter pins and safety pins are properly installed. Replace if damaged.

___ Check and grease all lubrication points as identified in "Service, lubrication information".

## DELIVERY CHECK LIST

(DEALER'S RESPONSIBILITY)

___ Instruct customer how to lubricate and explain importance of lubrication.

___ Show customer the safe, proper procedures to be used when mounting, dismounting, and storing equipment.

___ For mounted units, add wheel weights, ballast in front tires, and/or front tractor weight to enhance front end stability. A minimum 20% of tractor and equipment gross weight must be on front tractor wheels. When adding weight to attain 20% of tractor and equipment weight on front tractor wheels, you must not exceed the ROPS weight certification. Weigh the tractor and equipment. Do not estimate!

___ Show customer how to make adjustments.

___ Present Operator's Manual and request that customer and all operators read it before operating equipment. Point out the manual safety rules, explain their meanings and emphasize the increased safety hazards that exist when safety rules are not followed.

___ Point out the safety decals. Explain their meaning and the need to keep them in place and in good condition. Emphasize the increased safety hazards when instructions are not followed.

___ Explain to customer the potential crushing hazards of going underneath raised equipment. Instruct customer that service work does not require going underneath unit and never to do so.

# BOLT SIZE CHART

**NOTE:** Chart shows bolt thread sizes and corresponding head (wrench) sizes for standard SAE and Metric Bolts.

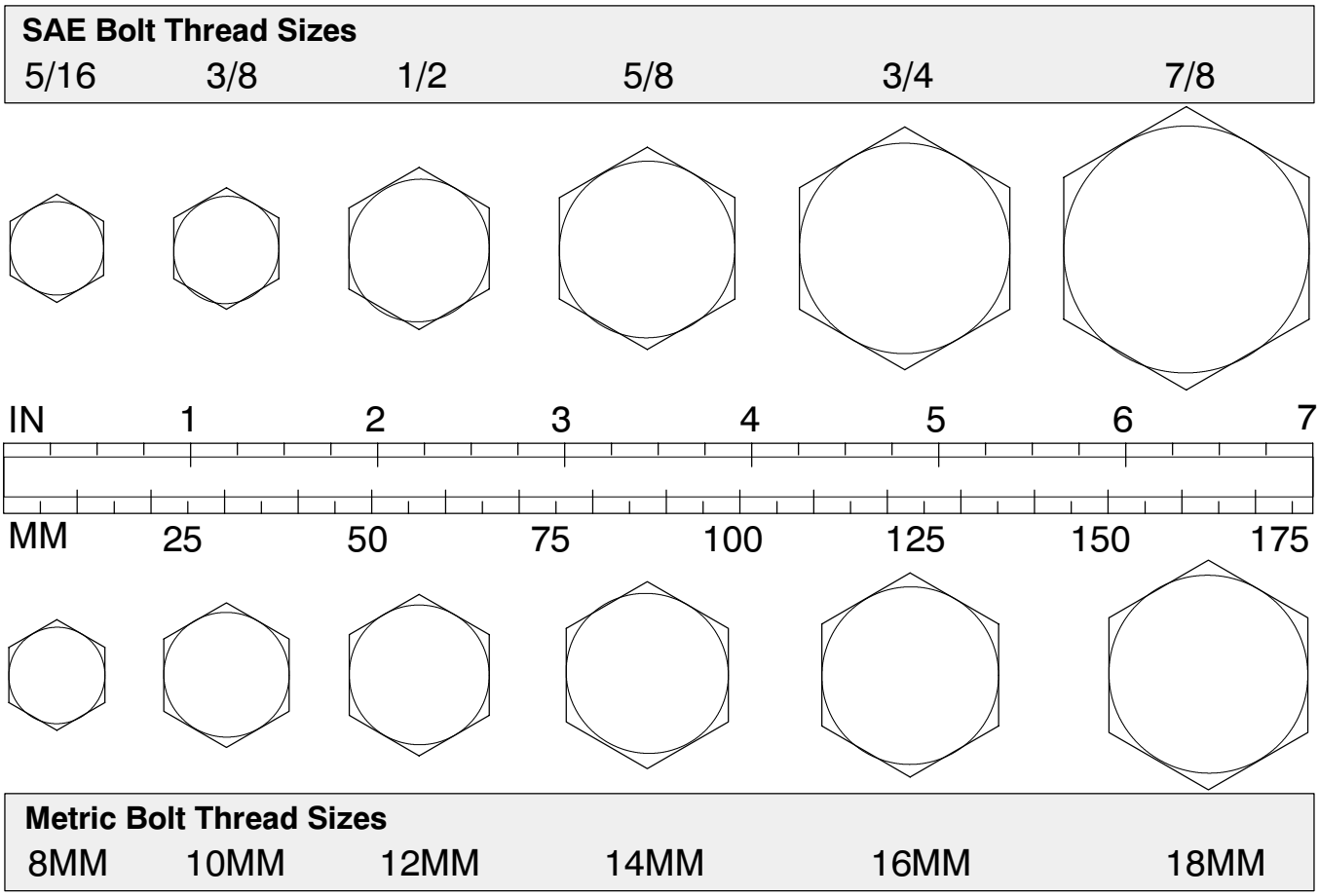


# NOTES

# BOLT TORQUE CHART

Always tighten hardware to these values unless a different torque value or tightening procedure is listed for a specific application.

Fasteners must always be replaced with the same grade as specified in the manual parts list.

Always use the proper tool for tightening hardware: SAE for SAE hardware and Metric for metric hardware.

Make sure fastener threads are clean and you start thread engagement properly.

All torque values are given to lube specifications qualified by plating used on bolts per SAE J1701 JUL96 and SAE J1701M JUL96.

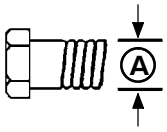


## SAE SERIES TORQUE CHART

**SAE Grade 2 (No Dashes)**

SAE Bolt Head Identification

**SAE Grade 5 (3 Radial Dashes)**

**SAE Grade 8 (6 Radial Dashes)**

| A Diameter (Inches) | Wrench Size | MARKING ON HEAD | | | | | |
|---|---|---|---|---|---|---|---|
| | | SAE 2 | | SAE 5 | | SAE 8 | |
| | | Lbs.-Ft. | N-m | Lbs.-Ft. | N-m | Lbs.-Ft. | N-m |
| 1/4” | 7/16” | 6 | 8 | 10 | 13 | 14 | 18 |
| 5/16” | 1/2” | 12 | 17 | 19 | 26 | 27 | 37 |
| 3/8” | 9/16” | 23 | 31 | 35 | 47 | 49 | 67 |
| 7/16” | 5/8” | 36 | 48 | 55 | 75 | 78 | 106 |
| 1/2” | 3/4” | 55 | 75 | 85 | 115 | 120 | 163 |
| 9/16” | 13/16” | 78 | 106 | 121 | 164 | 171 | 232 |
| 5/8” | 15/16” | 110 | 149 | 170 | 230 | 240 | 325 |
| 3/4” | 1-1/8” | 192 | 261 | 297 | 403 | 420 | 569 |
| 7/8” | 1-5/16” | 306 | 416 | 474 | 642 | 669 | 907 |
| 1” | 1-1/2” | 467 | 634 | 722 | 979 | 1020 | 1383 |

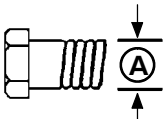


## METRIC SERIES TORQUE CHART

**Metric Grade 8.8**

Metric Bolt Head Identification

**Metric Grade 10.9**

| Diameter & Thread Pitch (Millimeters) A | Wrench Size | COARSE THREAD | | | | FINE THREAD | | | | Diameter & Thread Pitch (Millimeters) A |
|---|---|---|---|---|---|---|---|---|---|---|
| | | MARKING ON HEAD | | | | MARKING ON HEAD | | | | |
| | | Metric 8.8 | | Metric 10.9 | | Metric 8.8 | | Metric 10.9 | | |
| | | N-m | Lbs.-Ft. | N-m | Lbs.-Ft. | N-m | Lbs.-Ft. | N-m | Lbs.-Ft. | |
| 6 x 1.0 | 10 mm | 8 | 6 | 11 | 8 | 8 | 6 | 11 | 8 | 6 x 1.0 |
| 8 x 1.25 | 13 mm | 20 | 15 | 27 | 20 | 21 | 16 | 29 | 22 | 8 x 1.0 |
| 10 x 1.5 | 16 mm | 39 | 29 | 54 | 40 | 41 | 30 | 57 | 42 | 10 x 1.25 |
| 12 x 1.75 | 18 mm | 68 | 50 | 94 | 69 | 75 | 55 | 103 | 76 | 12 x 1.25 |
| 14 x 2.0 | 21 mm | 109 | 80 | 151 | 111 | 118 | 87 | 163 | 120 | 14 x 1.5 |
| 16 x 2.0 | 24 mm | 169 | 125 | 234 | 173 | 181 | 133 | 250 | 184 | 16 x 1.5 |
| 18 x 2.5 | 27 mm | 234 | 173 | 323 | 238 | 263 | 194 | 363 | 268 | 18 x 1.5 |
| 20 x 2.5 | 30 mm | 330 | 243 | 457 | 337 | 367 | 270 | 507 | 374 | 20 x 1.5 |
| 22 x 2.5 | 34 mm | 451 | 333 | 623 | 460 | 495 | 365 | 684 | 505 | 22 x 1.5 |
| 24 x 3.0 | 36 mm | 571 | 421 | 790 | 583 | 623 | 459 | 861 | 635 | 24 x 2.0 |
| 30 x 3.0 | 46 mm | 1135 | 837 | 1570 | 1158 | 1258 | 928 | 1740 | 1283 | 30 x 2.0 |

**Typical Washer Installations**

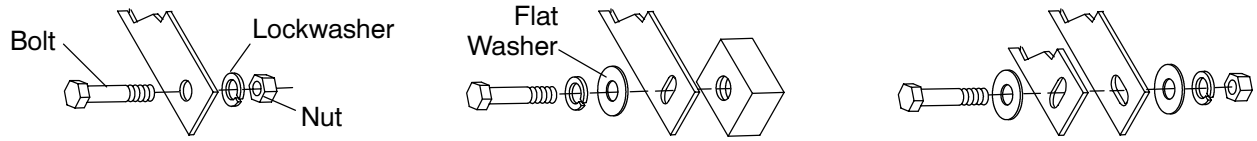

# SAFETY RULES

## ⚠ ATTENTION! BECOME ALERT! YOUR SAFETY IS INVOLVED! ⚠

Safety is a primary concern in the design and manufacture of our products. Unfortunately, our efforts to provide safe equipment can be wiped out by a single careless act of an operator.

In addition to the design and configuration of equipment, hazard control and accident prevention are dependent upon the awareness, concern, prudence and proper training of personnel involved in the operation, transport, maintenance and storage of equipment.

It has been said *"The best safety device is an informed, careful operator."* We ask you to be that kind of an operator.

### TRAINING

- **Safety instructions are important! Read all attachment and power unit manuals; follow all safety rules and safety decal information. (Replacement manuals are available from dealer or, in the United States and Canada, call 1-800-319-6637.) Failure to follow instructions or safety rules can result in serious injury or death.**
- **If you do not understand any part of this manual and need assistance, see your dealer.**
- **Operators must be instructed in and be capable of the safe operation of the equipment, its attachments and all controls. Do not allow anyone to operate this equipment without proper instructions.**
- **Do not allow children or untrained persons to operate equipment.**

### PREPARATION

- **Check that all hardware is tight and properly installed. Always tighten to torque chart specifications.**
- **Always wear relatively tight and belted clothing to avoid entanglement in moving parts. Wear sturdy, rough-soled work shoes and protective equipment for eyes, hair, hands, hearing and head.**
- **Ensure implement is properly attached, adjusted and in good operating condition.**
- **Power unit must be equipped with ROPS or ROPS CAB and seat belt. Keep seat belt securely fastened. Falling off power unit can result in death from being run over or crushed. Keep foldable ROPS systems in "locked up" position at all times.**
- **Ensure all safety decals are installed. Replace if damaged. (See Safety Decals section for location.)**
- **A minimum 20% of tractor and equipment weight must be on tractor front wheels with attachments in transport position. Without this weight, tractor could tip over causing personal injury or death. The weight may be attained with a loader, front wheel weights, ballast in tires or front tractor weights. When attaining the minimum 20% weight on the front wheels, you must not exceed the Roll Over Protection Structure (ROPS) weight certification. Weigh the tractor and equipment. Do not estimate.**
- **Never attach the box scraper release rope to the operator, the operator's clothing, or the tractor seat.**

### OPERATIONAL SAFETY

- **Keep bystanders away from equipment.**
- **Do not operate equipment while under the influence of alcohol or drugs.**
- **Operate only in daylight or good artificial light.**
- **Keep hands, feet, hair and clothing away from equipment while engine is running. Stay clear of all moving parts.**
- **Always comply with all state and local lighting and marking requirements.**
- **No riders are allowed on power unit or attachment.**
- **Power unit must be equipped with ROPS or ROPS CAB and seat belt. Keep seat belt securely fastened. Falling off power unit can result in death from being run over or crushed. Keep foldable ROPS systems in "locked up" position at all times.**
- **Always sit in tractor seat when operating controls or starting engine. Securely fasten seat belt, place transmission in neutral, engage brake and ensure all other controls are disengaged before starting tractor engine.**
- **Look down and to the rear and make sure area is clear before operating in reverse.**
- **Use extreme care when working close to fences, ditches, other obstructions, or on hillsides.**

# SAFETY RULES

## ⚠ ATTENTION! BECOME ALERT! YOUR SAFETY IS INVOLVED! ⚠

■ Do not operate on steep slopes.

■ Do not stop, start or change directions suddenly on slopes.

■ Use extreme care and reduce ground speed on slopes and rough terrain.

■ Watch for hidden hazards on the terrain during operation.

■ Stop tractor and implement immediately upon striking an obstruction. Turn off engine, remove key, inspect and repair any damage before resuming operation.

■ Before dismounting tractor or performing any service or maintenance, disengage power to implement, lower the 3-point hitch and all raised components to the ground, operate valve levers to release any hydraulic pressure, set parking brake, stop engine, remove key, and unfasten seat belt.

■ Never go underneath equipment lowered to the ground or raised. Never place any part of the body underneath equipment or between moveable parts even when the engine has been turned off. Hydraulic system leak down, hydraulic system failures, mechanical failures or movement of control levers can cause equipment to drop or rotate unexpectedly and cause severe injury or death.

- Service work does not require going underneath.
- Read operator's manual for service instructions or have done by a qualified dealer.

### MAINTENANCE SAFETY

■ Before dismounting tractor or performing any service or maintenance, disengage power to implement, lower the 3-point hitch and all raised components to the ground, operate valve levers to release any hydraulic pressure, set parking brake, stop engine, remove key, and unfasten seat belt.

■ Never go underneath equipment lowered to the ground or raised. Never place any part of the body underneath equipment or between moveable parts even when the engine has been turned off. Hydraulic system leak down, hydraulic system failures, mechanical failures or movement of control levers can cause equipment to drop or rotate unexpectedly and cause severe injury or death.

- Service work does not require going underneath.
- Read operator's manual for service instructions or have done by a qualified dealer.

■ Always wear relatively tight and belted clothing to avoid entanglement in moving parts. Wear sturdy, rough-soled work shoes and protective equipment for eyes, hair, hands, hearing and head.

■ Ensure implement is properly attached, adjusted and in good operating condition.

■ Keep all persons away from operator control area while performing adjustments, service or maintenance.

■ Tighten all bolts, nuts and screws to torque chart specifications. Check that all cotter pins are installed securely to ensure equipment is in a safe condition before operating.

■ Ensure all safety decals are installed. Replace if damaged. (See Safety Decals section for location.)

### STORAGE

■ Block equipment securely for storage.

■ Keep children and bystanders away from storage area.

# NOTES

# SAFETY DECALS

## ATTENTION! BECOME ALERT! YOUR SAFETY IS INVOLVED!

**Replace Immediately If Damaged!**

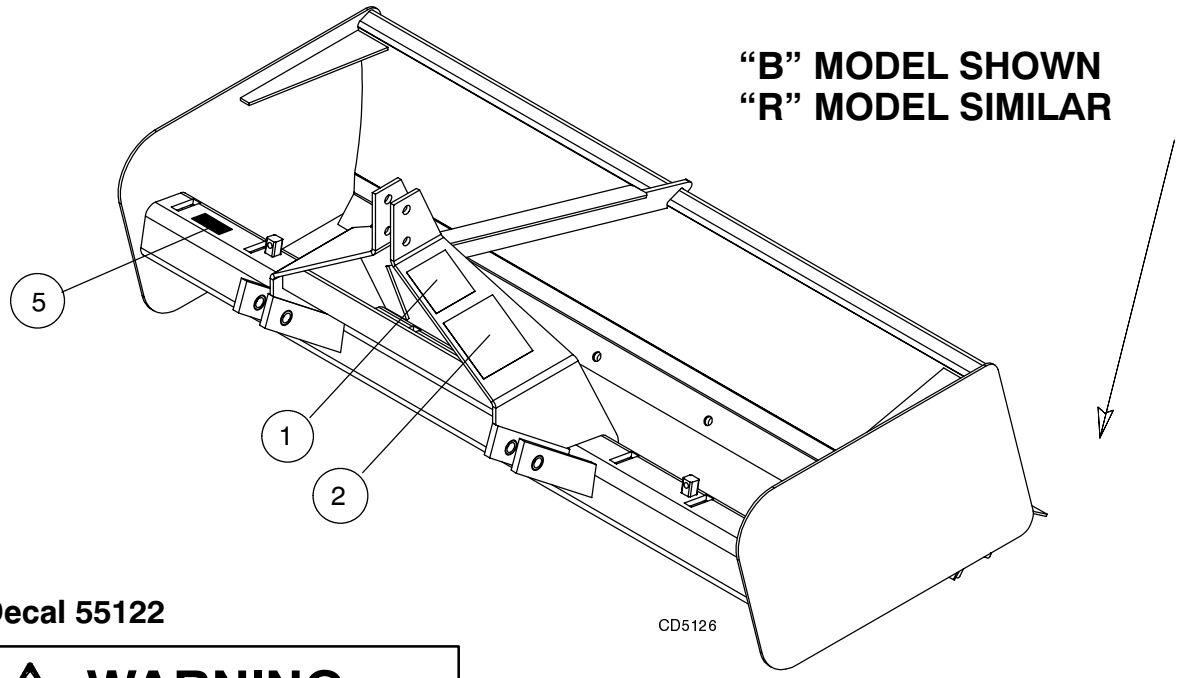


### 1 – Decal 55122

**WARNING**

**TO AVOID SERIOUS INJURY OR DEATH:**

- Read Operator's Manual before operating, servicing or repairing equipment. Follow all safety rules and instructions. (Manuals are available from dealer or, in the United States and Canada, call 1-800-319-6637.)
- Operate from tractor seat only.
- Lower equipment to ground, stop engine, remove key and set brake before dismounting tractor.
- Allow no children or untrained persons to operate equipment.

**FAILURE TO FOLLOW THESE INSTRUCTIONS CAN RESULT IN INJURY OR DEATH.**

55122–B

### 2 – Decal 55121

**WARNING**

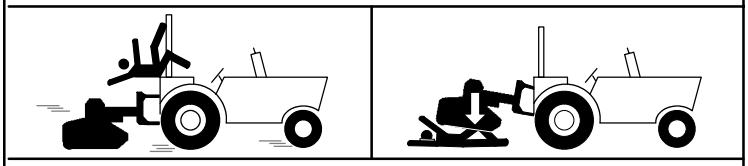

**FALLING OFF CAN RESULT IN BEING RUN OVER.**

- Tractor must be equipped with ROPS (or ROPS CAB) and seat belt. Keep foldable ROPS systems in "locked up" position at all times.
- Buckle Up! Keep seat belt securely fastened.
- Allow no riders.

**RAISED IMPLEMENT CAN DROP AND CRUSH.**

- Never go underneath raised implement which can drop from equipment or tractor 3-point hitch hydraulic leak down, hydraulic system failures, movement of control levers or mechanical linkage failures.
- Service work does not require going underneath implement. Read manual instructions.

**FALLING OFF OR GOING UNDERNEATH IMPLEMENT CAN RESULT IN SERIOUS INJURY OR DEATH.**

55121–B

### 5 – Serial Number Plate

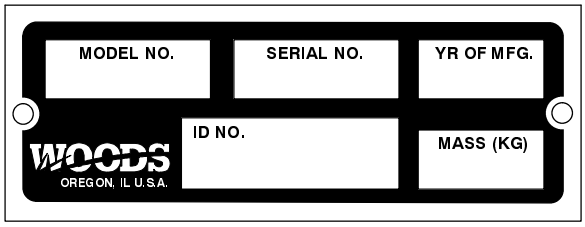

# SAFETY DECALS

## ⚠ ATTENTION! BECOME ALERT! YOUR SAFETY IS INVOLVED! ⚠

**Replace Immediately If Damaged!**

### ⚠ WARNING

**CHECK FOR PROPER TIRE CLEARANCES**

- Follow all manual instructions and safety rules.
- Before operating, check that scraper and scarifier teeth clear tractor tires.
- Position scarifier teeth to closest tire position and operate three point hitch through full range when checking for adequate tire clearance.
- Do not use scraper on tractors where tire contact is possible.

**FAILURE TO FOLLOW INSTRUCTIONS CAN RESULT IN INJURY OR DEATH.** 57502

**3 – Decal 57502**

## "SR" MODEL

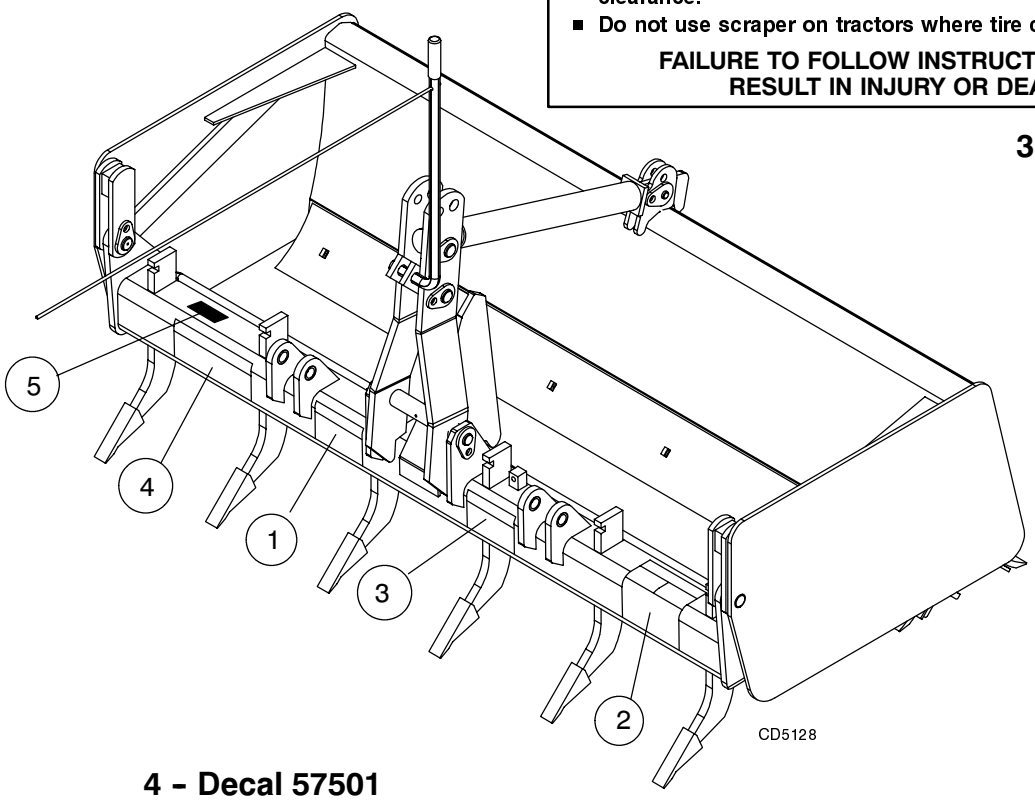


**4 – Decal 57501**

### ⚠ WARNING

**TO AVOID PINCH POINTS AND SERIOUS INJURY WHEN ROTATING SCARIFIER BAR TO RAISED OR LOWERED POSITION:**

- Follow all manual instructions and safety rules.
- Only rotate scarifier bar from tractor seat. Keep all other persons away.
- With the trip lever pulled forward, carefully raise three point hitch through entire range. Check for clearance with tractor and back of seat. Lever can be bent slightly to provide adequate clearance. Do not use box scraper on tractors where clearance cannot be obtained.
- To rotate scarifier bar to raised position:
  - Raise box scraper to transport position.
  - Pull rope to release trip lever.
- To rotate scarifier bar to lowered, operating position:
  - Lower box scraper just above ground level.
  - Pull and hold rope to keep trip lever in the forward position. This will cause scarifier teeth to rotate into contact with ground.
  - Slowly back up until scarifier bar rotates into the full locked operating position. 57501

# OPERATION

Safety is a primary concern in the design and manufacture of our products. Unfortunately, our efforts to provide safe equipment can be wiped out by a single careless act of an operator.

In addition to the design and configuration of equipment, hazard control and accident prevention are dependent upon the awareness, concern, prudence and proper training of personnel involved in the operation, transport, maintenance and storage of equipment.

It has been said *"The best safety device is an informed, careful operator."* We ask you to be that kind of an operator.

The operator is responsible for the safe operation of this equipment. Operators must be instructed in and be capable of the safe operation of the equipment, its attachments and all controls. Do not allow anyone to operate this equipment without proper instructions.

The box scrapers are designed for a wide range of applications: scarifying, scraping, leveling, grading and backfilling.

The safe operation of this equipment is the responsibility of the operator. The operator must be properly trained and qualified to use this equipment. The operator should be familiar with the box scraper, tractor and all safety practices before starting operation.

## PRE-OPERATION CHECK LIST

(OWNER'S RESPONSIBILITY)

___ Review and follow all safety rules and safety decal instructions on pages 7 through 9.

___ Check that all safety decals are installed and in good condition. Replace if damaged.

___ Check that all hardware and cotter pins are properly installed and secured.

___ Do not allow riders.

___ Check that equipment is properly and securely attached to tractor.

___ Make sure tractor ROPS or ROPS CAB and seat belt are in good condition. Keep seat belt securely fastened during operation to prevent falling off.

___ Check all lubrication points and grease as instructed in "Service, lubrication information".

## CONNECTING BOX SCRAPER TO TRACTOR (Figure 1)

The box scraper is compatible with Category 1 3-point tractors equipped with side swing type lower lift arms.

To avoid interference with the box scraper, adjust tractor drawbar to the shortest and highest position.

Attach the tractor's lower lift arms (3) to the box scraper and secure in place with Category 1 mounting pin (1) and lynch pin (2).

Attach the tractor's top link (4) to the top of the box scraper's mast and secure with the heavy-duty top link pin and retaining pin supplied with the top link.

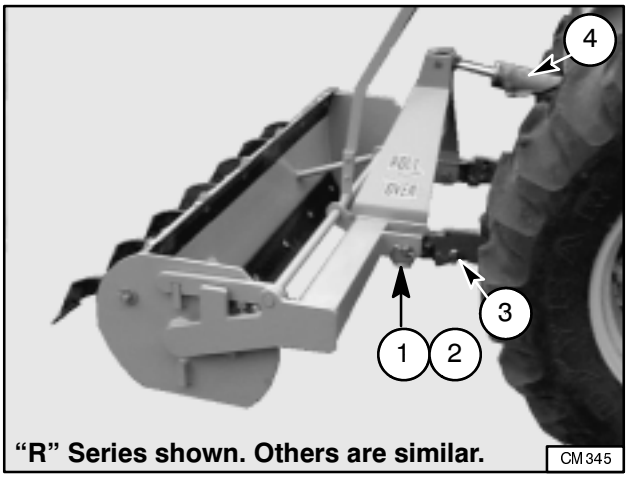


**"R" Series shown. Others are similar.**

1. Category I mounting pin
2. Lynch pin
3. Lower lift arm
4. Top link

**Figure 1**. Connecting Box Scraper to Tractor

### Top Link Adjustment

The box scraper is leveled by adjusting the length of the tractor's top link.

Shortening the top link will deepen the scarifier tooth penetration. Lengthening the top link will provide better scraping and leveling action. Experience will allow the operator to determine the best setting for the application being done.

## MECHANICAL TRIP MECHANISM

### "R" Series Rollover Box Scraper

The mechanical trip lever allows the rollover box scraper to be used for either scraping, scarifying or backfilling.

It may be necessary to attach a rope to the trip lever handle to activate the trip lever. Provide enough slack in the rope to prevent any interference between the tractor and box scraper during lifting and lowering.

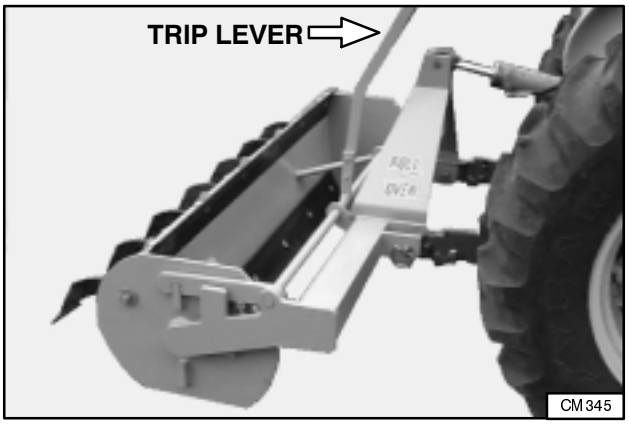


**Figure 2**. Scraping Position

Lower box scraper to the ground and activate the trip lever. Slowly back the tractor up to roll the box scraper to the scarifying position (Figure 3). The trip lever is spring-loaded and will automatically lock into the second position when aligned correctly.

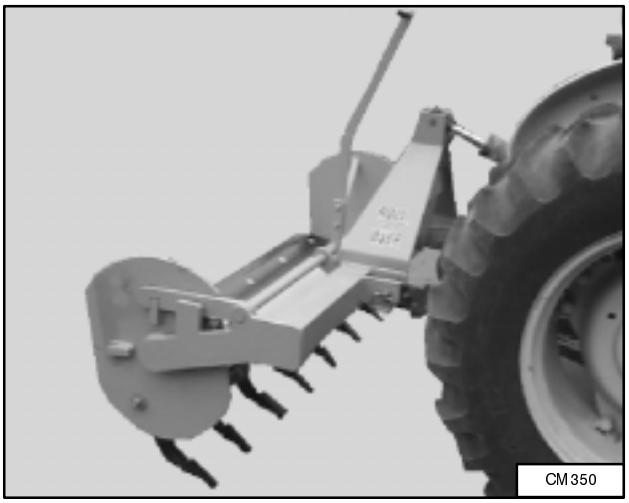


**Figure 3**. Scarifying Position

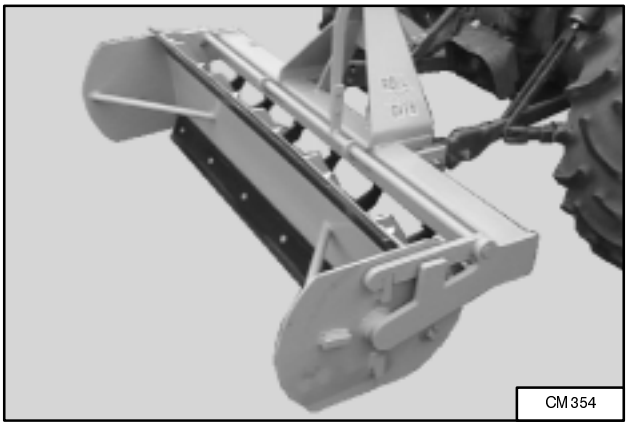


**Figure 4**. Backfill Position

To position box scraper in the backfill position (Figure 4), trip the lever while the unit is on the ground and slowly back up to roll the box scraper into the third position. Trip lever will automatically lock into the backfill position when lock is properly aligned.

To return to the scraping position (Figure 2), lower the box scraper to the ground, trip the lever, and slowly drive forward until the automatic lock engages into the scraping position.

## "SR" Series Box Scraper

The mechanical trip lever allows the box scraper's scarifying teeth to be automatically locked into the retracted position.

Raise box scraper to transport position. Pull and release the trip lever. The geometry of the box scraper will automatically pivot and lock the teeth into the retracted position. To extend the teeth, activate and hold the trip lever while the unit is on the ground and slowly back up until box scraper is in original position. Release the trip lever to lock box scraper in the operating position.

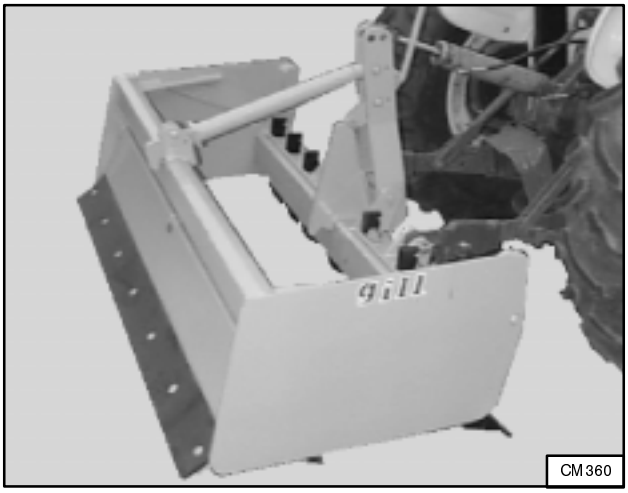


**Figure 5**. Scarifying Position

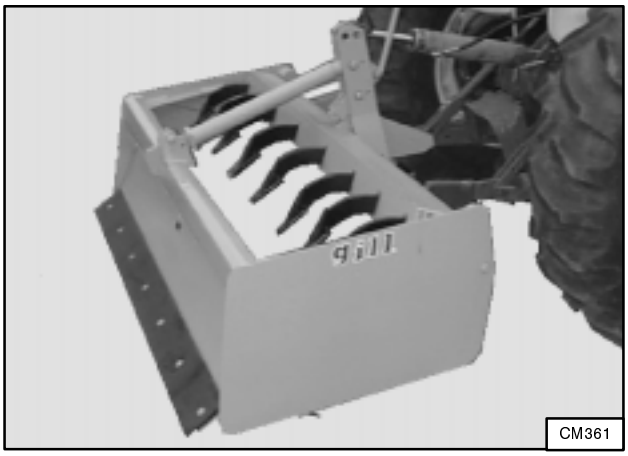


**Figure 6**. Retracted Position

## ⚠ WARNING

■ **Before operating, slowly raise box scraper to transport height to check for interference between the trip lever and the back of the tractor. The trip lever can be bent as necessary to provide adequate clearance in the raised position.**

■ **Never attach the box scraper release rope to the operator, the operator's clothing, or the tractor seat.**

Attach the trip lever rope to the tractor. Provide enough slack so box blade can be raised and lowered without the rope contacting 3-point hitch or other moving parts. Tie end of rope near operator's waist height to prevent operator entanglement. **Do not** tie rope to operator or operator's clothing.

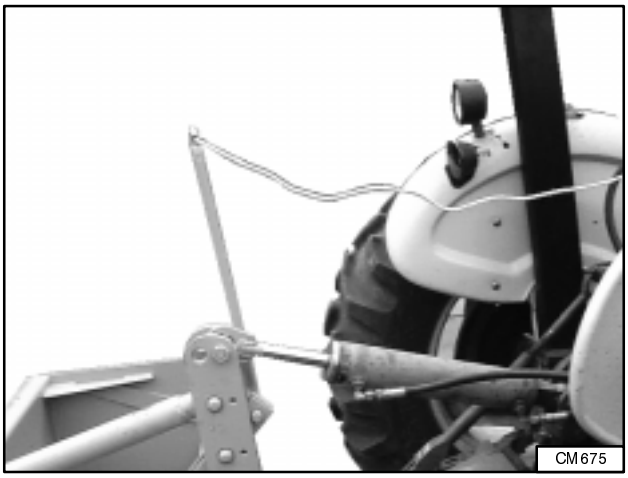


**Figure 7**. Trip Lever Rope Attachment

# OWNER SERVICE

The information in this section is written for operators who possess basic mechanical skills. Should you need help, your dealer has trained service technicians available. For your protection, read and follow all safety information in this manual.

## ⚠ CAUTION

■ **Always wear relatively tight and belted clothing to avoid entanglement in moving parts. Wear sturdy, rough-soled work shoes and protective equipment for eyes, hair, hands, hearing and head.**

## ⚠ WARNING

■ **Never go underneath equipment lowered to the ground or raised. Never place any part of the body underneath equipment or between moveable parts even when the engine has been turned off. Hydraulic system leak down, hydraulic system failures, mechanical failures or movement of control levers can cause equipment to drop or rotate unexpectedly and cause severe injury or death.**

- **Service work does not require going underneath.**
- **Read operator's manual for service instructions or have done by a qualified dealer.**

■ **Before dismounting tractor or performing any service or maintenance, disengage power to implement, lower the 3-point hitch and all raised components to the ground, operate valve levers to release any hydraulic pressure, set parking brake, stop engine, remove key, and unfasten seat belt.**

## ⚠ WARNING

■ **Keep all persons away from operator control area while performing adjustments, service or maintenance.**

### Scarifier Point Replacement (Figure 8)

Remove the worn tooth by driving a chisel between the shank (1) and tooth (2). Install replacement tooth and use a punch (3) to peen the tooth to the shank on both sides.

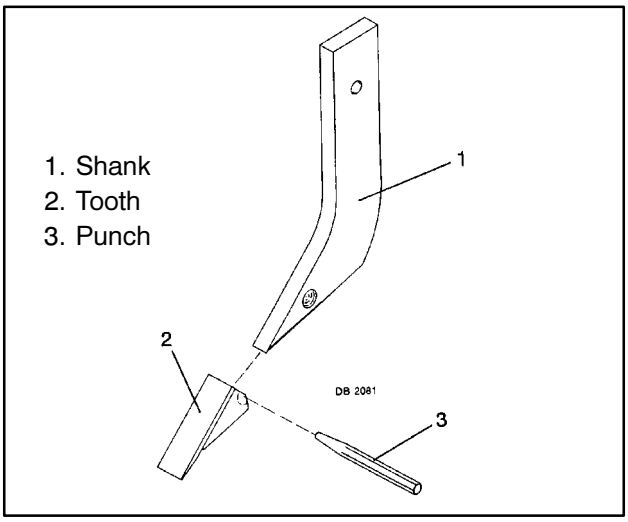


**Figure 8**. Scarifier Point Replacement

## Cutting Edge Replacement (Figure 9)

There are two 1/2" x 6" cutting edges used on the box scraper. They are interchangeable and reversible.

Remove the hex nuts (1) and plow bolts (2) from blade. Turn blade over and use new edge, or replace it if both edges have been used. Attach blade to box scraper and secure with plow bolts and hex nuts previously removed. Torque plow bolts to 175 lbs-ft.

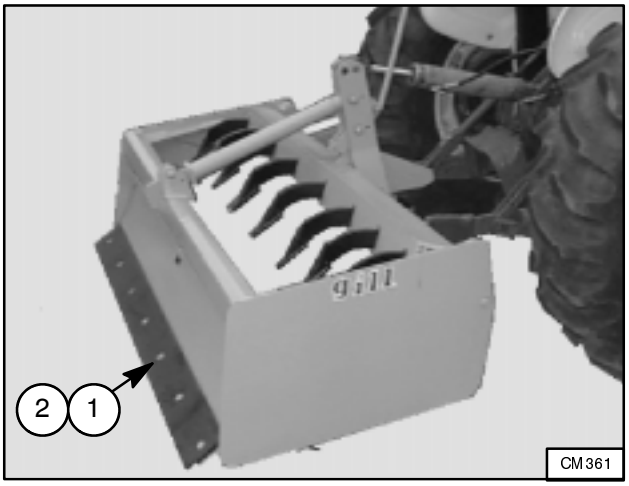


1. Hex nuts
2. Plow bolts

**Figure 9**. Cutting Edge Replacement

## Lubrication (Figure 10 & Figure 11)

The rollover and "SR" series box scrapers require lubrication to keep the pivot points in good working order.

Do not let excess oil build up or around parts, especially when operating in sandy areas. It is recommended that all fittings be lubricated daily or every eight hours of operation. Excessively wet or dry conditions may require more frequent lubrication.

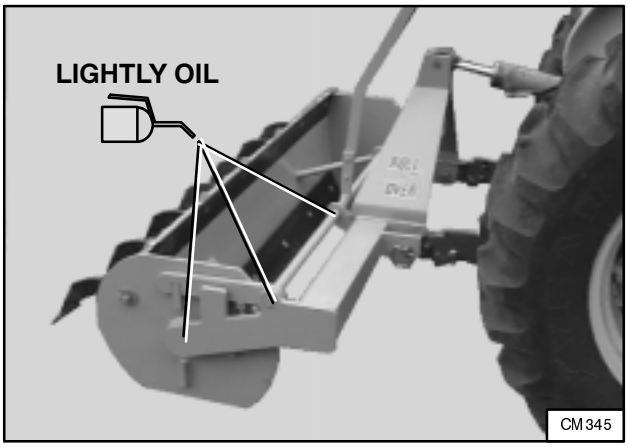


**Figure 10**. "R" Series

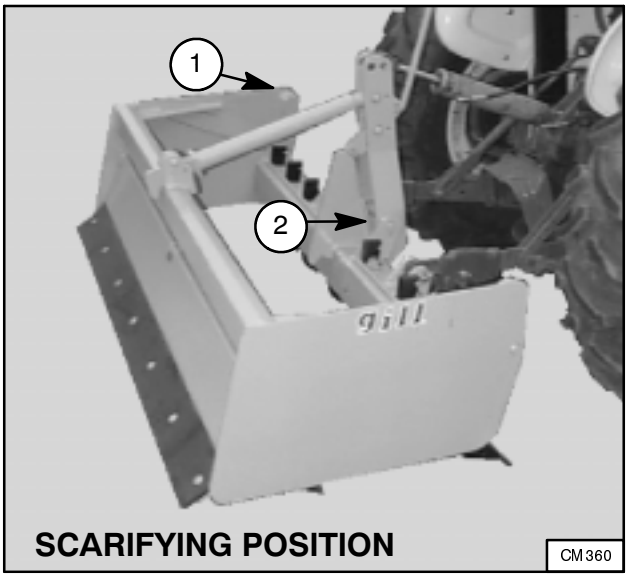


1. End pivot
2. Center pivot

**Figure 11**. "SR" Series

# NOTES

# PARTS

## CONTACT YOUR WOODS DEALER TO ORDER PARTS

### To locate your nearest dealer:

- Check the Dealer Locator at www.woodsonline.com, or
- In the United States and Canada, phone 1-800-319-6637
- Outside the United States, phone 1-815-732-9509 plus the appropriate international dialing code for the USA

### To order correct parts, provide this information to your dealer:

- Model Number: _____
- Serial Number: _____

# WARRANTY

Please enter information below and **SAVE FOR FUTURE REFERENCE.**

Date Purchased: _____ From (Dealer): _____

Model Number: _____ Serial Number: _____

WOODS warrants each new WOODS product to be free from defects in material and workmanship. This warranty is applicable only for the normal service life expectancy of the machine or components, not to exceed twelve consecutive months from the date of delivery of the new WOODS product to the original purchaser.

Genuine WOODS replacement parts and components will be warranted for 90 days from date of purchase, or the remainder of the original equipment warranty period, whichever is longer.

Under no circumstances will it cover any merchandise or components thereof, which, in the opinion of the company, has been subjected to negligent handling, misuse, alteration, an accident, or if repairs have been made with parts other than those obtainable through WOODS.

The company in no way warrants engines, batteries, tires or other trade accessories since these items are warranted separately by their respective manufacturers.

Our obligation under this warranty shall be limited to repairing or replacing, free of charge to the original purchaser, any part that in our judgement shall show evidence of such defect, provided further that such part shall be returned within thirty (30) days from date of failure to WOODS, routed through the dealer and distributor from whom the purchase was made, transportation charges prepaid.

This warranty shall not be interpreted to render us liable for injury or damages of any kind or nature to person or property. This warranty does not extend to loss of crops, loss because of delay in harvesting, or any expense or loss incurred for labor, supplies, substitute machinery, rental or for any other reason.

Except as set forth above, WOODS SHALL HAVE NO OBLIGATION OR LIABILITY OF ANY KIND ON ACCOUNT OF ANY OF ITS EQUIPMENT AND SHALL NOT BE LIABLE FOR SPECIAL OR CONSEQUENTIAL DAMAGES. WOODS MAKES NO OTHER WARRANTY, EXPRESS OR IMPLIED, AND, SPECIFICALLY, WOODS DISCLAIMS ANY IMPLIED WARRANTY OF MERCHANTABILITY OR FITNESS FOR A PARTICULAR PURPOSE. SOME STATES OR PROVINCES DO NOT PERMIT LIMITATIONS OR EXCLUSIONS OF IMPLIED WARRANTIES OR INCIDENTAL OR CONSEQUENTIAL DAMAGES, SO THE LIMITATIONS OR EXCLUSIONS IN THIS WARRANTY MAY NOT APPLY.

This warranty is subject to any existing conditions of supply which may directly affect our ability to obtain materials or manufacture replacement parts.

WOODS reserves the right to make improvements in design or changes in specifications at any time, without incurring any obligations to owners of units previously sold.

No one is authorized to alter, modify, or enlarge this warranty nor the exclusions, limitations and reservations.

**Woods Equipment Company**

2606 Illinois Route 2 South
Post Office Box 1000
Oregon, Illinois 61061

815-732-2141 tel
815-732-7580 fax

WOODS

WOODS
DUAL
GANNON
ALLOWAY
GILL
GANNONBMP
WAIN ROY

# PART NUMBER

# 51868

**Woods Equipment Company**

2606 Illinois Route 2 South
Post Office Box 1000
Oregon, Illinois 61061

815-732-2141 tel
815-732-7580 fax

WOODS