YANMAR

PARTS CATALOG

Published 2009/12 (Dec.)

0CT10-G22801

PREFACE

This parts catalog carries all parts incorporated in YANMAR Model YM186/YM186D tractors manufactured since February, 1980

Each illustration corresponds to the parts list on the following page.

When ordering parts, clearly write down the tractor model, as well as the name and number of each part in your order sheet. This will help insure reliable delivery of the parts you have ordered.

パーツカタログの見方

1．このパーツカタログに記載されている部品は、必ずしも標準装備部品ではありません。
2．部品変更は、予告なく行うことがあります。
3．パーツカタログリスト様式

0CF10-J21601　29. FO噴射ポンプ(ブーコン用)

(A)=4JH-DT　(B)=4JH-DTZ　(C)=4JH-DTZP　(D)=4JH-DTZA　(E)=4JH-DTZY　(F)=

① No.	② ﾚﾍﾞﾙ	部品番号	部品名	(A)	(B)	(C)	(D)	(E)	(F)	③ I	⑤ R
1	1	729595-51390	FOﾎﾟﾝﾌﾟ ASY(ﾌﾞｰｺﾝﾂｷ	1	1	1	1	1			1
1-1	1	729595-51391	FOﾎﾟﾝﾌﾟ ASY(ﾌﾞｰｺﾝﾂｷ	1	1	1	1	1		N	1
	(A=E00185)	(B=E00200)									
3	2	26022-060162	ﾅﾍﾞｺﾈｼﾞ(ﾊﾞﾈ6X16	9	9	9	9	9			
3-1 ④	2	26022-060162	ﾅﾍﾞｺﾈｼﾞ(ﾊﾞﾈ6X16	4	4	4	4	4		K	
	(A=E00156)	(B=E00156)	(C=E00156) (D=E00156)	(E=E00156)							
4	2	129470-51040	ｶﾑｼｬﾌﾄ	1	1	1	1	1			
5	2	122710-51050	ﾍﾞｱﾘﾝｸﾞ(HR30203J)	2	2	2	2	2			
6	2	129470-51060	ﾍﾞｱﾘﾝｸﾞｵｻｴ	1	1	1	1	1			

備考
1) ブーストコンペンセータ付、4JH-DT、4JH-DTZ とも
E00155までは特別注文仕様とします。

① 見出しNo.(REF.No.)

リスト頁の見出No.とイラスト図番の末尾が一致しない場合があります。

(例)イラスト図番　　リスト頁の見出No.

1　　1(変更前)　→ 1-1 (変更後)

互換性記号 N、R、K の場合は新部品のイラストを省略している場合があります。

② レベル(LEV.)

レベル

1･･･表示している数字はレベルを表し、親子の関係を示します。(1 は親部品です)
2･･･は、1 に含まれる子部品です。
3･･･は、2 に含まれる子部品(1 から見れば孫部品)です。
(注)非販売部品のイラストは一部展開しておりますが、リストには記載しておりません。

③ 互換性区分

部分変更が行われた場合、その部品に対して下記の互換性記号が表示されます。

記号	互換性	内　容
N	旧 ←○ ×→ 新	新部品は、旧部品に対して互換性有り、その逆は無し。
Q	旧 ←× ○→ 新	新部品は、旧部品に対して互換性無し、その逆は有り。
R	旧 ←○ ○→ 新	新・旧部品の双方に対して互換性有り。
S	旧 ←× ×→ 新	新・旧部品の双方に対して互換性無し。
W		新規追加となった部品。
Z		廃止された部品
F		単品では、互換性無し。但し関連部品セットにて互換性有り。
K		使用個数のみの変更

④ 実施記号

部品が変更された時には、適用される商品形式の実施号機が(A)～(F)欄毎に表示されます。

商品記号	商品No.	商品記号	商品No.
C	クラッチNo.コンプレッサーNo.	F	本機No.(農機商品)
D	ドライブNo.	M	本機No.
E	エンジンNo.	注1)※	西暦年月

注1)記号の後に西暦年月を記載している事もあります。 (例) ※1990.02
注2)実施号機が×××は、部品変更の予告又は、実施号機が確定できなかった部品です。
注3)(A=E00185)は、A欄の商品形式(=4JH－DT)の部品変更実施号機は、E(=エンジンNo.)が
00185号機以降であることを示します。

⑤ 備考(リマークス)区分

R･･･欄に数字又は、英字(記号)を表示してあります。
イラスト下段に上記の記号と同一記号を表記して当該部品に対するコメント(備考)を表示しています。

COLOURING

Some parts are painted in colors according to the models, specifications, and their destinations. In this parts catalog, colouring is classified into ten variations and shown in abbreviated codes as below.

Colour code	Color
K	Metallic calm green
M	Silver
P	Green
Q	Cream
R	Red
X	Black
Y	Yellow
U	Plating

The colour of a part is denoted by the colour code suffixed to an ordinary part number :

Example : Fender (L) 194195-62110-R → Red

When ordering painted parts, please designate part colours in your order sheet by suffixing one of these color codes to the part number you want to order.

LOCATION OF ENGINE LABEL & TRACTOR LABEL

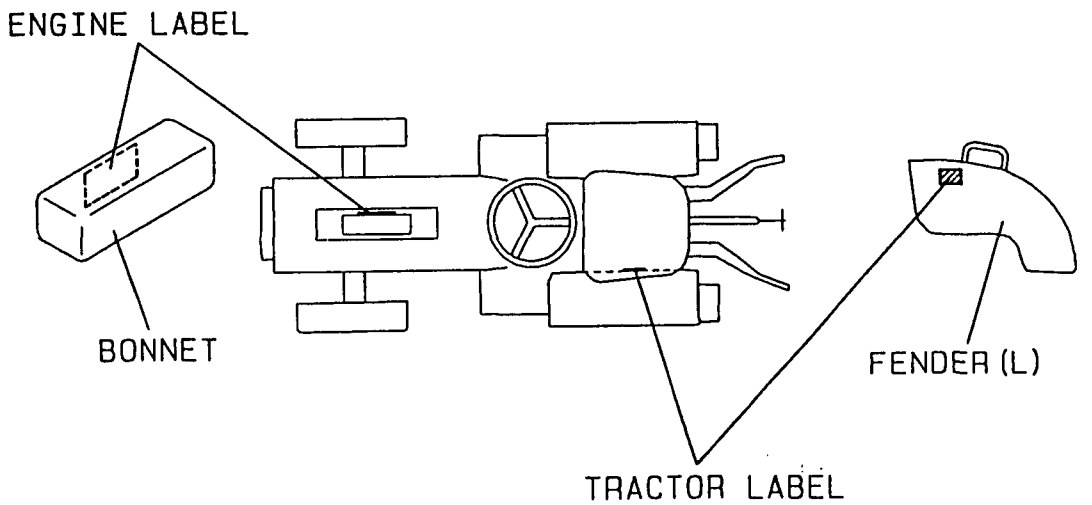

Classification of specification code

A: America, Canada, South Africa, Australia & New Zealand

E: Europe (Bergium & Holland)

F: France, Bergium & Holland

Scan: Scandinavia (Norway & Denmark)

U: England, Switzerland, Denmark & Norway

Stan: Standard (Other country)

ENGINE SECTIONAL VIEW (1)

[Horizontal Section]

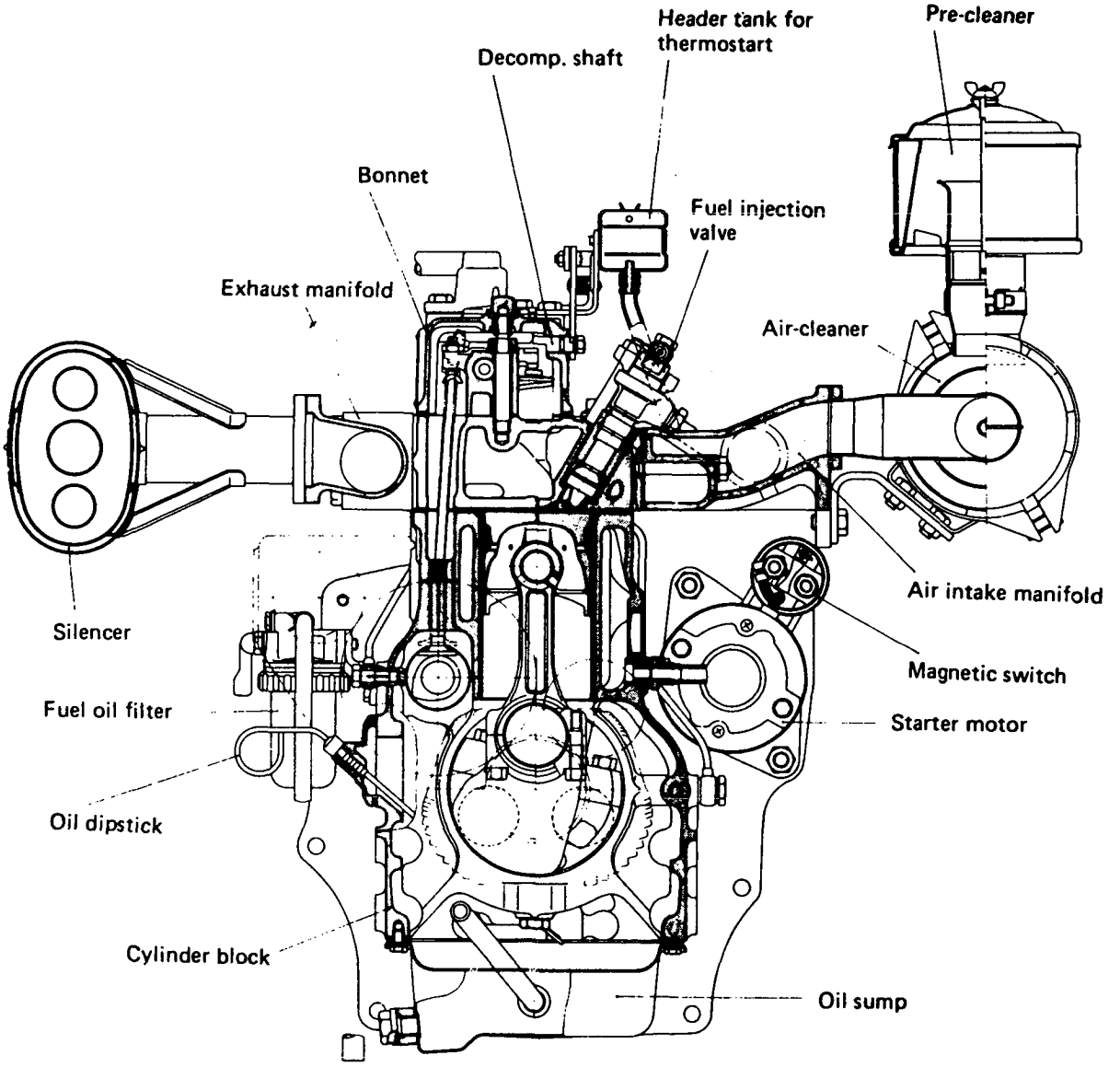

ENGINE SECTIONAL VIEW (2)

[Vertical Section]

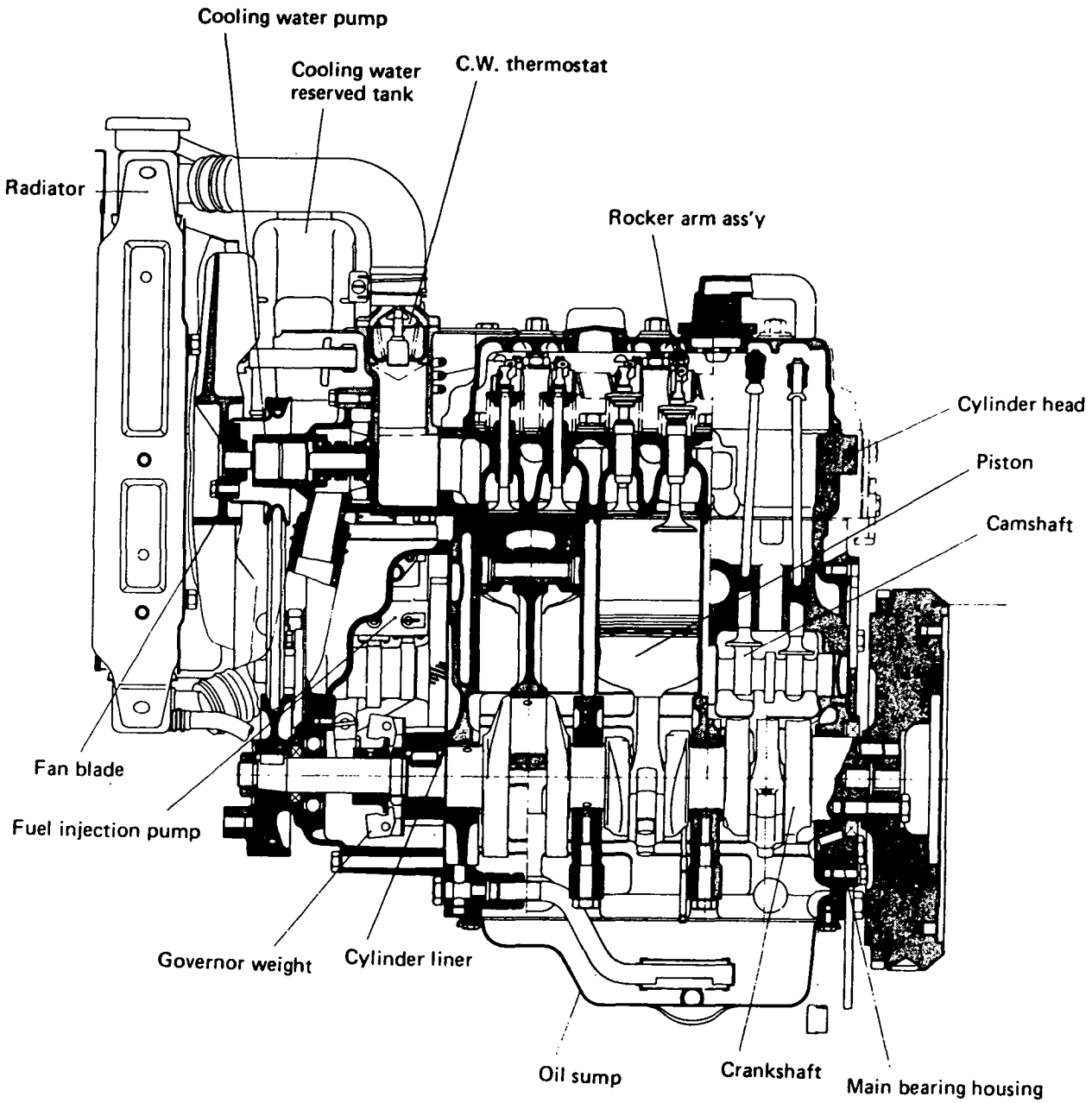

POWER TRANSMISSION STRUCTURAL DRAWING FOR MODEL YM186/YM186D

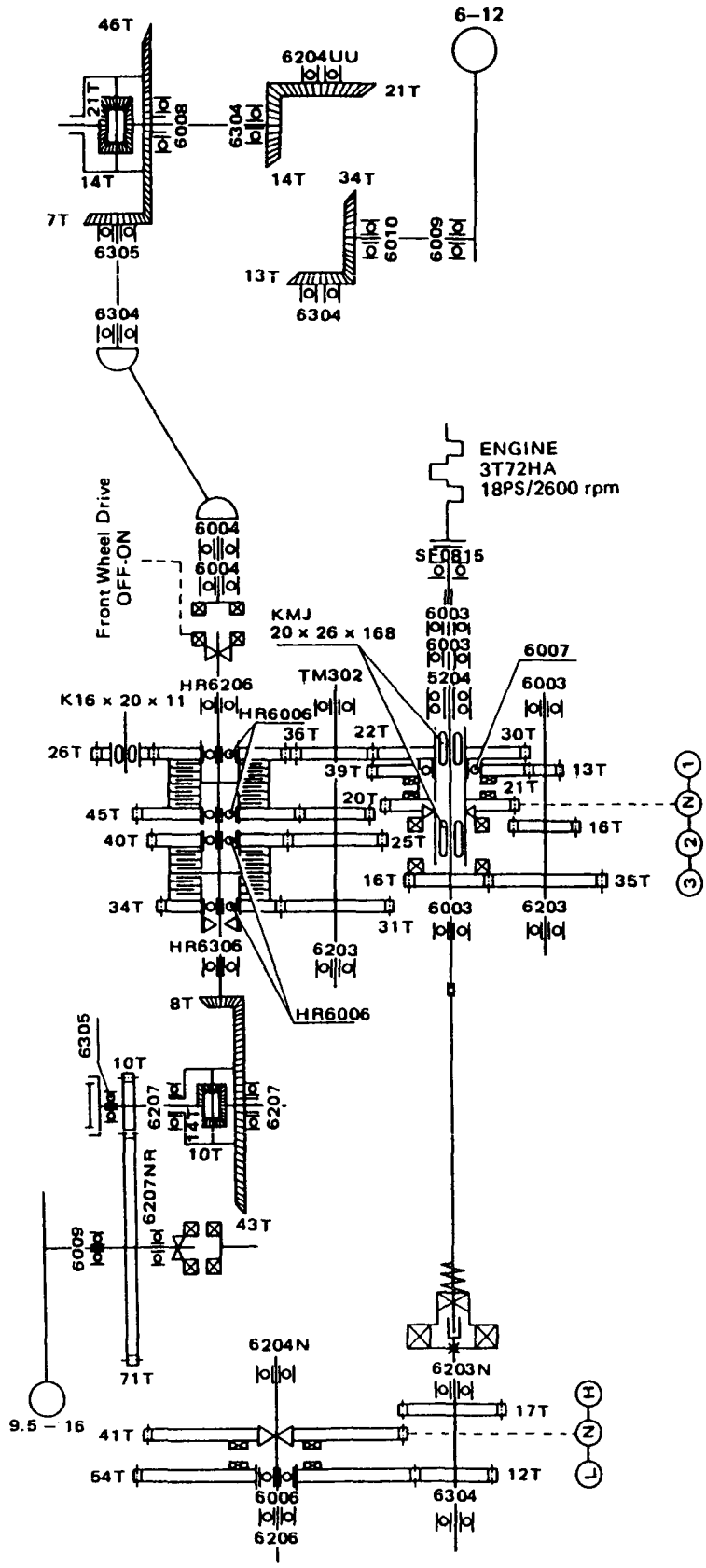

TRAVELLING TRANSMISSION SECTIONAL VIEW (1)

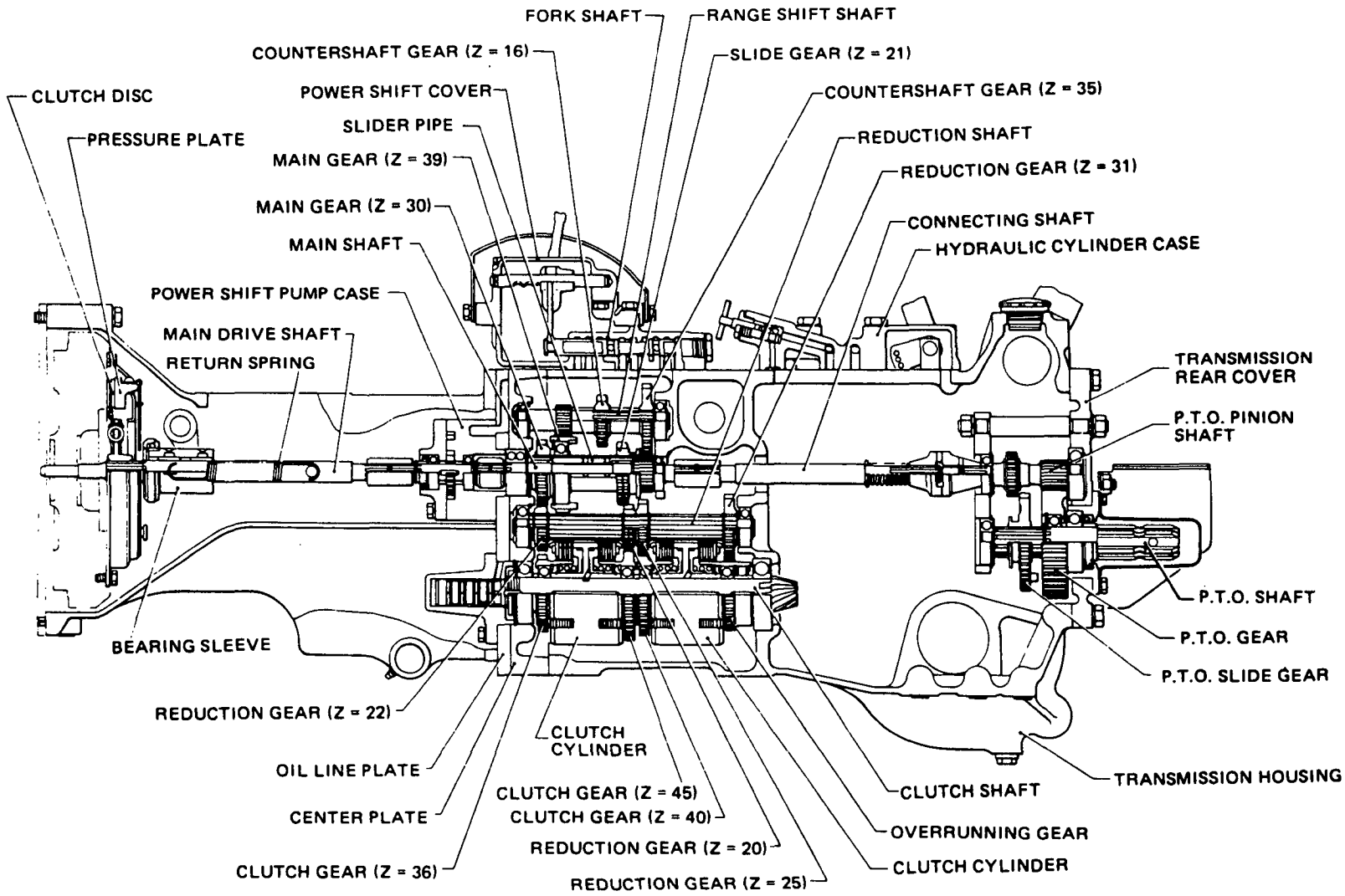

TRAVELLING TRANSMISSION SECTIONAL VIEW (2)

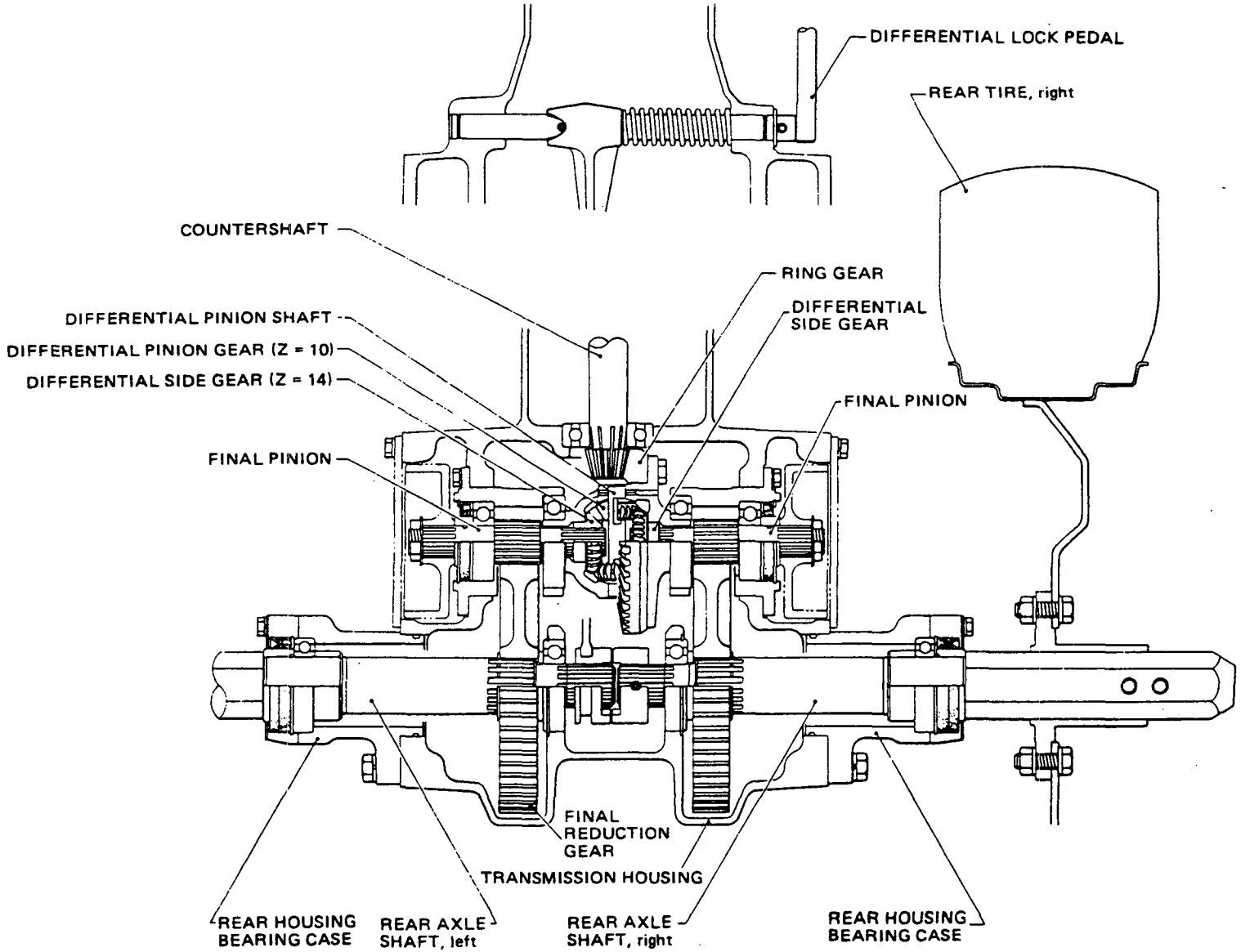

TRAVELLING FRONT DRIVING SECTIONAL VIEW

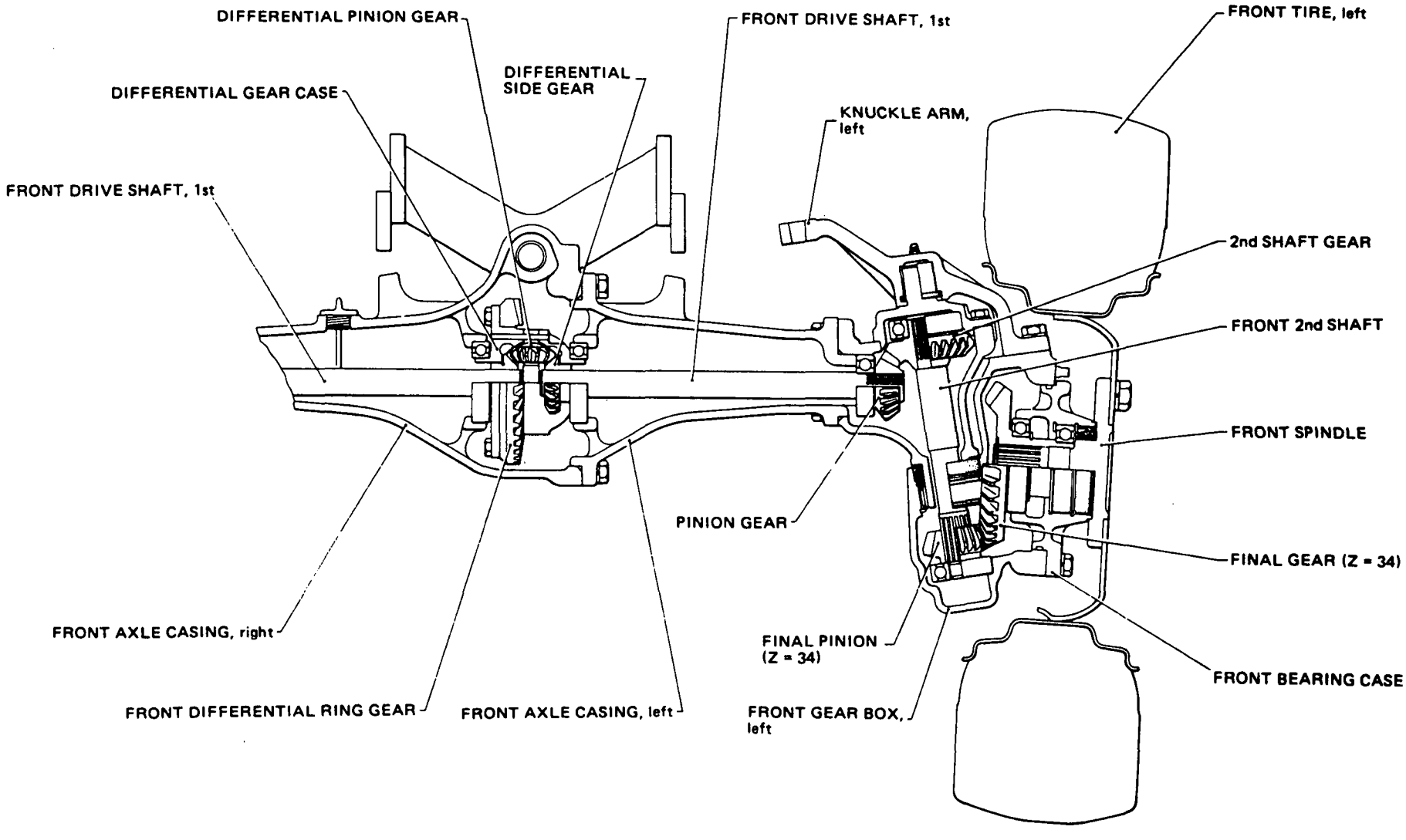

CONTENTS

MODEL : YM186(D)(B3730)
PC NO : 0CT10-G22801

Fig.No. GROUP NAME

ENGINE 3T72HA/F/S

1. CYLINDER BLOCK
2. GEARS HOUSING
3. CYLINDER HEAD & BONNET
4. AIR CLEANER
5. SILENCER
6. CAMSHAFT
7. CRANKSHAFT & FLYWHEEL
8. PISTON & CONNECTING ROD
9. LUB. OIL SYSTEM
10. COOLING WATER SYSTEM
11. FUEL INJECTION PUMP
12. FUEL INJECTION VALVE
13. FUEL OIL SYSTEM
14. GOVERNOR
15. ELECTRIC STARTING DEVICE
16. THERMOSTART
17. LABELS
18. STARTER(12V-1.3KW)
19. GENERATOR
20. GENERATOR (FOR 3T72HA-S)
21. GASKET SET (FOR ENGINE)
22. REPAIR KIT (FOR ENGINE)

CHASSIS YM186(D)

23. THROTTLE (EXCEPT ENGLAND)
24. THROTTLE (ENGLAND)
25. FUEL TANK
26. FRONT AXLE BRACKET (U.S.A.)
27. FRONT AXLE BRACKET (FRANCE)

Fig.No. GROUP NAME

28. FRONT AXLE BRACKET (ENGLAND)
29. FRONT AXLE (FOR YM186)
30. CASING OF FRONT AXLE (YM186D)
31. PROPELLER SHAFT & F. AXLE GEAR
32. TIE-ROD OF FRONT AXLE (YM186D)
33. STEERING
34. CLUTCH HOUSING
35. TRANSMISSION HOUSING(EX.ENGLAN
36. TRANSMISSION HOUSING(ENGLAND)
37. CENTER PLATE
38. POWER SHIFT PUMP
39. REGULATOR
40. MAIN DRIVE GEARS
41. SHAFT FOR POWER SHIFT CLUTCH
42. RANGE SHIFT SHAFT
43. FLOOR SHIFT & SHIFT LEVER
44. COLUMN SHIFT
45. P.T.O. SHIFT LEVER
46. FRONT DRIVE (FOR YM186D)
47. RING GEARS
48. REAR HOUSING
49. REAR AXLE SHAFT
50. BRAKES
51. HYDRAULIC ADAPTER(OPTIONAL)
52. HYDRAULIC CYLINDER CASE
53. CONTROL VALVE
54. HYDRAULIC CONTROL LEVER
55. HYDRAULIC PIPES
56. ELECTRIC PARTS (FLOOR:U.S.A.)
57. ELECTRIC PARTS (COLUMN:U.S.A.)

CONTENTS

MODEL : YM186(D)(B3730)
PC NO : 0CT10-G22801

Fig.No.	GROUP NAME
58.	ELECTRIC PARTS (FLOOR:FRANCE)
59.	ELECTRIC PARTS (FLOOR:ENGLAND)
60.	HOOD (U.S.A.)
61.	HOOD (FRANCE)
62.	HOOD (ENGLAND)
63.	FENDER (U.S.A.)
64.	FENDER (FRANCE)
65.	LABELS (FLOOR SHIFT:U.S.A.)
66.	LABELS (COLUMN SHIFT:U.S.A.)
67.	LABELS (FLOOR SHIFT:ENGLAND)
68.	LABELS (FLOOR SHIFT:FRANCE)
69.	LABELS (COLUMN SHIFT:FRANCE)
70.	3-POINT HITCH (FLOOR SHIFT)
71.	3-POINT HITCH(COLUMN SHIFT:USA
72.	DRAWBAR (EXCEPT ENGLAND)
73.	DRAWBAR (ENGLAND)
74.	FRONT POWER TAKE OFF
75.	TIRES (2-WHEEL DRIVE:U.S.A.)
76.	TURF-TIRES(2-WHEEL DRIVE:USA)
77.	TIRES (4-WHEEL DRIVE:U.S.A.)
78.	TURF-TIRES(4-WHEEL DRIVE:USA)
79.	HEATER & FRONT WEIGHT(USA ONLY
80.	TIRES(2-WHEEL DRIVE:NEW ZEAL.)
81.	TURF-TIRES(2-WHEEL DRIVE:N.Z.)
82.	TIRES(4-WHEEL DRIVE:NEW ZEAL.)
83.	TURF-TIRES(4-WHEEL DRIVE:N.Z.)
84.	TIRES (2-WHEEL DRIVE:FRANCE)
85.	TURF-TIRES(2-WHEEL DRIVE:FR.)
86.	TIRES (4-WHEEL DRIVE:FRANCE)
87.	TURF-TIRES(4-WHEEL DRIVE:FR.)

Fig.No.	GROUP NAME
88.	REAR WHEEL & FRONT WEIGHT
89.	WORKING LIGHT (OPTIONAL PARTS)
90.	TOOLS (OPTIONAL PARTS)
91.	ROLL BAR (USA ONLY:OPTIONAL)

Fig.1. CYLINDER BLOCK

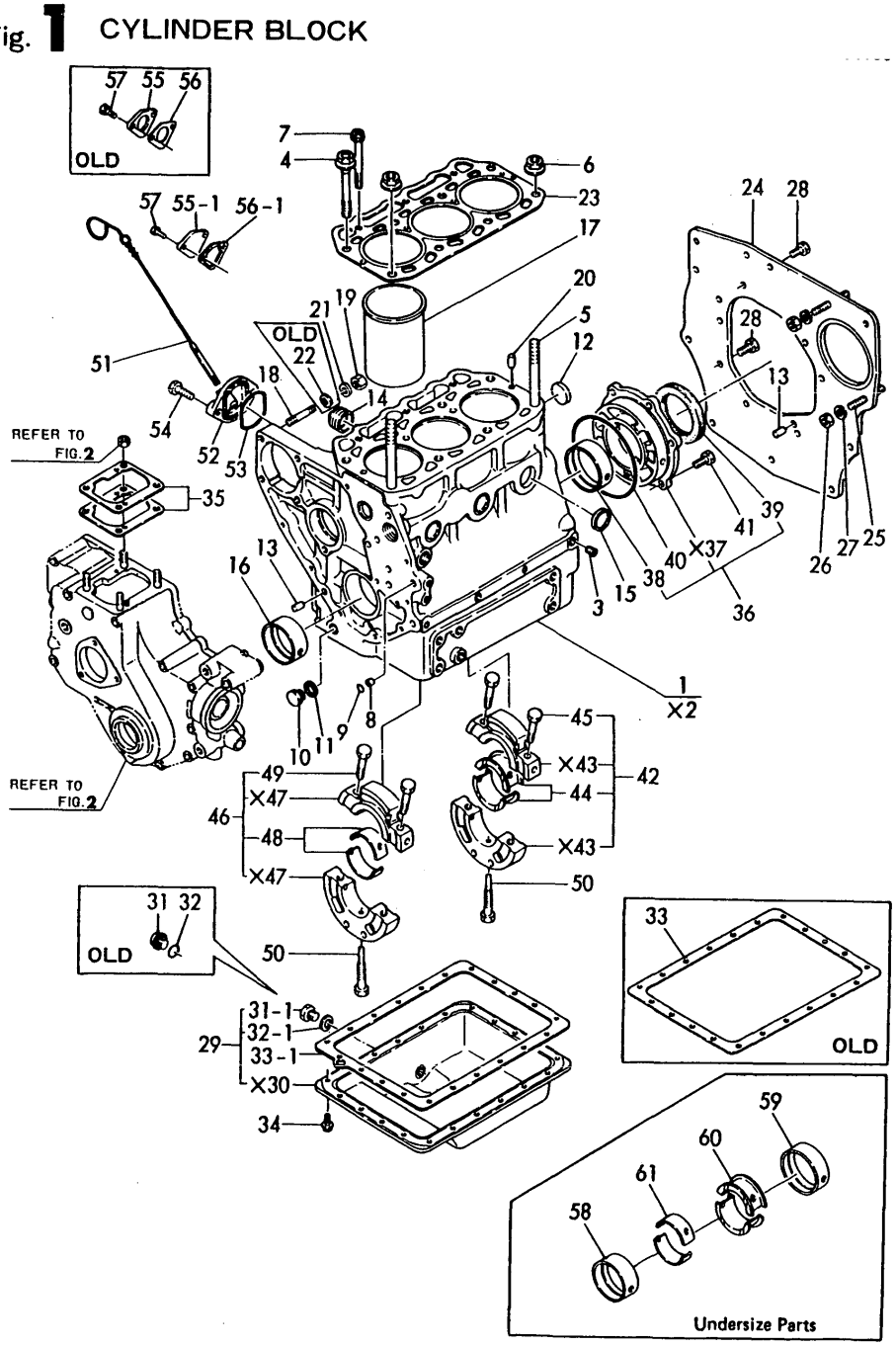

1. CYLINDER BLOCK

(A)=3T72HA (D)=
(B)=3T72HA-F (E)=
(C)=3T72HA-S (F)=

REF.	LEV.	PARTS NO.	DESCRIPTION	Q'TY (A)	(B)	(C)	(D)	(E)	(F)	I	R
1	1	721454-01560	BLOCK ASSY, CYLINDER	1							
1-1	1	721454-01561	BLOCK ASSY, CYLINDER	1						F	1
	(A=E/#200317)										
1-2	1	721454-01562	BLOCK ASSY, CYLINDER	1	1					N	2
	(A=*1981.03)										
1-3	1	721454-01563	BLOCK ASSY, CYLINDER	1	1	1				N	
	(A=*1982.08)	(B=*1982.08)									
3	2	124060-01050	PLUG, PT1/8	7	7	7					
4	2	121450-01203	BOLT, CYL. HEAD	6	6	6					
5	2	121450-01210	STUD, CYL. HEAD	2	2	2					
6	2	121450-01220	NUT, CYL. HEAD	2	2	2					
7	2	121450-01231	BOLT, CYL. HEAD	3							
7-1	2	129350-01230	BOLT, CYL. HEAD	3	3	3				S	2
	(A=*1981.03)										
8	2	105225-01900	GUIDE, O-RING	2							
8-1	2	124085-01900	GUIDE, O-RING	2	2	2				R	
	(A=*1981.)										
9	2	24311-000100	O-RING 1A P-10.0	2	2	2					
10	2	121450-01960	PLUG PF1/4	1	1	1					
11	2	121450-01980	GASKET	1	1	1					
12	2	121450-01990	PLUG 30	1	1	1					
13	2	22312-080160	PARALLEL PIN 8X 16	3	3	3					
14	2	121750-01920	PLUG	2	2						
14-1	2	171051-01921	PLUG	2	2	2				N	
	(A=*1982.08)	(B=*1982.08)									
15	2	27241-300000	PLUG 30	5	5	5					
16	2	121450-02100	MAIN BEARING	1	1	1					
17	2	121450-01100	LINER, CYLINDER	3	3	3					
18	2	26216-080302	STUD M 8X 30 PLATED	4	4	4					
19	2	26716-080002	NUT M 8	4	4	4					
20	2	22351-060012	SPRING PIN 6X12	2	2	2				W	
	(A=*1982.12)	(B=*1982.12)									
21	2	22217-080000	SPRING WASHER 8	4	4	4					
22	2	22137-080000	WASHER 8, POLISHED	4	4					Z	
	(A=*)	(B=*)									
23	1	121450-01330	GASKET, CYL. HEAD	1							
23-1	1	121450-01331	GASKET, CYL. HEAD	1	1					N	
	(A=E/#201068)										
23-2	1	121000-01330	GASKET, CYL. HEAD	1	1	1				N	
	(A=E/# A5547)	(B=E/# A5547)									
24	1	121470-01601	FLANGE, MOUNTING	1	1	1					
25	1	121450-01650	BOLT	2	2	2					
26	1	26706-100002	NUT M10	2	2	2					
27	1	22217-100000	SPRING WASHER 10	2	2	2					
28	1	26206-100202	BOLT M10X20	10	10	10					
29	1	721450-01540	SUMP ASSY, LUB OIL	1	1	1					
31	2	124060-01640	PLUG M12	1							
31-1	2	104200-55080	PLUG, DRAIN	1	1	1				F	3
	(A=E/#200995)										
32	2	24311-000140	O-RING 1A P-14.0	1							
32-1	2	43400-500450	SEAL WASHER 12	1	1	1				S	3

N:Old $\frac{\text{Yes}}{\text{No}}$ New, Q:Old $\frac{\text{No}}{\text{Yes}}$ New, R:Old $\frac{\text{Yes}}{\text{Yes}}$ New, S:Old $\frac{\text{No}}{\text{No}}$ New, W:Add, Z:Discontinued, F:Interchangeable by set, K:Q'ty Change

++ CONTINUE ++

(C)Copy Rights YANMAR CO.,LTD.

Fig.1. CYLINDER BLOCK

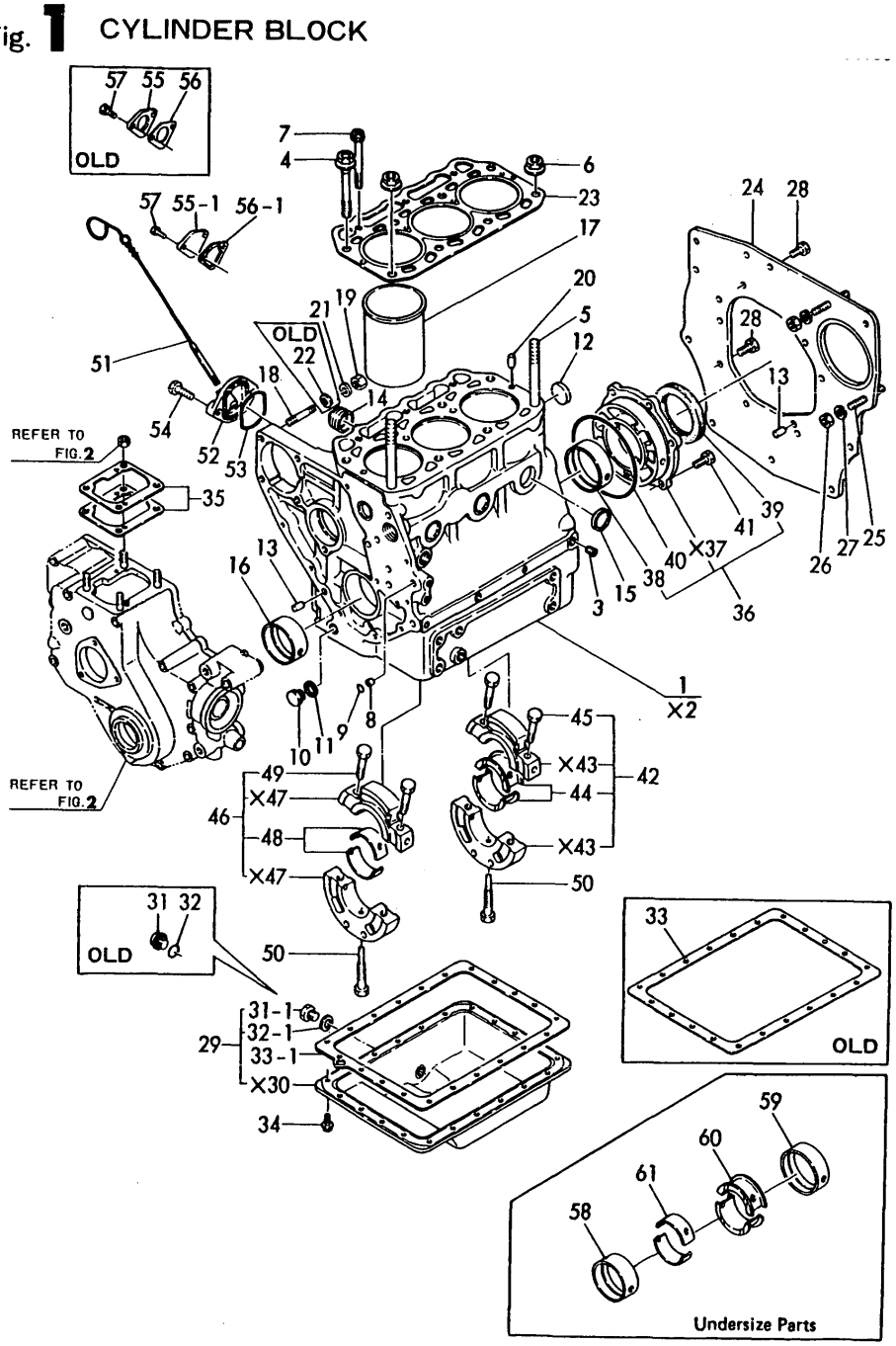

1. CYLINDER BLOCK

(A)=3T72HA (D)=
(B)=3T72HA-F (E)=
(C)=3T72HA-S (F)=

REF.	LEV.	PARTS NO.	DESCRIPTION	Q'TY (A)	(B)	(C)	(D)	(E)	(F)	I	R
(A=E/#200995)											
33	1	121450-01751	GASKET, OIL SUMP	1							
33-1	1	121000-01750	GASKET, OIL SUMP	1	1	1				N	
(A=*1980.05)											
34	1	121450-01710	BOLT	21	21						
34-1	1	26106-060082	BOLT M 6X 8 PLATED	21	21	21				N	
(A=E/# C1640) (B=E/# C1640)											
35	1	121450-01951	SHIM SET	1	1	1					
36	1	721450-02500	HOUSING ASSY,BEARING	1	1	1					
38	2	121450-02110	MAIN BEARING	1	1	1					
39	2	124450-02220	SEAL HTC60 82 9, OIL	1	1						
39-1	2	124085-02220	SEAL, OIL	1	1	1				N	
(A=*1980.) (B=*1980.)											
40	1	105225-02020	O-RING	1	1	1					
41	1	26013-080202	BOLT W/WASHER M8X20	6	6	6					
42	1	721450-02611	HOUSING ASSY	1	1						
42-1	1	721450-02612	HOUSING ASSY,BEARING	1	1	1				N	
(A=*1982.10) (B=*1982.10)											
44	2	121450-02160	MAIN BEARING (1)	1	1	1					
45	2	121450-02071	BOLT	2	2	2					
45-1	2	121450-02072	BOLT	2	2	2				S	
(A=*1982.10) (B=*1982.10)											
46	1	721450-02621	HOUSING ASSY	1	1						
46-1	1	721450-02622	HOUSING ASSY,BEARING	1	1	1				N	
(A=*1982.10) (B=*1982.10)											
48	2	121450-02170	MAIN BEARING (2)	1	1	1					
49	2	121450-02071	BOLT	2	2	2					
50	1	105225-02300	BOLT	2	2	2					
51	1	121450-34800	DIPSTICK	1							
51-1	1	121470-34800	DIPSTICK	1	1					N	
(A=*1980.11)											
51-2	1	121467-34800	DIPSTICK, LUB. OIL	1	1	1				N	
(A=E/# B2608) (B=E/# B2608)											
52	1	121450-34830	GUIDE, DIPSTICK	1	1						
52-1	1	121450-34831	GUIDE, DIPSTICK	1	1	1				N	
(A=*1981.12) (B=*1980.12)											
53	1	121450-34840	GASKET	1	1	1					
54	1	26106-080222	BOLT M 8X 22 PLATED	2	2	2					
55	1	121400-01860	COVER	1						W	
(A=E/#200317)											
55-1	1	121520-01860	COVER, BLIND	1	1	1				N	1
(A=E/#202091)											
56	1	121400-01850	GASKET	1						W	
(A=E/#200317)											
56-1	1	121520-01850	GASKET, F.FEED PUMP	1	1	1				N	
(A=E/#202091)											
56-2	1	121520-01851	GASKET, (NON ASB.)	1	1	1				R	1
(A=E/# D0404) (B=E/# D0404) (C=E/# D0404)											
57	1	26116-060162	BOLT M 6X 16 PLATED	2	2					W	
(A=E/#200317) (B=E/#200317)											
57-1	1	26106-060142	BOLT M 6X 14 PLATED	2	2	2				N	1

N:Old $\overset{\text{Yes}}{\underset{\text{No}}{\leftrightarrows}}$ New, Q:Old $\overset{\text{No}}{\underset{\text{Yes}}{\leftrightarrows}}$ New, R:Old $\overset{\text{Yes}}{\underset{\text{Yes}}{\leftrightarrows}}$ New, S:Old $\overset{\text{No}}{\underset{\text{No}}{\leftrightarrows}}$ New, W:Add, Z:Discontinued, F:Interchangeable by set, K:Q'ty Change

++ CONTINUE ++

(C)Copy Rights YANMAR CO.,LTD.

Fig.1. CYLINDER BLOCK

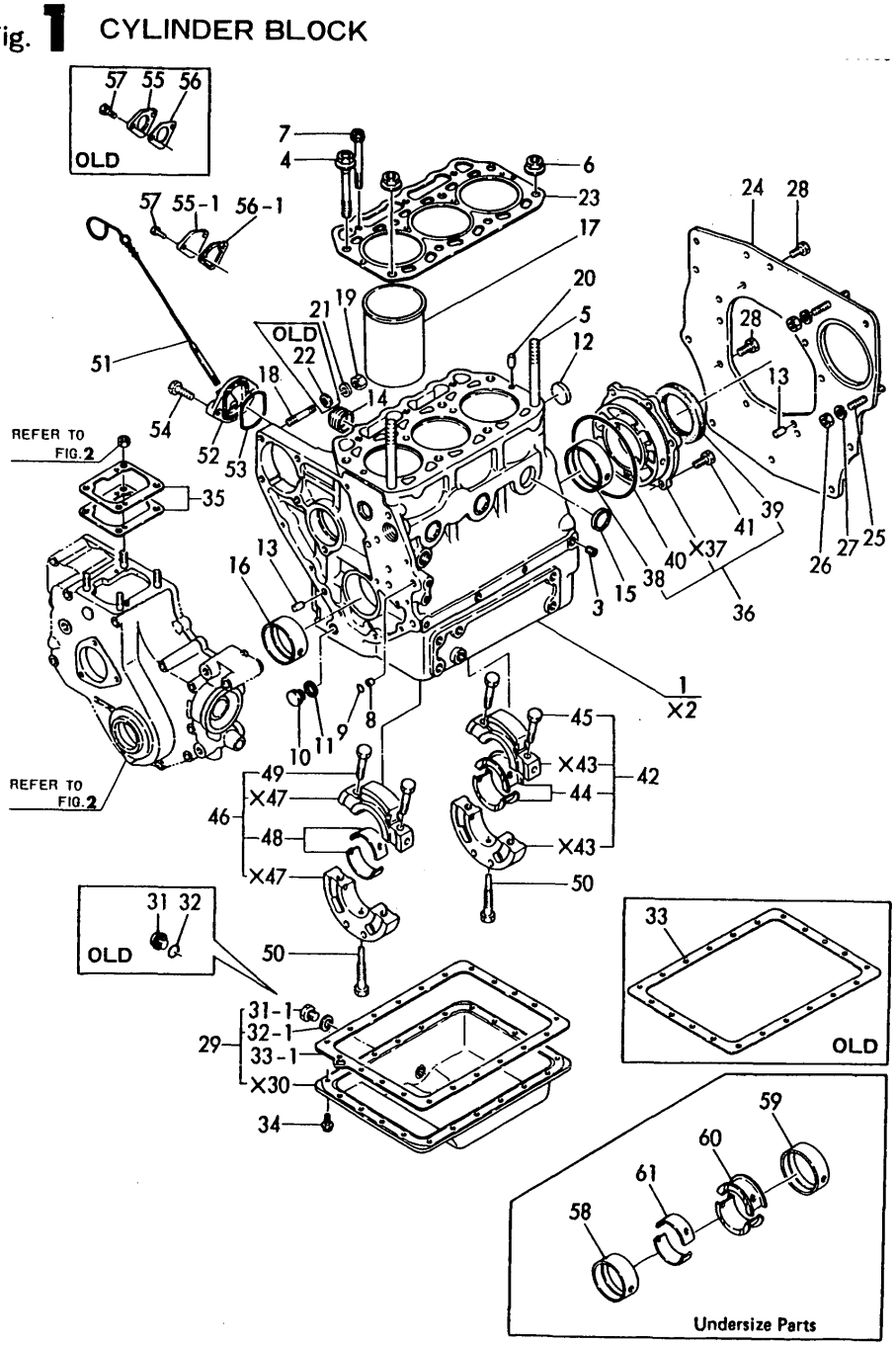

1. CYLINDER BLOCK

(A)=3T72HA (D)=
(B)=3T72HA-F (E)=
(C)=3T72HA-S (F)=

REF.	LEV.	PARTS NO.	DESCRIPTION	Q'TY (A)	(B)	(C)	(D)	(E)	(F)	I	R
	(A=*1982.10)	(B=*1982.10)									
57A	1	22117-060000	WASHER 6	2	2					W	
	(A=E/#200317)	(B=E/#200317)									
57A-1	1	22117-060000	WASHER 6	2	2					Z	
	(A=*1982.10)	(B=*1982.10)									
58	1	121450-02310	MAIN BEARING 0.25US	1	1	1					4
59	1	121450-02320	MAIN BEARING 0.25US	1	1	1					4
60	1	121450-02370	MAIN BEARING 0.25US	1	1	1					4
61	1	121450-02380	MAIN BEARING 0.25US	1	1	1					4

N:Old ◄Yes/No► New, Q:Old ◄No/Yes► New, R:Old ◄Yes/Yes► New, S:Old ◄No/No► New, W:Add, Z:Discontinued, F:Interchangeable by set, K:Q'ty Change

(C)Copy Rights YANMAR CO.,LTD.

Fig.2. GEARS HOUSING

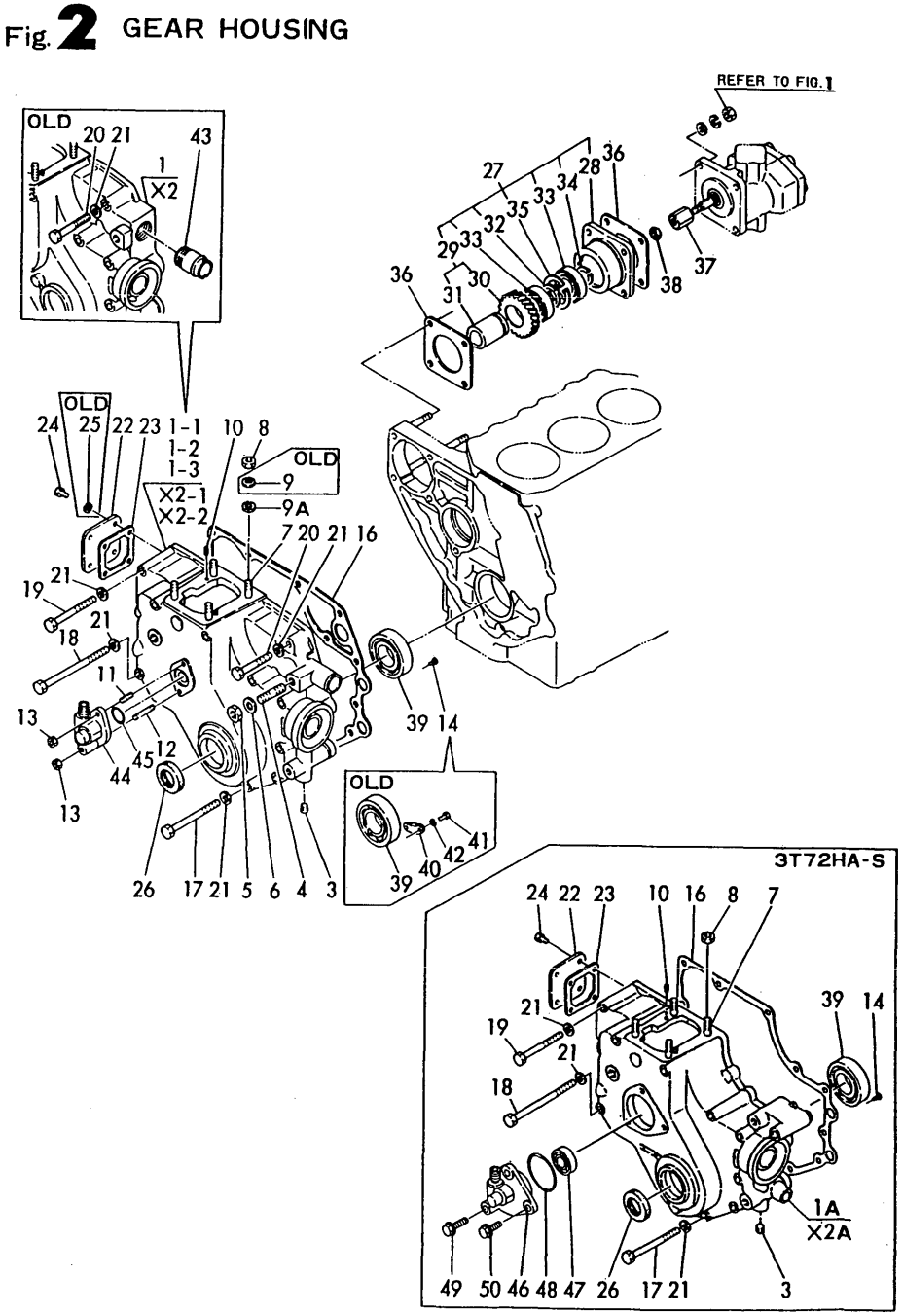

2. GEARS HOUSING

(A)=3T72HA (D)=
(B)=3T72HA-F (E)=
(C)=3T72HA-S (F)=

REF.	LEV.	PARTS NO.	DESCRIPTION	Q'TY (A)	(B)	(C)	(D)	(E)	(F)	I	R
1	1	721454-01610	HOUSING ASSY, GEARS	1							
1-1	1	721454-01611	HOUSING ASSY, GEARS	1	1					S	1
	(A=*1980.09)										
1-2	1	721454-01612	HOUSING ASSY, GEARS	1	1					S	2
	(A=E/#202606)	(B=E/#202606)									
1A	1	721454-01613	HOUSING ASSY, GEARS			1					
3	2	124060-01050	PLUG, PT1/8	1	1	1					
4	2	121450-01570	STUD	1	1						
5	2	26706-100002	NUT M10	1	1						
6	2	22117-100000	WASHER 10	1	1						
7	2	26216-080222	STUD M 8X 22 PLATED	4	4						
7-1	2	121450-01560	STUD M 8X 22	4	4	4				N	
	(A=*1981.)	(B=*1981.)									
8	2	26716-080002	NUT M 8	4	4						
8-1	2	194990-22050	NUT W/WASHER 8		4	4				N	
		(B=*)									
9	2	43400-500410	SEAL WASHER 8	4	4					Z	
	(A=*)	(B=*)									
9A	2	22217-080000	SPRING WASHER 8	4							
10	2	22351-040010	SPRING PIN 4X10	2	2	2					
11	2	26216-060142	STUD M 6X 14 PLATED	1	1	2					
12	2	26216-060352	STUD M 6X 35 PLATED	1	1						
13	2	26366-060002	NUT M 6	2	2	2					
14	2	26587-080102	SCREW M 8X 10	1	1	1				W	
	(A=E/#202606)	(B=E/#202606)									
15	1	24341-000260	O-RING 1A S-26.0			1					
16A	1	121450-01511	GASKET, GEAR HOUSING	1	1						
16B	1	121575-01510	GASKET, GEAR HOUSING			1					
17	1	26116-080852	BOLT M 8X 85 PLATED	7	7						
17-1	1	26106-080852	BOLT M 8X 85 PLATED	7	7	7				N	
	(A=*1982.10)	(B=*1982.10)									
18	1	22252-000150	CIRCLIP 15	1	1	1	1				
18-1	1	26106-081152	BOLT M 8X115 PLATED	3	3	3				N	
	(A=*1982.10)	(B=*1982.10)									
19	1	26116-080752	BOLT M 8X 75 PLATED	2	2						
19-1	1	26106-080752	BOLT M 8X 75 PLATED	2	2	2				N	
	(A=*1982.10)	(B=*1982.10)									
20	1	26116-080552	BOLT M 8X 55 PLATED	1							
20-1	1	26116-080452	BOLT M 8X 45 PLATED	1	1					S	
	(A=*1980.08)										
20-2	1	26106-080452	BOLT M 8X 45 PLATED	1	1	1				N	1
	(A=*1982.10)	(B=*1982.10)									
21	1	22117-080000	WASHER 8	13	13	13					
21-1	1	22117-080000	WASHER 8	13	13					Z	
	(A=*1982.10)	(B=*1982.10)									
22	1	121450-01550	COVER, CYL. BLOCK	1	1	1					
23	1	121450-01531	GASKET, COVER	1	1	1					
24A	1	26013-060122	BOLT M 6X 12			4					
24B	1	26106-060122	BOLT M 6X 12 PLATED	4	4						
25	1	22217-060000	SPRING WASHER 6	4	4					Z	
	(A=E/# A3157)	(B=E/# A3157)									

N:Old $\xleftarrow[\text{No}]{\text{Yes}}$ New, Q:Old $\xleftarrow[\text{Yes}]{\text{No}}$ New, R:Old $\xleftarrow[\text{Yes}]{\text{Yes}}$ New, S:Old $\xleftarrow[\text{No}]{\text{No}}$ New, W:Add, Z:Discontinued, F:Interchangeable by set, K:Q'ty Change

++ CONTINUE ++

(C)Copy Rights YANMAR CO.,LTD.

Fig.2. GEARS HOUSING

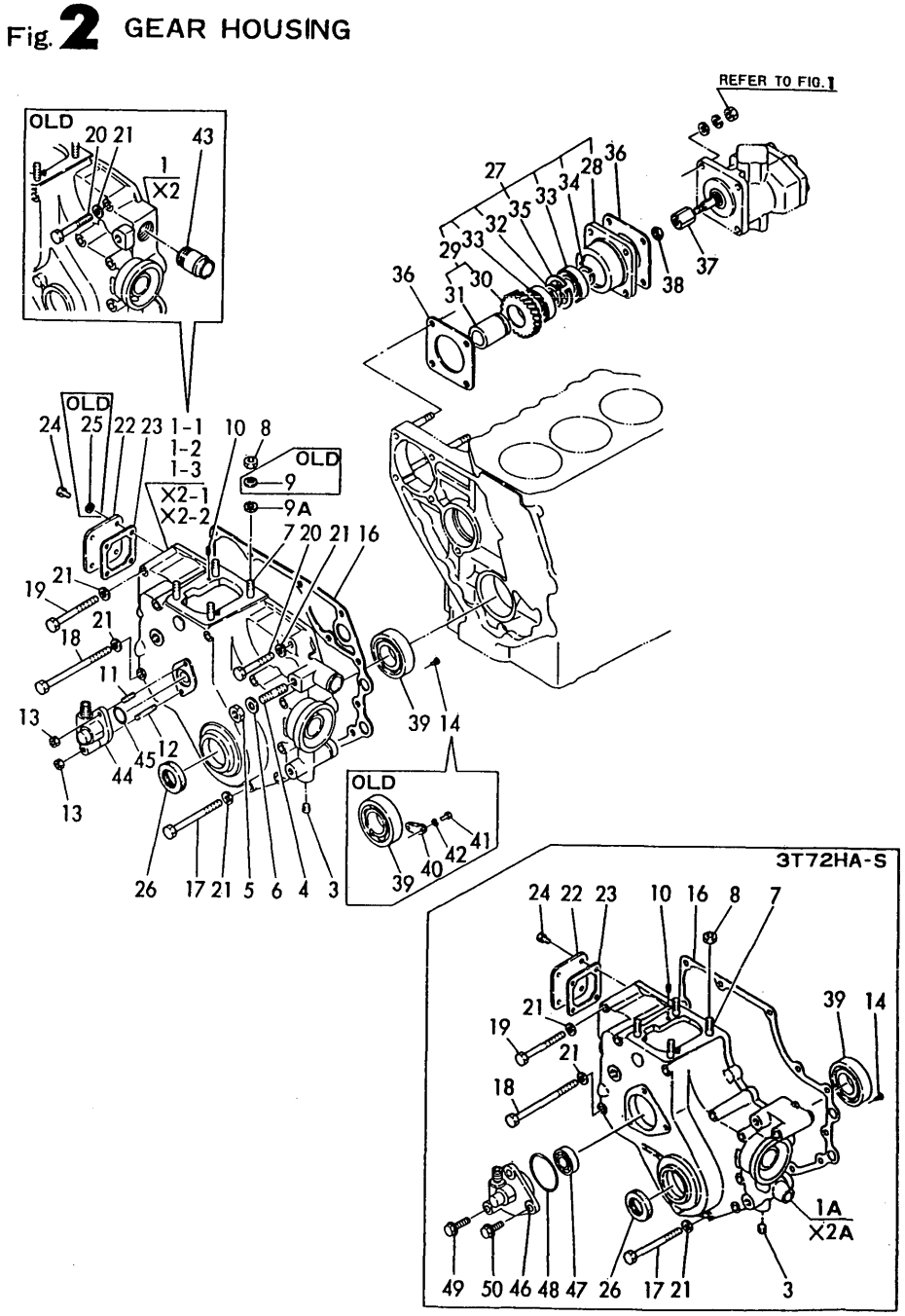

2. GEARS HOUSING

(A)=3T72HA (D)=
(B)=3T72HA-F (E)=
(C)=3T72HA-S (F)=

REF.	LEV.	PARTS NO.	DESCRIPTION	Q'TY (A)	(B)	(C)	(D)	(E)	(F)	I	R
26	1	121450-01800	SEAL, OIL	1							
26-1	1	121450-01801	SEAL TC25 40 8, OIL	1	1	1				N	
	(A=*1980.09)										
26A	1	121085-01890	PLUG		1					W	
			(B=FROM 1ST)								
27	1	129350-26000	GEAR UNIT	1	1	1					
28	2	129350-26050	BRACKET, HO-P	1	1	1					
29	2	129350-26100	SHAFT ASSY, DRIVING	1	1	1					
30	3	129350-26200	GEAR	1	1	1					
31	3	129350-26400	SHAFT, HO-P	1	1	1					
32	2	124950-26420	SPACER	1	1	1					
33	2	129350-26490	BALL BEARING	2	2	2					
34	2	22242-000250	CIRCLIP 25S	1	1	1					
35	2	22252-000470	CIRCLIP 47	1	1	1					
36	1	124240-01882	GASKET, HO-P	2	2	2					
36-1	1	124240-01883	GASKET, (NON ASB.)	2	2	2				R	
	(A=E/# D0404)	(B=E/# D0404)	(C=E/# D0404)								
37	1	129350-26160	CONNECTOR, HO-P	1	1	1					
38	1	194990-22050	NUT W/WASHER 8	1	1	1					
39	1	24101-063050	BALL BEARING	1	1	1				W	
	(A=E/#201371)	(B=E/#201371)	(C=FROM 1ST)								
40	1	124085-01820	RETAINER, BEARING	1	1					W	
	(A=E/#201371)	(B=E/#201371)									
40-1	1	124085-01820	RETAINER, BEARING	1	1					Z	
	(A=E/#202607)	(B=E/#202607)									
41	1	26116-040102	BOLT M 4X 10 PLATED	2	2					W	
	(A=E/#201371)	(B=E/#201371)									
41-1	1	26116-040102	BOLT M 4X 10 PLATED	2	2					Z	
	(A=E/#202607)	(B=E/#202607)									
42	1	22217-040000	SPRING WASHER 4	2	2					W	
	(A=E/#201371)	(B=E/#201371)									
42-1	1	22217-040000	SPRING WASHER 4	2	2					Z	
	(A=E/#202607)	(B=E/#202607)									
43	1	124160-49480	JOINT, PIPE	1						Z	
	(A=*1980.09)										
44	1	121450-91400	GEAR UNIT	1	1						
45	1	24341-000260	O-RING 1A S-26.0	1	1						
46	1	121456-91400	GEAR UNIT			1					
47	1	24101-062024	BALL BEARING			1					
48	1	24341-000460	O-RING 1A S-46.0			1					
49	1	121456-91991	BOLT M8X 35 PLATED			1					
50	1	121456-91981	BOLT M8X 16 PLATED			1					

N:Old $\overset{\text{Yes}}{\underset{\text{No}}{\leftrightarrow}}$ New, Q:Old $\overset{\text{No}}{\underset{\text{Yes}}{\leftrightarrow}}$ New, R:Old $\overset{\text{Yes}}{\underset{\text{Yes}}{\leftrightarrow}}$ New, S:Old $\overset{\text{No}}{\underset{\text{No}}{\leftrightarrow}}$ New, W:Add, Z:Discontinued, F:Interchangeable by set, K:Q'ty Change

(C)Copy Rights YANMAR CO.,LTD.

Fig.3. CYLINDER HEAD & BONNET

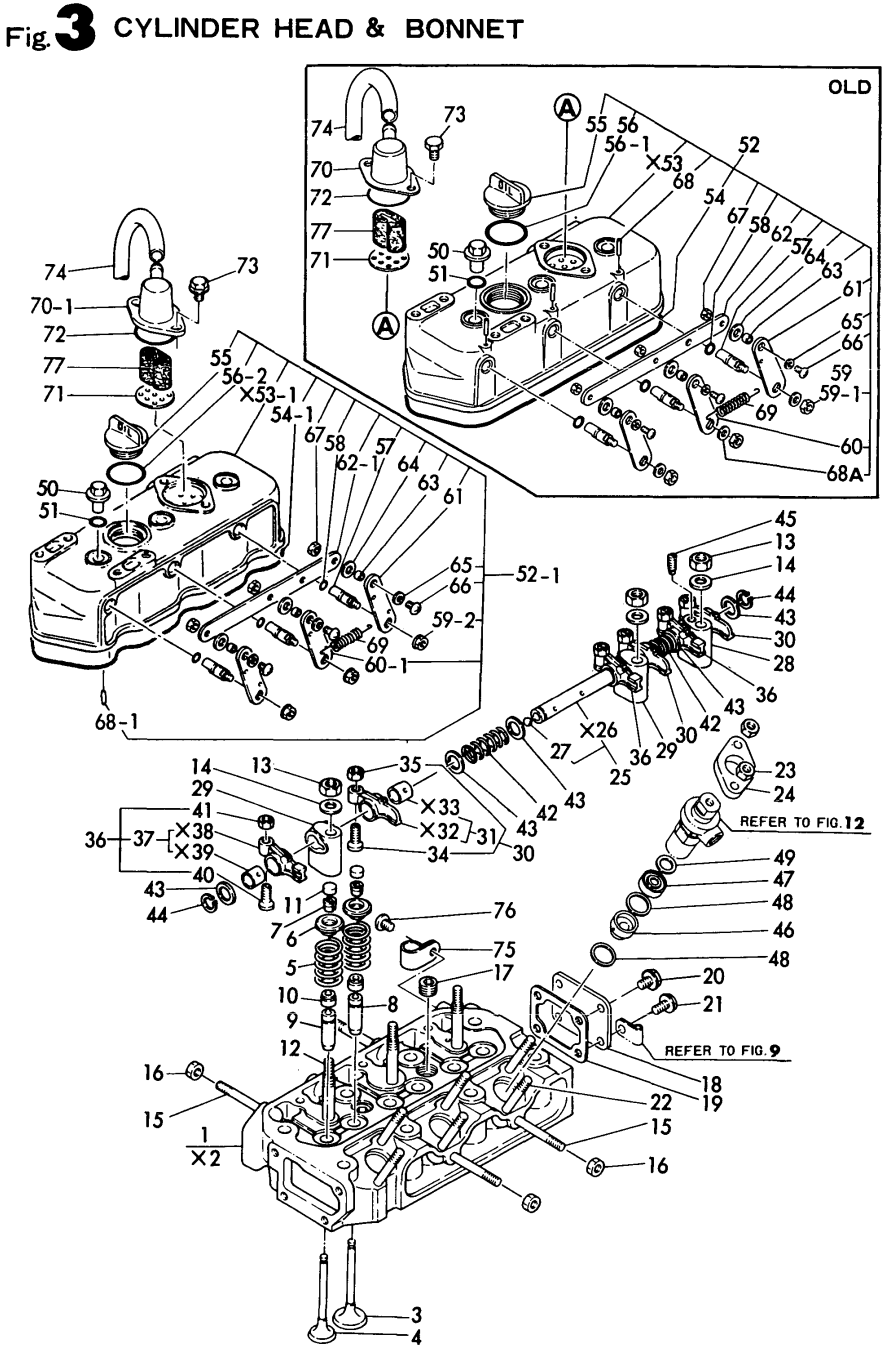

3. CYLINDER HEAD & BONNET

(A)=3T72HA (D)=
(B)=3T72HA-F (E)=
(C)=3T72HA-S (F)=

REF.	LEV.	PARTS NO.	DESCRIPTION	Q'TY (A)	(B)	(C)	(D)	(E)	(F)	I	R
1	1	721450-11700	HEAD ASSY, CYLINDER	1	1	1					
3	2	105225-11100	VALVE, SUCTION	3	3	3					
4	2	105225-11110	VALVE, EXHAUST	3	3	3					
5	2	124060-11120	SPRING, VALVE	6	6	6					
6	2	104200-11180	RETAINER, SPRING	6	6	6					
7	2	27310-070000	COTTER 7	6	6						
7-1	2	27310-070001	COTTER (2-PIECES)	3	3	3				N	
	(A=FROM 1ST)	(B=FROM 1ST)									
8A	2	124060-11800	GUIDE, VALVE	3	3	3					1
9A	2	124060-11810	GUIDE, VALVE	3	3	3					1
10	2	124950-11340	SEAL, VALVE STEM	6	6	6					
11	2	104211-11370	CAP, VALVE	6	6	6					
12	2	105225-11350	STUD, SUPPORT	3	3	3					
13	2	26696-100002	NUT M10	3	3	3					
14	2	22137-100000	WASHER 10,POLISHED	3	3	3					
15	2	121450-11550	STUD, MANIFOLD	4	4	4					
16	2	26366-080002	NUT M 8	4	4	4					
17	2	23871-030000	PLUG PT3/8,SCREW	2	2	2					
18	2	121450-11670	COVER	1	1	1					
19	2	121450-11680	GASKET, COVER	1	1	1					
20	2	26106-080122	BOLT M 8X 12 PLATED	3	3	3					
21	2	26106-080142	BOLT M 8X 14 PLATED	1	1	1					
22	2	26216-080652	STUD M 8X 65 PLATED	6	6	6					
23	2	121465-11950	NUT	6	6	6					
24	1	101147-11900	FLANGE	3	3	3					
25	1	121450-11240	SHAFT, ROCKER ARM	1	1	1					
27	2	24190-110001	BALL 11/32, STEEL	2	2	2					
28	1	121450-11260	SUPPORT, ROCKER ARM	1	1	1					
29	1	121450-11270	SUPPORT, ROCKER ARM	2	2	2					
30	1	721450-11650	ARM ASSY, ROCKER	3	3	3					
31	2	121450-11620	ARM ASSY, ROCKER	3	3	3					
34	2	101158-11230	SCREW, VALVE	3	3	3					
35	2	26756-080002	LOCK NUT M 8 PLATED	3	3	3					
36	1	721450-11660	ARM ASSY, ROCKER	3	3	3					
37	2	121450-11640	ARM ASSY, ROCKER	3	3	3					
40	2	101158-11230	SCREW, VALVE	3	3	3					
41	2	26756-080002	LOCK NUT M 8 PLATED	3	3	3					
42	1	121550-11280	SPRING	2	2	2					
43	1	121550-11290	WASHER	6	6	6					
44	1	22242-000140	CIRCLIP 14	2	2	2					
45	1	26921-080102	SETSCREW	1	1	1					
46	1	121450-11402	CHAMBER, FRONT	3	3	3					
47	1	124950-11410	CHAMBER, REAR	3	3	3					
48	1	124950-11450	GASKET, CHAMBER	6	6	6					
49	1	101147-11490	INSULATOR	3	3	3					
50	1	124160-11360	KNOB	3	3	3					
51	1	24311-000120	O-RING 1A P 12.0	3	3	3					
52	1	721454-11520	BONNET ASSY, HEAD	1	1						
52-1	1	721454-11521	BONNET ASSY	1	1	1				N	2
	(A=E/# B5567)	(B=E/# B5567)									
54	2	121450-11310	GASKET, BONNET	1	1						

N:Old $\overset{\text{Yes}}{\underset{\text{No}}{\leftrightarrow}}$ New, Q:Old $\overset{\text{No}}{\underset{\text{Yes}}{\leftrightarrow}}$ New, R:Old $\overset{\text{Yes}}{\underset{\text{Yes}}{\leftrightarrow}}$ New, S:Old $\overset{\text{No}}{\underset{\text{No}}{\leftrightarrow}}$ New, W:Add, Z:Discontinued, F:Interchangeable by set, K:Q'ty Change

++ CONTINUE ++

(C)Copy Rights YANMAR CO.,LTD.

Fig.3. CYLINDER HEAD & BONNET

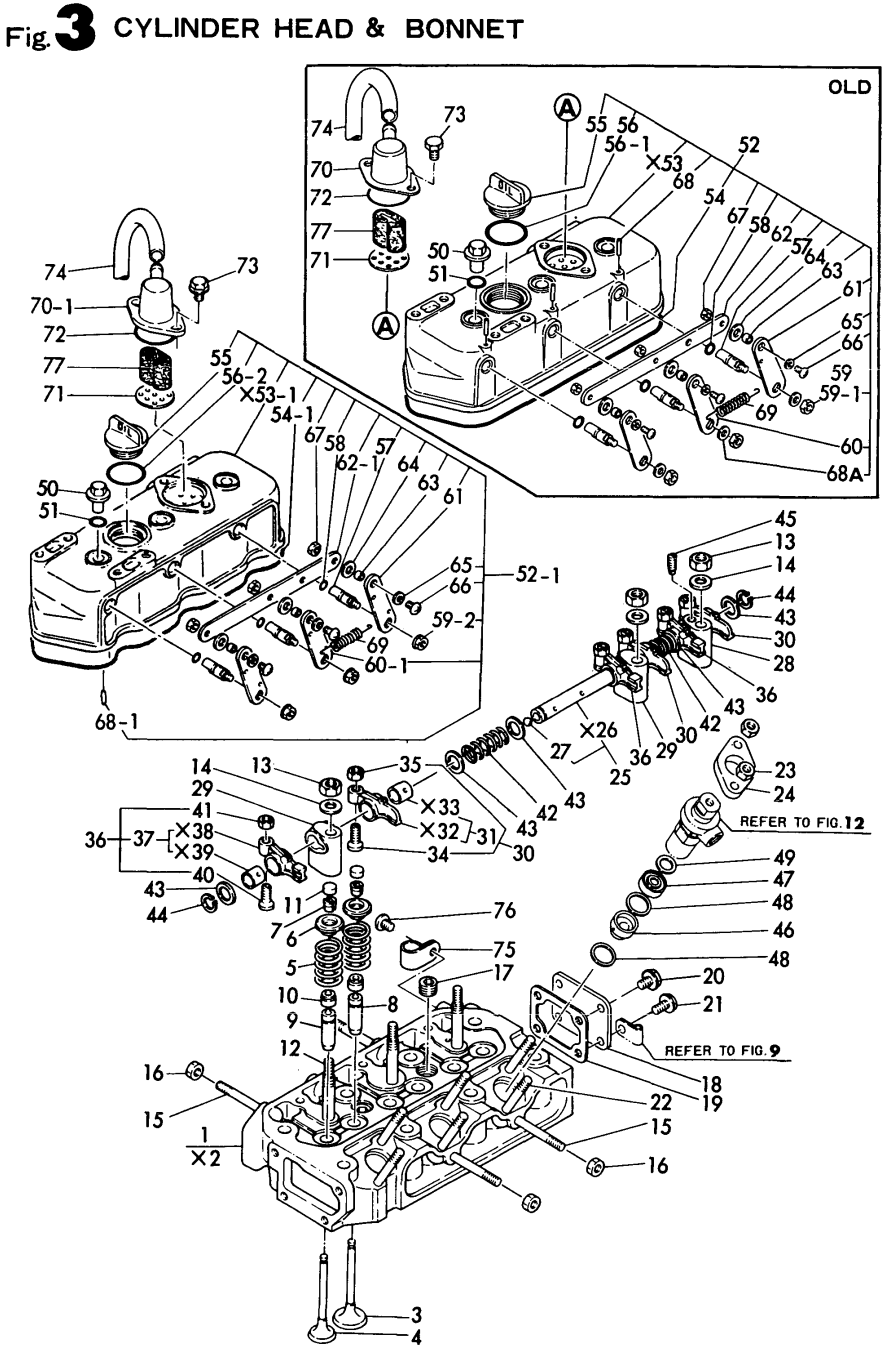

3. CYLINDER HEAD & BONNET

(A)=3T72HA (D)=
(B)=3T72HA-F (E)=
(C)=3T72HA-S (F)=

REF.	LEV.	PARTS NO.	DESCRIPTION	Q'TY (A)	(B)	(C)	(D)	(E)	(F)	I	R
54-1	2	121476-11310	GASKET, BONNET	1	1	1				S	2
(A=E/# B5567)		(B=E/# B5567)									
55	2	124160-01751	CAP, LUB.OIL SUPPLY	1	1	1					
56	2	24321-000350	O-RING 1A G-35.0	1							
56-1	2	121420-01760	O-RING	1	1					N	
(A=*1980.04)											
56-2	2	24311-000320	O-RING 1A P-32.0	1	1	1				R	
(A=E/# B2608)		(B=E/# B2608)									
57	2	121450-03610	SHAFT, DECOMPRESSION	3	3	3					
58	2	24311-000070	O-RING 1A P-7.0	3	3	3					
59	2	26716-060002	NUT M 6	3							
59-1	2	160260-01800	NUT	3	3					N	
(A=*1981.08)											
59-2	2	26366-060002	NUT M 6	3	3	3				N	
(A=E/# A3157)		(B=E/# A3157)									
60	2	121450-03750	LEVER, DECOMP	2							
60-1	2	121462-03740	LEVER, DECOMPRESSION	2	2	2				N	
(A=*)											
61	2	121462-03740	LEVER, DECOMPRESSION	1	1	1					
62	2	121450-03760	CONNECTOR	1	1						
62-1	2	121023-03760	CONNECTOR	1	1	1				R	
(A=E/# C1029)		(B=E/# C1029)									
63	2	121450-03770	COLLAR	3	3	3					
64	2	23418-080000	GASKET 8	3	3	3					
65	2	22117-050000	WASHER 5	3	3	3					
66	2	26557-050122	SCREW M 5X 12	3	3	3					
67	2	26756-050002	LOCK NUT M 5 PLATED	3	3	3					
68	2	22312-030220	PARALLEL PIN 3X22	3	3						
68-1	2	22312-030160	PARALLEL PIN 3X16	3	3	3				S	2
(A=E/# B5567)		(B=E/# B5567)									
68A	2	22117-060000	WASHER 6	3						Z	
(A=*1981.08)											
69	1	104104-67300	SPRING, RETURN	1	1	1					
70	1	121450-03011	BODY (A), BREATHER	1	1						
70-1	1	121450-03012	BODY (A), BREATHER	1	1	1				R	
(A=*1982.10)		(B=*1982.10)									
71	1	121450-03020	BODY (B), BREATHER	1	1	1					
72	1	24341-000400	O-RING 1A S-40.0	1	1	1					
73	1	26106-080162	BOLT M 8X 16 PLATED	2	2	2					
74	1	23065-120500	PIPE, VINYL 12X 500	1	1	1					
75	1	124160-01650	CLAMP	1	1	1					
76	1	26557-080102	SCREW M 8X 10	1	1						
76-1	1	26106-080102	BOLT M 8X 10 PLATED	1	1	1				N	
(A=E/# A3157)		(B=E/# A3157)									
77	1	121450-03030	STEEL WOOLPD24W28T18	1	1	1				W	
(A=*1982.10)		(B=*1982.10)									

N:Old $\frac{\text{Yes}}{\text{No}}$ New, Q:Old $\frac{\text{No}}{\text{Yes}}$ New, R:Old $\frac{\text{Yes}}{\text{Yes}}$ New, S:Old $\frac{\text{No}}{\text{No}}$ New, W:Add, Z:Discontinued, F:Interchangeable by set, K:Q'ty Change

(C)Copy Rights YANMAR CO.,LTD.

Fig.4. AIR CLEANER

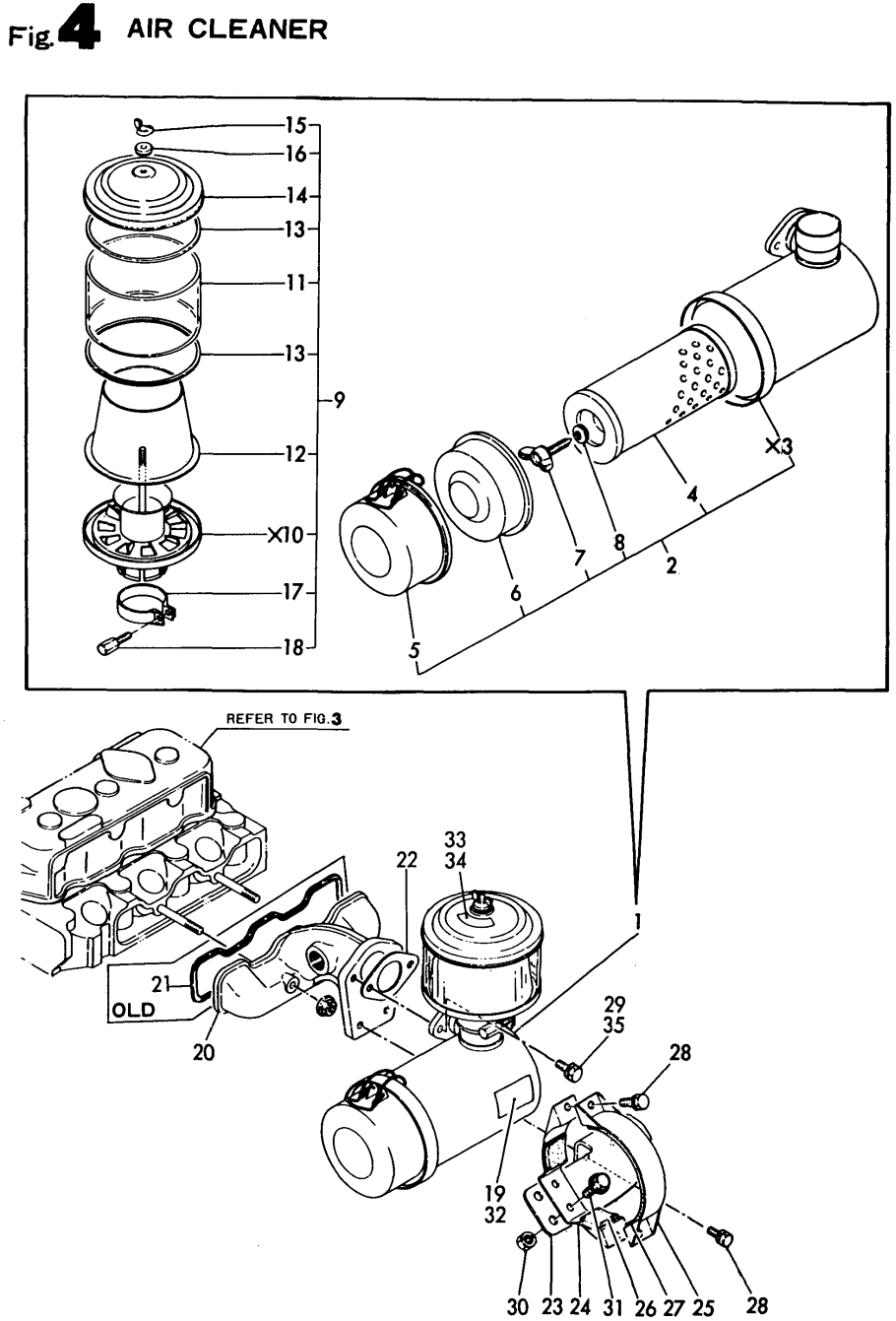

4. AIR CLEANER

(A)=3T72HA (D)=
(B)=3T72HA-F (E)=
(C)=3T72HA-S (F)=

REF.	LEV.	PARTS NO.	DESCRIPTION	Q'TY (A)	(B)	(C)	(D)	(E)	(F)	I	R
1	1	121454-12500	CLEANER, AIR	1	1	1					
2	2	121454-12300	CLEANER, AIR	1	1	1					
4	3	124064-12510	ELEMENT, AIR CLEANER	1	1	1					
5	3	121454-12660	PAN, DUST	1	1	1					
6	3	124064-12670	BAFFLE	1	1	1					
7	3	124064-12680	BOLT, WING	1	1	1					
8	3	124064-12690	WASHER	1	1	1					
9	2	124064-12400	PRE-CLEANER ASSY	1	1	1					
11	3	124064-12420	TUBE, CLEANER	1	1	1					
12	3	124064-12470	CASE W/GASKET	1	1	1					
13	3	124064-12430	GASKET, CLEANER	2	2	2					
14	3	124064-12440	COVER, PRE-CLEANER	1	1	1					
15	3	101147-12550	WING NUT	1	1						
15-1	3	124450-12560	WING NUT	1	1	1					R
	(A=*)	(B=*)									
16	2	124450-12571	WASHER	1	1	1					
17	2	124064-12450	CLAMP W/BOLT	1	1	1					
18	2	124064-12460	BOLT	1	1	1					
19	1	121454-12520	LABEL, AIR-CLEANER	1		1					W
	(A=*1980.)										
20	1	121454-12100	MANIFOLD, AIR INTAKE	1	1	1					
21	1	121450-12710	GASKET, SUC.MANIFOLD	1	1						Z
	(A=*)	(B=*)									
22	1	124067-12050	GASKET	1	1	1					
23	1	121454-12110	BRACKET, AIR CLEANER	1	1	1					
24	1	121454-12550	BRACE	1	1	1					
25	1	124064-12560	BRACE (B)	1	1	1					
26	1	124064-12570	SEAT (A)	2	2	2					
27	1	124064-12580	PAD (B)	1	1	1					
28	1	26116-080222	BOLT M 8X 22 PLATED	4							
28-1	1	26013-080252	BOLT M 8X 25	4	4	4					N
	(A=*)										
29	1	26116-080302	BOLT M 8X 30 PLATED	2							
29-1	1	26013-080252	BOLT M 8X 25	2		2					N
	(A=*)										
30	1	26716-080002	NUT M 8	2							
30-1	1	194990-22050	NUT W/WASHER 8	2	2	2					N
	(A=*)										
31	1	26116-080252	BOLT M 8X 25 PLATED	2							
31-1	1	26106-080162	BOLT M 8X 16 PLATED	2	2	2					N
	(A=*)										
32	1	121440-12480	LABEL, AIR CLEANER(F		1						
33	1	121454-12480	LABEL, PRE-CLEANER	1		1					W
	(A=*)										
34	1	121440-12520	LABEL, PRE-CLEANER(F		1						
35	1	26106-080222	BOLT M 8X 22 PLATED		2						

N:Old $\frac{\text{Yes}}{\text{No}}$ New, Q:Old $\frac{\text{No}}{\text{Yes}}$ New, R:Old $\frac{\text{Yes}}{\text{Yes}}$ New, S:Old $\frac{\text{No}}{\text{No}}$ New, W:Add, Z:Discontinued, F:Interchangeable by set, K:Q'ty Change

(C)Copy Rights YANMAR CO.,LTD.

Fig.5. SILENCER

Fig. 5 SILENCER

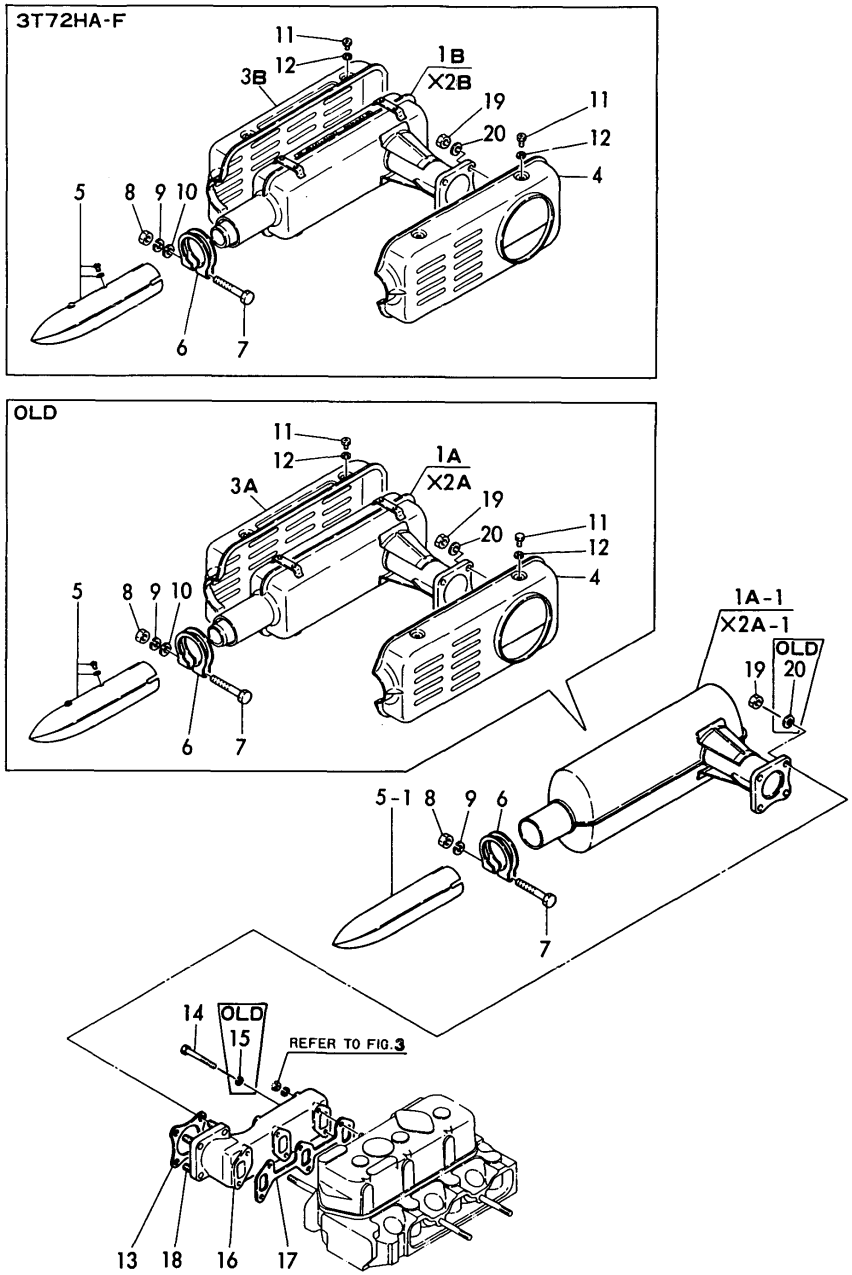

5. SILENCER

(A)=3T72HA (D)=
(B)=3T72HA-F (E)=
(C)=3T72HA-S (F)=

REF.	LEV.	PARTS NO.	DESCRIPTION	Q'TY (A)	(B)	(C)	(D)	(E)	(F)	I	R
1A	1	121454-13490	SILENCER	1							
1A-1	1	121454-13491	SILENCER	1		1				N	1
(A=E/#201612)											
1B	1	121440-13490	SILENCER		1						
3A	2	121470-13610	COVER, SILENCER	1						Z	
(A=E/#201612)											
3B	2	121440-13610	COVER, SILENCER		1						
4	2	121454-13620	COVER, SILENCER	1	1						
4-1	2	121454-13620	COVER, SILENCER	1						Z	
(A=E/#201612)											
5	2	121454-13650	EXTENSION	1	1						
5-1	2	121454-13651	PIPE, EXHAUST	1		1				N	
(A=E/#201612)											
6	2	121470-13580	CLAMP, SILENCER	1	1	1					
7	2	26106-100652	BOLT M10X 65 PLATED	1	1	1					
8	2	26706-100002	NUT M10	1	1	1					
9	2	22217-100000	SPRING WASHER 10	1	1	1					
10	2	22117-100000	WASHER 10	1	1					W	
(A=*1980.05)			(B=*1980.05)								
10-1	2	22117-100000	WASHER 10	1						Z	
(A=*)											
11	2	26013-060082	BOLT M 6X 8	8	8						
11-1	2	26013-060082	BOLT M 6X 8	8						Z	
(A=E/#201612)											
12	2	22217-060000	SPRING WASHER 6	8	8						
12-1	2	22217-060000	SPRING WASHER 6	8						Z	
(A=E/#201612)											
13	1	121450-13200	GASKET, SILENCER	1	1	1					
13-1	1	121450-13201	GASKET, SILENCER	1	1	1				N	
(A=E/# D0413)			(B=E/# D0413) (C=E/# D0413)								
14	1	26116-080602	BOLT M 8X 60 PLATED	4	4						
14-1	1	121465-13582	BOLT M 8X 58	4	4	4				N	
(A=E/# A4161)			(B=E/# A4161)								
15	1	22217-080000	SPRING WASHER 8	4	4					Z	
(A=E/# A4161)			(B=E/# A4161)								
16	1	121470-13510	MANIFOLD, EXHAUST	1	1	1					
17	1	121450-13250	GASKET, EXH.MANIFOLD	1	1	1					
18	1	26216-080222	STUD M 8X 22 PLATED	4	4	4					
19	1	26366-080002	NUT M 8	4	4	4					
20	1	22217-080000	SPRING WASHER 8	4	4					Z	
(A=*)			(B=*)								

N:Old $\frac{\text{Yes}}{\text{No}}$ New, Q:Old $\frac{\text{No}}{\text{Yes}}$ New, R:Old $\frac{\text{Yes}}{\text{Yes}}$ New, S:Old $\frac{\text{No}}{\text{No}}$ New, W:Add, Z:Discontinued, F:Interchangeable by set, K:Q'ty Change

(C)Copy Rights YANMAR CO.,LTD.

Fig.6. CAMSHAFT

Fig. 6 CAMSHAFT

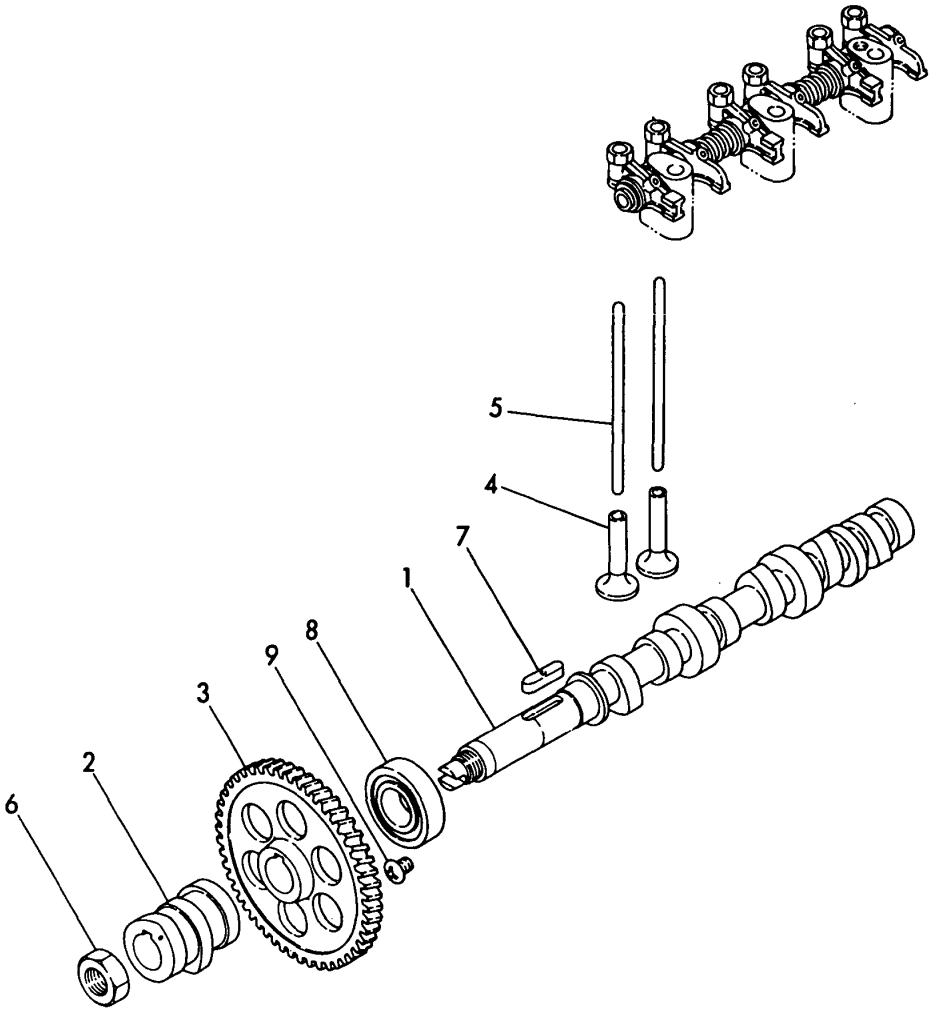

0CT10-G22801 6. CAMSHAFT

(A)=3T72HA (D)=
(B)=3T72HA-F (E)=
(C)=3T72HA-S (F)=

REF.	LEV.	PARTS NO.	DESCRIPTION	Q'TY (A)	(B)	(C)	(D)	(E)	(F)	I	R
1	1	121450-14010	CAMSHAFT	1	1	1					
2	1	121450-14090	CAM, FUEL	1	1	1					
3	1	129350-14100	GEAR, CAMSHAFT	1	1	1					
4	1	104200-14200	TAPPET	6	6	6					
5	1	121450-14400	ROD, PUSH	6	6	6					
6	1	104300-76460	NUT	1	1						
6-1	1	121450-14120	NUT, CAMSHAFT GEAR	1	1	1				N	
	(A=*1981.07)	(B=*1981.07)									
7	1	22512-070300	KEY 7X 30	1	1	1					
8	1	24101-062054	BEARING #6205	1	1	1					
9	1	26587-080102	SCREW M 8X 10	1	1						
9-1	1	26587-080122	SCREW M 8X 12	1	1	1				N	
	(A=E/# C7555)	(B=E/# C7555)									

N:Old $\overset{\text{Yes}}{\underset{\text{No}}{\leftrightarrow}}$ New, Q:Old $\overset{\text{No}}{\underset{\text{Yes}}{\leftrightarrow}}$ New, R:Old $\overset{\text{Yes}}{\underset{\text{Yes}}{\leftrightarrow}}$ New, S:Old $\overset{\text{No}}{\underset{\text{No}}{\leftrightarrow}}$ New, W:Add, Z:Discontinued, F:Interchangeable by set, K:Q'ty Change

(C)Copy Rights YANMAR CO.,LTD.

Fig.7. CRANKSHAFT & FLYWHEEL

Fig. 7 CRANKSHAFT & FLYWHEEL

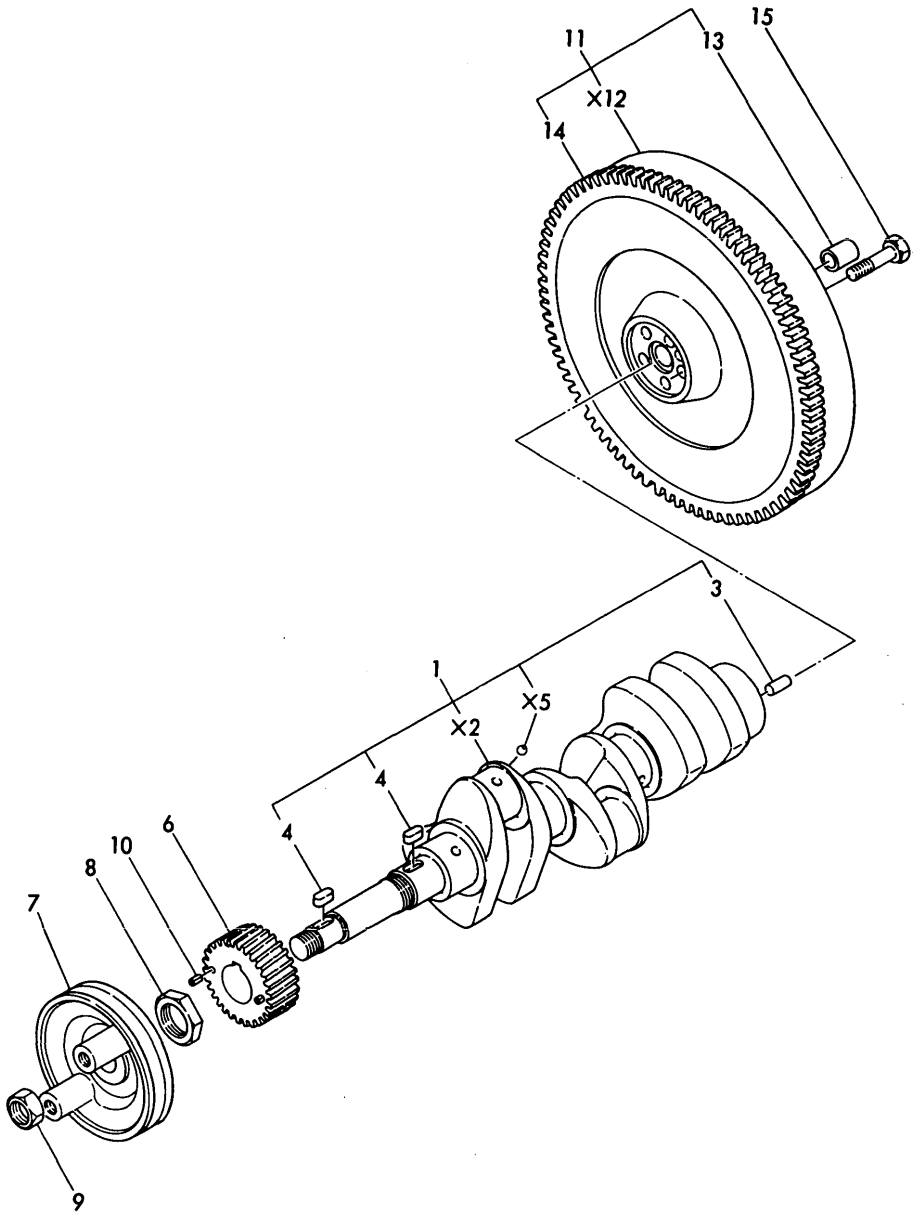

7. CRANKSHAFT & FLYWHEEL

(A)=3T72HA (D)=
(B)=3T72HA-F (E)=
(C)=3T72HA-S (F)=

REF.	LEV.	PARTS NO.	DESCRIPTION	Q'TY (A)	(B)	(C)	(D)	(E)	(F)	I	R
1	1	721450-21700	CRANKSHAFT ASSY	1							
1-1	1	721000-21700	CRANKSHAFT ASSY	1	1					S	1
	(A=E/#201212)										
1-2	1	721000-21701	CRANKSHAFT ASSY	1	1	1				S	2
	(A=E/#203016)	(B=E/#203016)									
3	2	22312-080160	PARALLEL PIN 8X 16	1	1	1					
4	2	22512-070180	KEY 7X 18	2	2	2					
6	1	129350-21200	GEAR, CRANKSHAFT	1	1	1					
7	1	121454-21650	V-PULLEY	1							
7-1	1	121454-21651	V-PULLEY	1	1					S	1
	(A=E/#201212)										
7-2	1	121454-21652	V-PULLEY	1	1	1				S	2
	(A=E/#203016)	(B=E/#203016)									
8	1	121450-21540	NUT,CRANK SHAFT GEAR	1	1						
8-2	1	121450-21541	NUT,CRANK SHAFT GEAR	1	1	1				R	
	(A=*1982.12)	(B=*1982.12)									
9	1	26776-180002	NUT M18,LOCK	1	1	1					
10	1	22351-040008	SPRING PIN 4X 8	2	2	2					
11	1	121454-21590	FLYWHEEL W/RING GEAR	1	1						
11-1	1	121454-21591	FLYWHEEL W/RING GEAR	1	1	1				S	2
	(A=E/#203016)	(B=E/#203016)									
13	2	124950-21230	BUSH	1	1	1					
14	2	124060-21600	GEAR, RING	1	1	1					
15	1	105225-21500	BOLT, FLYWHEEL	5	5						
15-1	1	105225-21501	BOLT, FLYWHEEL	5	5	5				R	
	(A=E/# A6798)	(B=E/# A6798)									

N:Old $\xleftarrow[\text{No}]{\text{Yes}}$ New, Q:Old $\xleftarrow[\text{Yes}]{\text{No}}$ New, R:Old $\xleftarrow[\text{Yes}]{\text{Yes}}$ New, S:Old $\xleftarrow[\text{No}]{\text{No}}$ New, W:Add, Z:Discontinued, F:Interchangeable by set, K:Q'ty Change

(C)Copy Rights YANMAR CO.,LTD.

Fig.8. PISTON & CONNECTING ROD

Fig. 8 PISTON & CONNECTING ROD

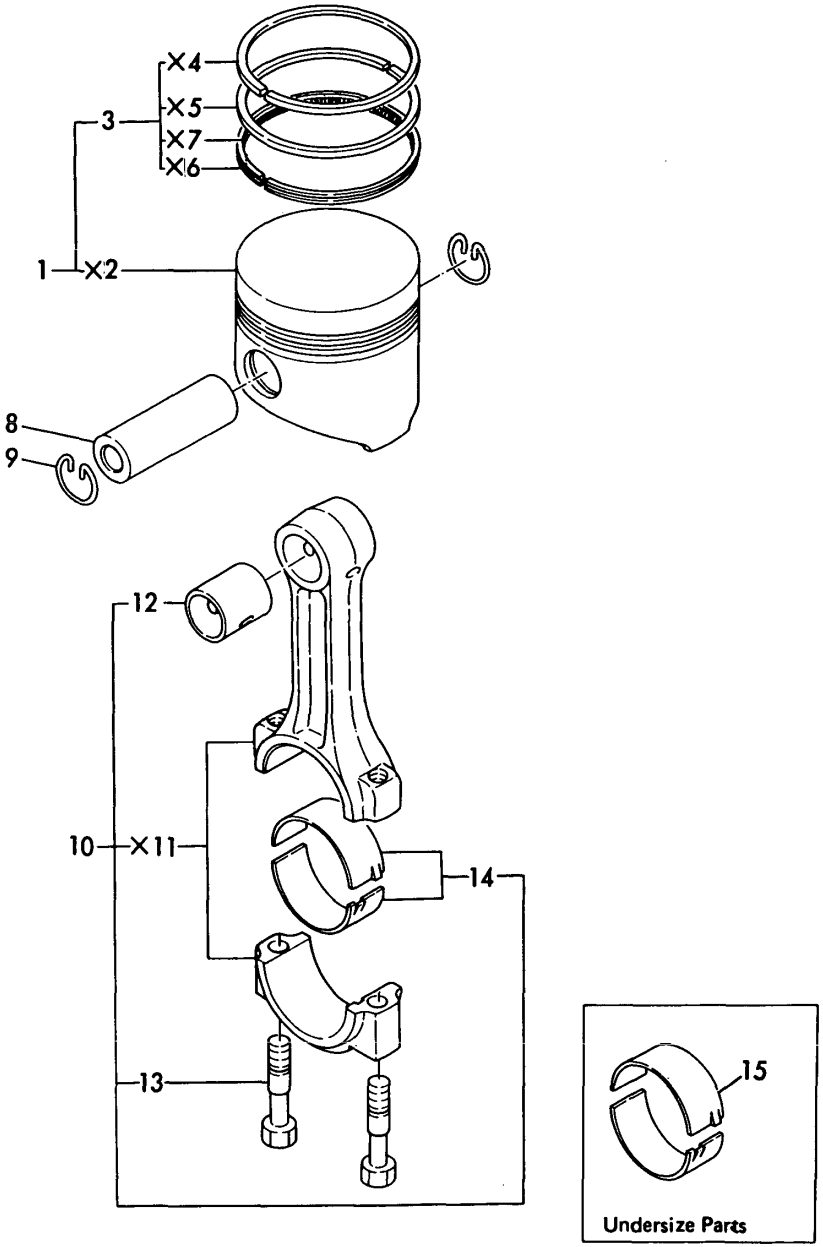

8. PISTON & CONNECTING ROD

(A)=3T72HA (D)=
(B)=3T72HA-F (E)=
(C)=3T72HA-S (F)=

REF.	LEV.	PARTS NO.	DESCRIPTION	Q'TY (A)	(B)	(C)	(D)	(E)	(F)	I	R
1	1	121450-22090	PISTON W/RINGS	3	3						
1-1	1	121450-22091	PISTON W/RINGS	3	3	3				N	
	(A=*1981.11)	(B=*1981.11)									
3	2	721450-22500	RING SET	3	3	3					
8	1	105225-22300	PIN, PISTON	3	3	3					
9	1	105225-22400	CIRCLIP	6	6	6					
10	1	705311-23100	ROD ASSY, CONNECTING	3	3	3					
10-1	1	728171-23100	ROD ASSY, CONNECTING	3	3	3				N	
	(A=*)	(B=*)	(C=*)								
12A	2	105225-23180	BUSH, PISTON PIN *	3	3	3					1
13	2	105225-23200	BOLT, ROD	6	6	6					
14	2	705311-23600	BEARING, CRANKPIN	3	3	3					
15	1	105311-23380	BEARING,PIN U.S=0.25	3	3	3					2

N:Old $\frac{\text{Yes}}{\text{No}}$ New, Q:Old $\frac{\text{No}}{\text{Yes}}$ New, R:Old $\frac{\text{Yes}}{\text{Yes}}$ New, S:Old $\frac{\text{No}}{\text{No}}$ New, W:Add, Z:Discontinued, F:Interchangeable by set, K:Q'ty Change

(C)Copy Rights YANMAR CO.,LTD.

Fig.9. LUB. OIL SYSTEM

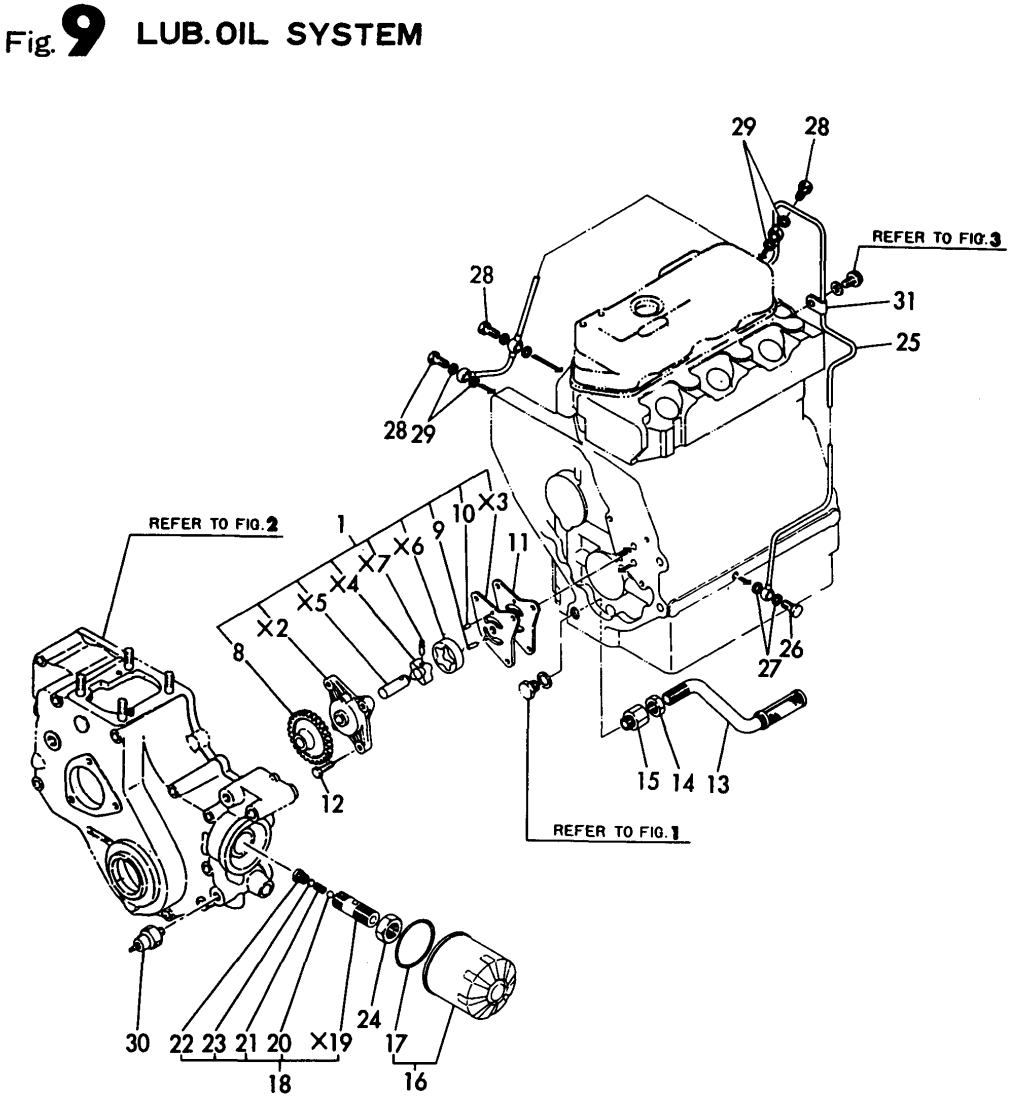

9. LUB. OIL SYSTEM

(A)=3T72HA (D)=
(B)=3T72HA-F (E)=
(C)=3T72HA-S (F)=

REF.	LEV.	PARTS NO.	DESCRIPTION	Q'TY (A)	(B)	(C)	(D)	(E)	(F)	I	R
1	1	121450-32091	PUMP ASSY, LUB OIL	1							
1-1	1	129350-32090	PUMP ASSY, LUB. OIL	1	1	1				R	1
	(A=E/#201047)										
11	1	121450-32021	GASKET, L.O.PUMP	1	1	1					
12	1	26013-060222	BOLT M 6X 22	3	3	3					
13	1	121450-35090	PIPE ASSY, OIL INLET	1	1	1					
14	1	124450-35070	NUT PF1/4	1	1	1					
15	1	121150-35100	FITTINGS	1	1	1					
16	1	124550-35110	ELEMENT, LUB. OIL	1	1	1					
17	2	124450-35110	O-RING, L.O.STRAINER	1	1	1					
18	1	121250-35300	VALVE ASSY, CONTROL	1	1						
18-1	1	124085-35300	VALVE ASSY, CONTROL	1	1	1				N	
	(A=*1981.06)	(B=*1981.06)									
20	2	24190-100001	BALL 5/16, STEEL	1	1	1					
21	2	121250-35320	SPRING	1	1	1					
22	2	121250-35330	RETAINER	1	1	1					
23	2	121250-35340	SHIM	1	1	1					
24	1	124450-35350	NUT	1	1						
24-1	1	124085-35350	LOCK NUT M20	1	1	1				R	
	(A=*1981.12)	(B=*1981.12)									
25	1	121450-39201	PIPE, LUB OIL	1	1	1					
26	1	124160-39140	JOINT BOLT 10	1	1	1					
27	1	23414-100000	GASKET 10, ROUND	2	2	2					
28	1	124550-59820	BOLT 8, PIPE JOINT	3	3	3					
29	1	23414-080000	GASKET 8, ROUND	6	6	6					
30	1	124160-39450	SWITCH, OIL PRESSURE	1	1	1					
31	1	124450-39240	RETAINER, PIPE	1	1	1					

N:Old $\overset{\text{Yes}}{\underset{\text{No}}{\leftrightarrows}}$ New, Q:Old $\overset{\text{No}}{\underset{\text{Yes}}{\leftrightarrows}}$ New, R:Old $\overset{\text{Yes}}{\underset{\text{Yes}}{\leftrightarrows}}$ New, S:Old $\overset{\text{No}}{\underset{\text{No}}{\leftrightarrows}}$ New, W:Add, Z:Discontinued, F:Interchangeable by set, K:Q'ty Change

(C)Copy Rights YANMAR CO.,LTD.

Fig.10. COOLING WATER SYSTEM

Fig. 10 COOLING WATER SYSTEM

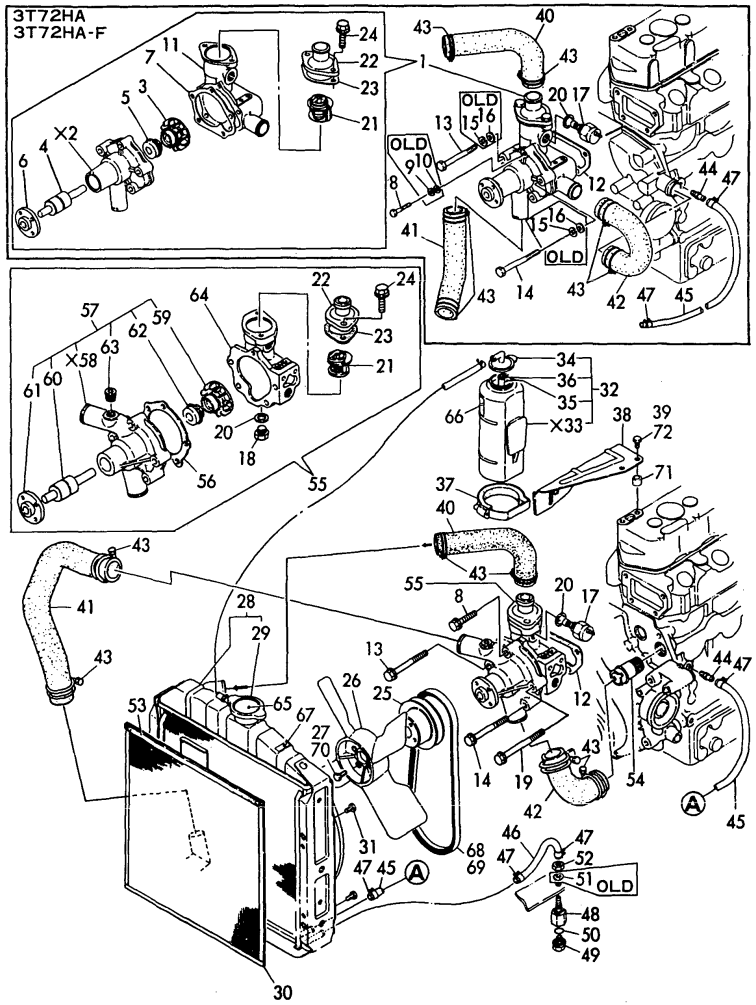

10. COOLING WATER SYSTEM

(A)=3T72HA (B)=3T72HA-F (C)=3T72HA-S (D)= (E)= (F)=

REF.	LEV.	PARTS NO.	DESCRIPTION	Q'TY (A)	(B)	(C)	(D)	(E)	(F)	I	R
1	1	121023-42100	PUMP ASSY, C. WATER	1	1						
3	2	129350-42200	IMPELLER	1	1						
4	2	121450-42240	SHAFT, IMPELLER	1	1						
5	2	121450-42310	SEAL, MECHANICAL	1	1						
6	2	121450-42260	FLANGE, V-PULLEY	1	1						
7	1	121023-42050	GASKET	1	1						
7-1	1	121450-42050	GASKET	1	1					N	
	(A=*1982.)	(B=*1982.)									
7-2	1	121023-42051	GASKET	1	1					N	
	(A=*)	(B=*)									
8	1	26106-060322	BOLT M 6X 32 PLATED	1	1	1					
9	1	22217-060000	SPRING WASHER 6	1	1					Z	
	(A=E/# A3157)	(B=E/# A3157)									
10	1	22117-060000	WASHER 6	1	1					Z	
	(A=E/# A3157)	(B=E/# A3157)									
11	1	121454-42120	BRACKET, C.W. PUMP	1	1						
12	1	121450-44410	GASKET, BRACKET	1	1	1					
13	1	26116-080852	BOLT M 8X 85 PLATED	3							
13-1	1	26106-080822	BOLT M 8X 82 PLATED	3	3	2				N	
	(A=E/# A3157)										
14	1	26116-080902	BOLT M 8X 90 PLATED	1							
14-1	1	26106-080872	BOLT M 8X 87 PLATED	1	1	1				N	
	(A=E/# A3157)										
15	1	22217-080000	SPRING WASHER 8	4	4					Z	
	(A=E/# A3157)	(B=E/# A3157)									
16	1	22117-080000	WASHER 8	4	4	3				Z	
	(A=E/# A3157)	(B=E/# A3157)									
17	1	121250-44900	SENDER, C.W. TEMP	1							
17-1	1	121250-44901	SWITCH, THERMO.	1	1	1				R	
	(A=E/#200105)										
18	1	121450-42450	PLUG M16			1					
19	1	26106-081052	BOLT M 8X105 PLATED			1					
20A	1	124465-44950	GASKET 16	1	1						
20B	1	124465-44950	GASKET 16			2					
21	1	129350-49800	THERMOSTAT	1	1	1					
22	1	129350-49530	COVER, THERMOSTAT	1	1	1					
23	1	124736-49540	GASKET	1							
23-1	1	129350-49540	GASKET, THERMO.COVER	1	1	1				S	
	(A=*1981.)										
23-2	1	129350-49541	GASKET, (NON ASB.)	1	1	1				R	
	(A=E/# D0404)	(B=E/# D0404)	(C=E/# D0404)								
24	1	26014-080162	BOLT M 8X 16	2	2	2					
25	1	121450-42350	V-PULLEY, C.W. PUMP	1	1	1					
26	1	121450-44740	FAN, COOLING	1	1	1					
27	1	26014-060202	BOLT M 6X 20			4					
28A	1	121454-44500	RADIATER	1	1						
28B	1	121453-44500	RADIATOR			1					
29	2	124450-44590	CAP	1	1	1					
30	1	121462-44580	SCREEN, RADIATOR	1	1	1					
31	1	26106-080122	BOLT M 8X 12 PLATED	4	4	4					
32	1	121450-44510	SUB RESERVOIR ASSY	1	1	1					

N:Old $\overset{\text{Yes}}{\underset{\text{No}}{\leftrightarrows}}$ New, Q:Old $\overset{\text{No}}{\underset{\text{Yes}}{\leftrightarrows}}$ New, R:Old $\overset{\text{Yes}}{\underset{\text{Yes}}{\leftrightarrows}}$ New, S:Old $\overset{\text{No}}{\underset{\text{No}}{\leftrightarrows}}$ New, W:Add, Z:Discontinued, F:Interchangeable by set, K:Q'ty Change

++ CONTINUE ++

(C)Copy Rights YANMAR CO.,LTD.

Fig.10. COOLING WATER SYSTEM

Fig. 10 COOLING WATER SYSTEM

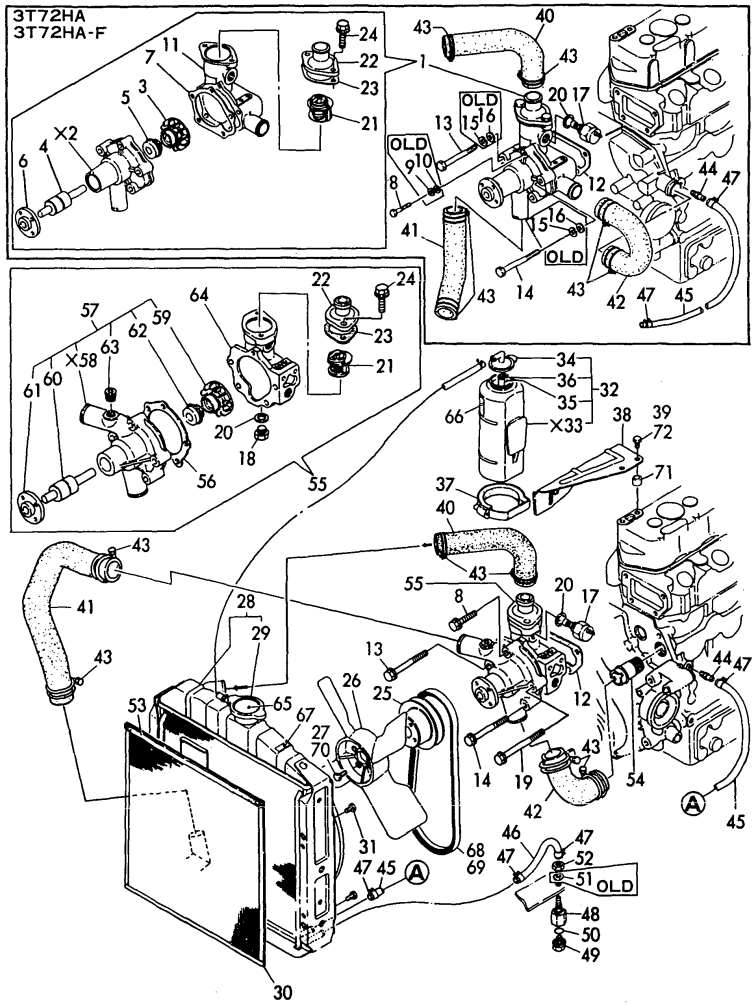

10. COOLING WATER SYSTEM

(A)=3T72HA (B)=3T72HA-F (C)=3T72HA-S (D)= (E)= (F)=

REF.	LEV.	PARTS NO.	DESCRIPTION	Q'TY (A)	(B)	(C)	(D)	(E)	(F)	I	R
34	2	121450-44530	CAP, RESERVOIR TANK	1	1	1					
35	2	23065-070180	PIPE 7X 180	1	1	1					
36	2	124450-44560	CLAMP	1	1	1					
37	1	124450-44550	CLAMP, SUB-TANK	1	1	1					
38	1	121450-44540	BRACKET, RESERVOIR	1	1	1					
39	1	26106-080122	BOLT M 8X 12 PLATED	2	2						
40	1	129350-49010	PIPE, COOLING WATER	1	1	1					
41A	1	121450-49020	PIPE, COOLING WATER	1	1						
41B	1	121554-49020	PIPE (B), C. WATER			1					
42A	1	121450-49030	PIPE, COOLING WATER	1	1						
42B	1	171003-49030	PIPE, COOLING WATER			1					
43	1	23010-038000	CLAMP 38	6	6	6					
44	1	121550-49110	JOINT PT1/8	1							
44-1	1	121550-49111	JOINT PT1/4	1	1	1				N	
	(A=E/#201078)										
45	1	124738-49150	PIPE, WATER DRAIN	1	1	1					
46	1	121454-49160	PIPE, WATER DRAIN	1	1	1					
47	1	124766-59050	CLAMP 12	4	4	4					
48	1	129350-49130	BODY, DRAIN COCK	1	1	1					
49	1	129350-49120	PLUG, WATER DRAIN	1	1	1					
50	1	24311-000120	O-RING 1A P 12.0	1	1	1					
51	1	22117-100000	WASHER 10	1	1					Z	
	(A=*)										
52	1	26777-100002	LOCK NUT M10	1							
52-1	1	26696-100002	NUT M10	1	1	1				N	
	(A=*)										
53	1	121454-44590	PAD	1	1	1				W	
	(A=E/#200004)										
54	1	124160-49480	JOINT, PIPE			1					
55	1	121000-42010	PUMP ASSY, C. WATER			1					
56	2	121000-42051	GASKET, C.W.PUMP			1					
57	2	121000-42100	PUMP ASSY, C. WATER			1					
59	3	129350-42200	IMPELLER			1					
60	3	121450-42240	SHAFT, IMPELLER			1					
61	3	121450-42260	FLANGE, V-PULLEY			1					
62	3	121450-42310	SEAL, MECHANICAL			1					
63	3	23871-030000	PLUG PT3/8,SCREW			1					
64	2	121000-42120	BRACKET, C.W. PUMP			1					
65A	1	124764-44800	LABEL, RADIATOR	1		1				W	
	(A=*)										
65B	1	124740-44800	LABEL, RADIATOR		1						
66A	1	124764-44810	LABEL, RESERVE TANK	1		1				W	
	(A=*)										
66B	1	124740-44810	LABEL, SUB-TANK		1						
67A	1	124764-44920	LABEL, ANTI-FREEZING	1		1				W	
	(A=*)										
67B	1	124740-44920	LABEL, ANTI-FREEZING		1						
68	1	121450-42290	V-BELT (A-33)	1							
68-1	1	121023-42290	V-BELT (A-33)	1	1					R	
	(A=*1980.)										
69	1	171022-44960	V-BELT (A-35)			1					

N:Old $\overset{\text{Yes}}{\underset{\text{No}}{\leftrightarrow}}$ New, Q:Old $\overset{\text{No}}{\underset{\text{Yes}}{\leftrightarrow}}$ New, R:Old $\overset{\text{Yes}}{\underset{\text{Yes}}{\leftrightarrow}}$ New, S:Old $\overset{\text{No}}{\underset{\text{No}}{\leftrightarrow}}$ New, W:Add, Z:Discontinued, F:Interchangeable by set, K:Q'ty Change

++ CONTINUE ++

(C)Copy Rights YANMAR CO.,LTD.

Fig.10. COOLING WATER SYSTEM

Fig. 10 COOLING WATER SYSTEM

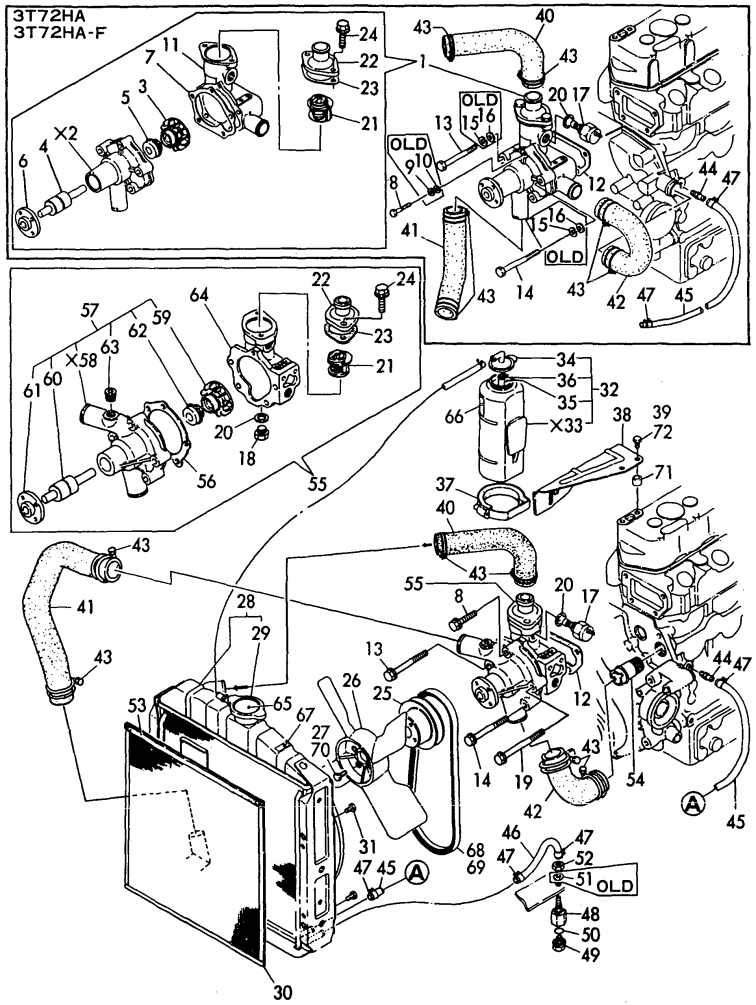

10. COOLING WATER SYSTEM

(A)=3T72HA (D)=
(B)=3T72HA-F (E)=
(C)=3T72HA-S (F)=

REF.	LEV.	PARTS NO.	DESCRIPTION	Q'TY (A)	(B)	(C)	(D)	(E)	(F)	I	R
70	1	26116-060162	BOLT M 6X 16 PLATED	4	4						
70-1	1	26014-060182	BOLT M 6X 18	4						N	
	(A=E/# B0710)										
70-2	1	26106-060162	BOLT M 6X 16 PLATED		4					N	
		(B=E/# B0710)									
71	1	124085-01900	GUIDE, O-RING			2					
72	1	26106-080202	BOLT M 8X 20 PLATED			2					

N:Old $\xleftarrow[\text{No}]{\text{Yes}}$ New, Q:Old $\xleftarrow[\text{Yes}]{\text{No}}$ New, R:Old $\xleftarrow[\text{Yes}]{\text{Yes}}$ New, S:Old $\xleftarrow[\text{No}]{\text{No}}$ New, W:Add, Z:Discontinued, F:Interchangeable by set, K:Q'ty Change

(C)Copy Rights YANMAR CO.,LTD.

Fig.11. FUEL INJECTION PUMP

Fig. 11 FUEL INJECTION PUMP

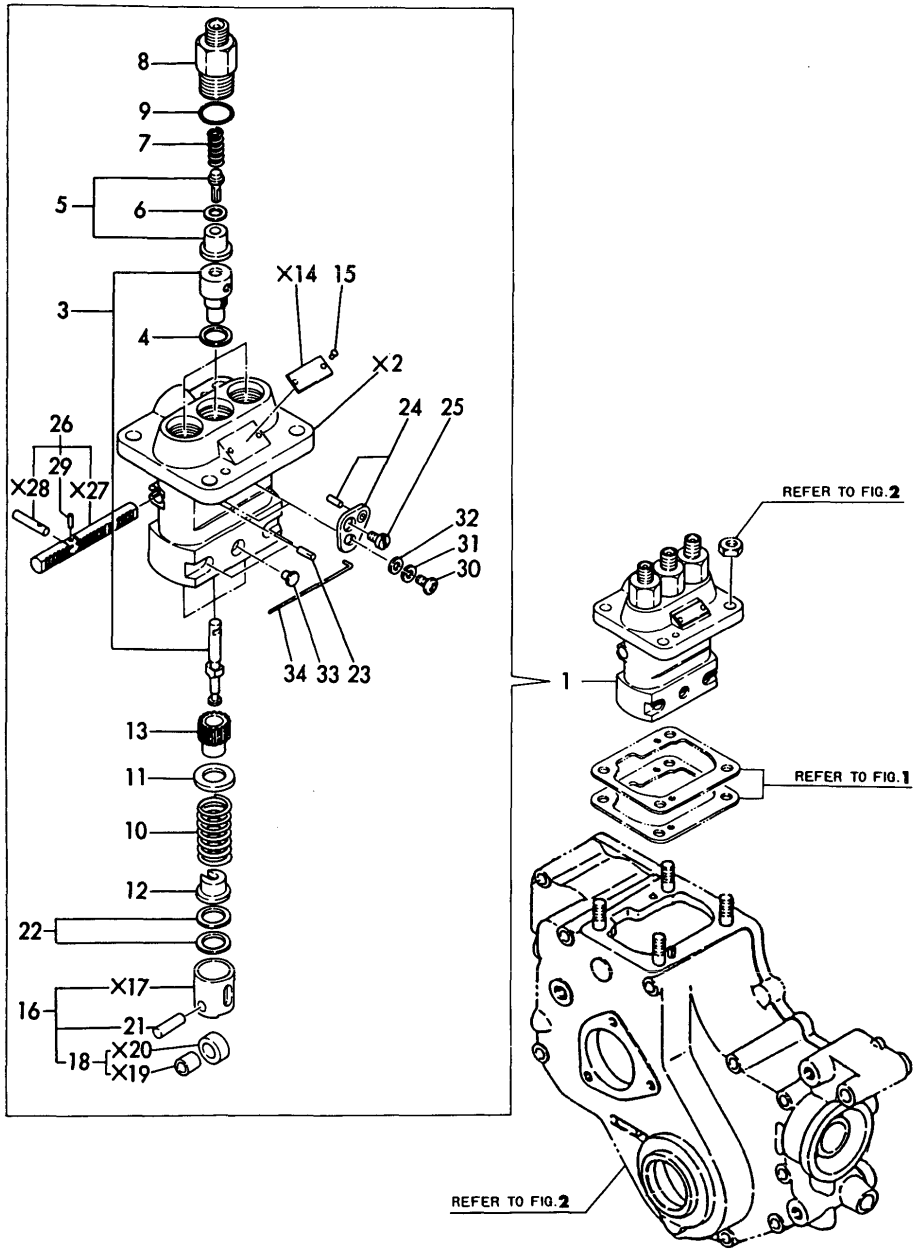

0CT10-G22801 11. FUEL INJECTION PUMP

(A)=3T72HA (D)=
(B)=3T72HA-F (E)=
(C)=3T72HA-S (F)=

REF.	LEV.	PARTS NO.	DESCRIPTION	Q'TY (A)	(B)	(C)	(D)	(E)	(F)	I	R
1	1	721454-51700	PUMP ASSY. F.INJECT.	1	1	1					
3	2	121454-51100	PLUNGER W/BARREL	3	3	3					
4	2	124950-51270	GASKET	3	3	3					
5	2	124060-51300	VALVE W/SEAT, DELIV.	3	3	3					
6	2	124550-51350	GASKET, DELIVERY	3	3	3					
7	2	124550-51320	SPRING, DELIV. VALVE	3	3	3					
8	2	124550-51341	RETAINER	3	3	3					
9	2	124550-51370	O-RING, DELIVERY	3	3	3					
10	2	124950-51190	SPRING, PLUNGER	3	3	3					
11	2	174307-51170	RETAINER A	3	3	3					
12	2	174307-51181	RETAINER B	3	3	3					
13	2	124950-51510	PINION	3	3	3					
15	2	124220-51890	RIVET, LABEL	2	2	2					
16	2	724550-51520	GUIDE ASSY, PLUNGER	3	3	3					
18	3	711100-51540	ROLLER ASSY	3	3	3					
21	3	174100-54120	PIN, ROLLER	3	3	3					
22	2	174307-51700	SHIM SET	3	3	3					
23	2	103854-51251	PIN, PLUNGER	1	1	1					
24	2	124950-51640	SHIM SET, CONTROL	2	2	2					
25	2	103854-51660	SCREW	2	2	2					
26	2	121450-51500	RACK, CONTROL	1	1	1					
29	3	124550-51590	LOCKER	1	1	1					
30	2	26587-050122	SCREW M 5X 12	2	2						
30-1	2	26587-050102	SCREW M 5X 10	2	2	2				N	
	(A=*)										
31	2	22217-050000	SPRING WASHER 5	2	2	2					
32	2	22117-050000	WASHER 5	2	2	2					
33	2	124950-51450	PIECE, GUIDE	3	3	3					
34	2	121150-51460	PIN	1	1	1					

N:Old $\overset{\text{Yes}}{\underset{\text{No}}{\leftrightarrow}}$ New, Q:Old $\overset{\text{No}}{\underset{\text{Yes}}{\leftrightarrow}}$ New, R:Old $\overset{\text{Yes}}{\underset{\text{Yes}}{\leftrightarrow}}$ New, S:Old $\overset{\text{No}}{\underset{\text{No}}{\leftrightarrow}}$ New, W:Add, Z:Discontinued, F:Interchangeable by set, K:Q'ty Change

(C)Copy Rights YANMAR CO.,LTD.

Fig.12. FUEL INJECTION VALVE

Fig. 12 FUEL INJECTION VALVE

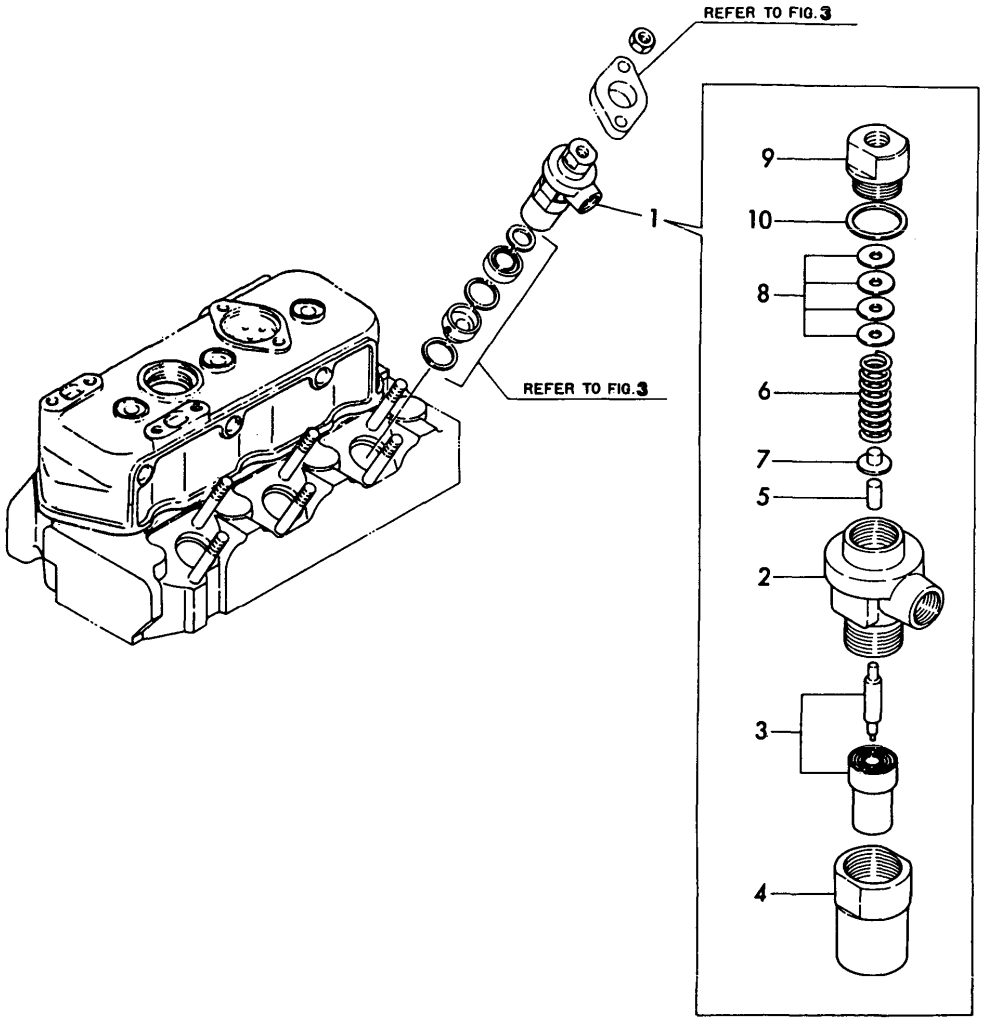

12. FUEL INJECTION VALVE

(A)=3T72HA (D)=
(B)=3T72HA-F (E)=
(C)=3T72HA-S (F)=

REF.	LEV.	PARTS NO.	DESCRIPTION	Q'TY (A)	(B)	(C)	(D)	(E)	(F)	I	R
1	1	724950-53100	VALVE ASSY, F.INJECT	3	3	3					
2	2	103854-53100	BODY, F.I. VALVE	3	3	3					
3	2	124770-53000	NOZZLE ASSY,F.INJECT	3	3	3					
4	2	101147-53080	HOLDER, VALVE W/CASE	3	3	3					
5	2	113200-53110	SPINDLE, INTER	3	3	3					
6	2	103854-53120	SPRING, NOZZLE	3	3	3					
7	2	113200-53120	SHOE, SPRING	3	3	3					
8	2	110250-53150	SHIM SET	3	3	3					
9	2	103854-53180	RETAINER, NOZ.SPRING	3	3	3					
10	2	172100-53200	GASKET	3	3	3					

N:Old $\xleftarrow[\text{No}]{\text{Yes}}$ New, Q:Old $\xleftarrow[\text{Yes}]{\text{No}}$ New, R:Old $\xleftarrow[\text{Yes}]{\text{Yes}}$ New, S:Old $\xleftarrow[\text{No}]{\text{No}}$ New, W:Add, Z:Discontinued, F:Interchangeable by set, K:Q'ty Change

(C)Copy Rights YANMAR CO.,LTD.

Fig.13. FUEL OIL SYSTEM

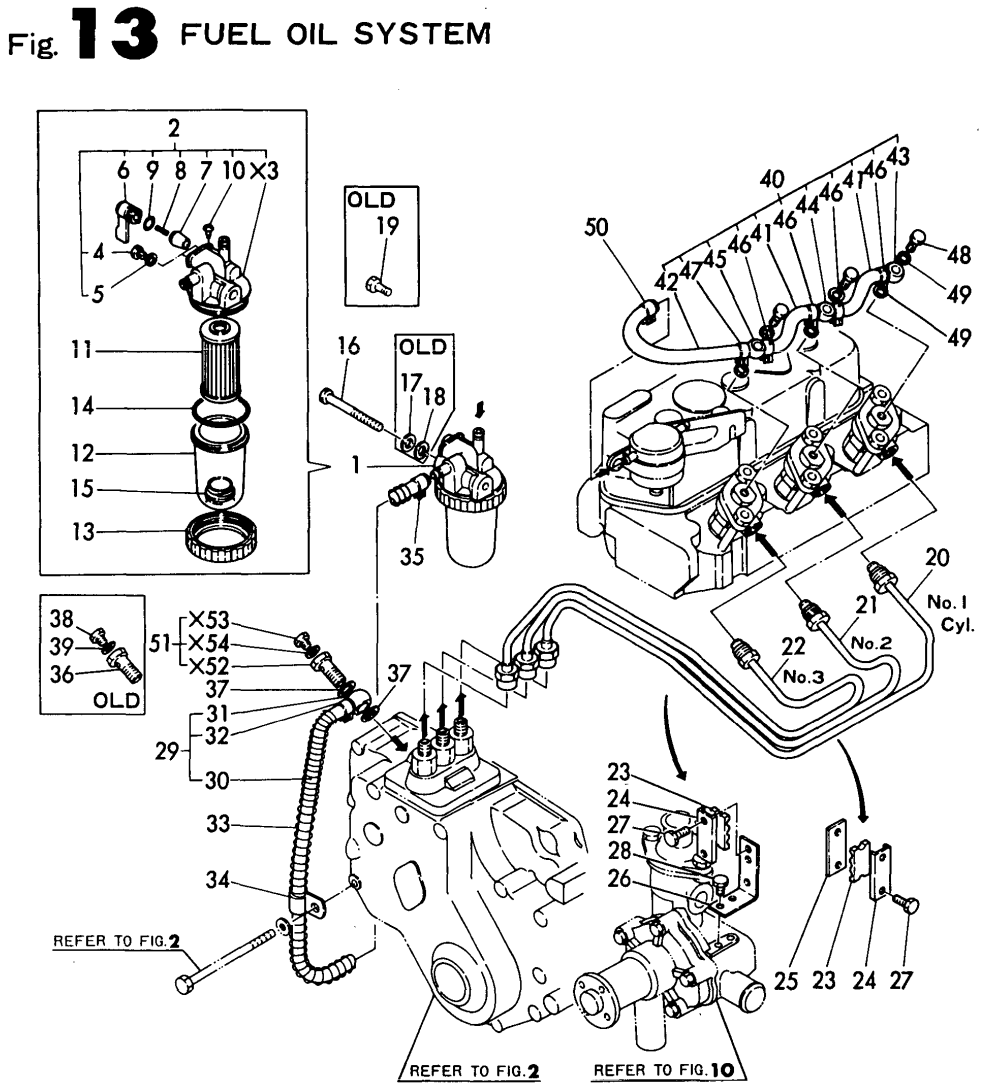

13. FUEL OIL SYSTEM

(A)=3T72HA (D)=
(B)=3T72HA-F (E)=
(C)=3T72HA-S (F)=

REF.	LEV.	PARTS NO.	DESCRIPTION	Q'TY (A)	(B)	(C)	(D)	(E)	(F)	I	R
1	1	121454-55600	STRAINER ASSY, FUEL	1	1	1					
2	2	721257-55540	COCK ASSY, FUEL	1	1	1					
4	3	101720-55750	PLUG 6	2	2						
4-1	3	124060-59380	PLUG	2	2					N	
	(A=*)	(B=*)									
4-2	3	101720-55750	PLUG 6	2	2	2				N	
	(A=*)	(B=*)									
5	3	23418-060000	GASKET 6, NYLON	2	2	2					
6	3	104200-55341	HANDLE, COCK	1	1	1					
7	3	104200-55321	VALVE, TAPER	1	1	1					
8	3	104200-55330	SPRING, TAPER VALVE	1	1	1					
9	3	24311-240100	O-RING 1A P-10A	1	1	1					
10	3	104200-55750	SCREW M 4	1	1	1					
11	2	124550-55700	ELEMENT, FUEL	1	1	1					
12	2	121254-55510	CUP, STRAINER	1	1	1					
13	2	110250-55610	RING, RETAINING	1	1	1					
14	2	102103-55520	O-RING	1	1	1					
15	1	121250-55620	SPRING	1	1	1					
16	1	26116-080652	BOLT M 8X 65 PLATED	1	1						
16-1	1	26116-080702	BOLT M 8X 70 PLATED	1	1					N	
	(A=*)	(B=*)									
16-2	1	26106-080652	BOLT M 8X 65 PLATED	1	1	1				N	
	(A=E/# A3157)	(B=E/# A3157)									
17	1	22217-080000	SPRING WASHER 8	1	1					Z	
	(A=*)	(B=*)									
18	1	22117-080000	WASHER 8	1	1					Z	
	(A=*)	(B=*)									
19	1	26116-060122	BOLT M 6X 12	2						Z	
	(A=*)										
20	1	121450-59810	PIPE (1), F. INJECT.	1	1	1					
21	1	121450-59820	PIPE (2), F. INJECT.	1	1	1					
22	1	121450-59830	PIPE (3), F. INJECT.	1	1	1					
23	1	123325-59100	RETAINER	2	2	2					
24	1	123325-59110	COVER	2	2	2					
25	1	121250-59860	RETAINER (B)	1	1	1					
26	1	121450-59850	BRACKET (A)	1	1	1					
27	1	26116-060162	BOLT M 6X 16 PLATED	4	4						
27-1	1	121465-59950	BOLT M 6X 16, PLATED	4	4	4				N	
	(A=E/# A3157)	(B=E/# A3157)									
28	1	26116-060102	BOLT M 6X 10 PLATED	2	2	2					
29	1	121454-59010	PIPE ASSY, FUEL OIL	1	1						
29-1	1	121454-59011	PIPE ASSY, FUEL OIL	1	1	1				S	1
	(A=E/#202243)	(B=E/#202243)									
30	2	121454-59090	PIPE	1	1	1					
31	2	124250-59260	JOINT, PIPE	1	1						
31-1	2	101304-59020	JOINT 12, PIPE	1	1	1				N	
	(A=E/#202243)	(B=E/#202243)									
31-2	2	129150-59020	JOINT, PIPE	1	1	1				N	
	(A=E/# C5857)	(B=E/# C5857)									
32	2	124766-59050	CLAMP 12	1	1	1					
33	1	106100-59060	SPRING, PIPE PROTECT	1							

N:Old $\overset{\text{Yes}}{\underset{\text{No}}{\leftrightarrow}}$ New, Q:Old $\overset{\text{No}}{\underset{\text{Yes}}{\leftrightarrow}}$ New, R:Old $\overset{\text{Yes}}{\underset{\text{Yes}}{\leftrightarrow}}$ New, S:Old $\overset{\text{No}}{\underset{\text{No}}{\leftrightarrow}}$ New, W:Add, Z:Discontinued, F:Interchangeable by set, K:Q'ty Change

++ CONTINUE ++

(C)Copy Rights YANMAR CO.,LTD.

Fig.13. FUEL OIL SYSTEM

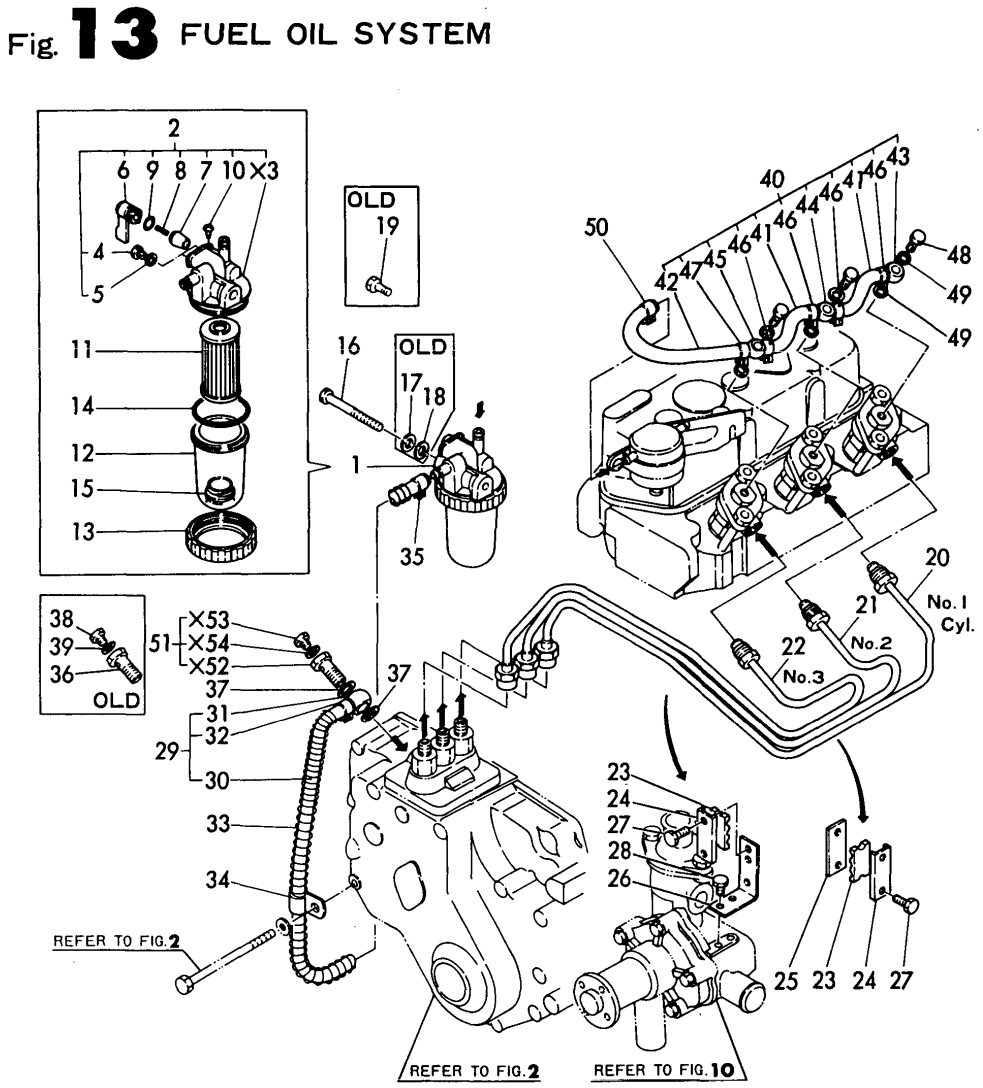

13. FUEL OIL SYSTEM

(A)=3T72HA (D)=
(B)=3T72HA-F (E)=
(C)=3T72HA-S (F)=

REF.	LEV.	PARTS NO.	DESCRIPTION	Q'TY (A)	(B)	(C)	(D)	(E)	(F)	I	R
33-1	1	121454-59060	SPRING, PIPE PROTECT	1	1	1				N	
	(A=*1980.)										
34	1	124160-01650	CLAMP	1	1	1					
35	1	124766-59050	CLAMP 12	1	1	1					
36	1	124060-59391	BOLT, JOINT	1	1						
36-1	1	103854-59201	BOLT, JOINT	1	1					S	1
	(A=E/#202243)	(B=E/#202243)									
36-2	1	103854-59201	BOLT, JOINT	1	1					Z	
	(A=E/#202243)	(B=E/#202243)									
37	1	104200-59170	GASKET 12	2	2	2					
38	1	124060-59380	PLUG	1	1					Z	
	(A=E/#202243)	(B=E/#202243)									
39	1	43400-500390	SEAL WASHER 6	1	1					Z	
	(A=E/#202243)	(B=E/#202243)									
40	1	121450-59500	PIPE, FUEL RETURN	1	1	1					
41	2	121450-59550	PIPE, FUEL RETURN	2	2	2					
42	2	121450-59560	PIPE, FUEL RETURN	1	1	1					
43	2	124550-59030	JOINT 8, PIPE	1	1	1					
44	2	124550-59090	JOINT, PIPE	1	1	1					
45	2	121750-59090	JOINT 8, PIPE	1	1	1					
46	2	124066-59100	CLAMP 8	4	4	4					
47	2	124060-77680	CLAMP 10	1	1	1					
48	1	101147-59810	BOLT, PIPE JOINT	3	3	3					
49	1	23414-080012	GASKET 8	6	6	6					
50	1	124060-77680	CLAMP 10	1	1	1					
51	1	103854-59191	BOLT W/PLUG & SEAL	1	1	1				W	1
	(A=E/#202243)	(B=E/#202243)	(C=FROM 1ST)								
52	2	103854-59201	BOLT, JOINT	1	1	1				W	1
	(A=E/#202243)	(B=E/#202243)	(C=FROM 1ST)								
53	2	124060-59380	PLUG	1	1	1				W	
	(A=E/#202243)	(B=E/#202243)	(C=FROM 1ST)								
54	2	43400-500390	SEAL WASHER 6	1	1	1				W	
	(A=E/#202243)	(B=E/#202243)	(C=FROM 1ST)								

N:Old $\frac{\text{Yes}}{\text{No}}$ New, Q:Old $\frac{\text{No}}{\text{Yes}}$ New, R:Old $\frac{\text{Yes}}{\text{Yes}}$ New, S:Old $\frac{\text{No}}{\text{No}}$ New, W:Add, Z:Discontinued, F:Interchangeable by set, K:Q'ty Change

(C)Copy Rights YANMAR CO.,LTD.

Fig.14. GOVERNOR

Fig. 14 GOVERNOR

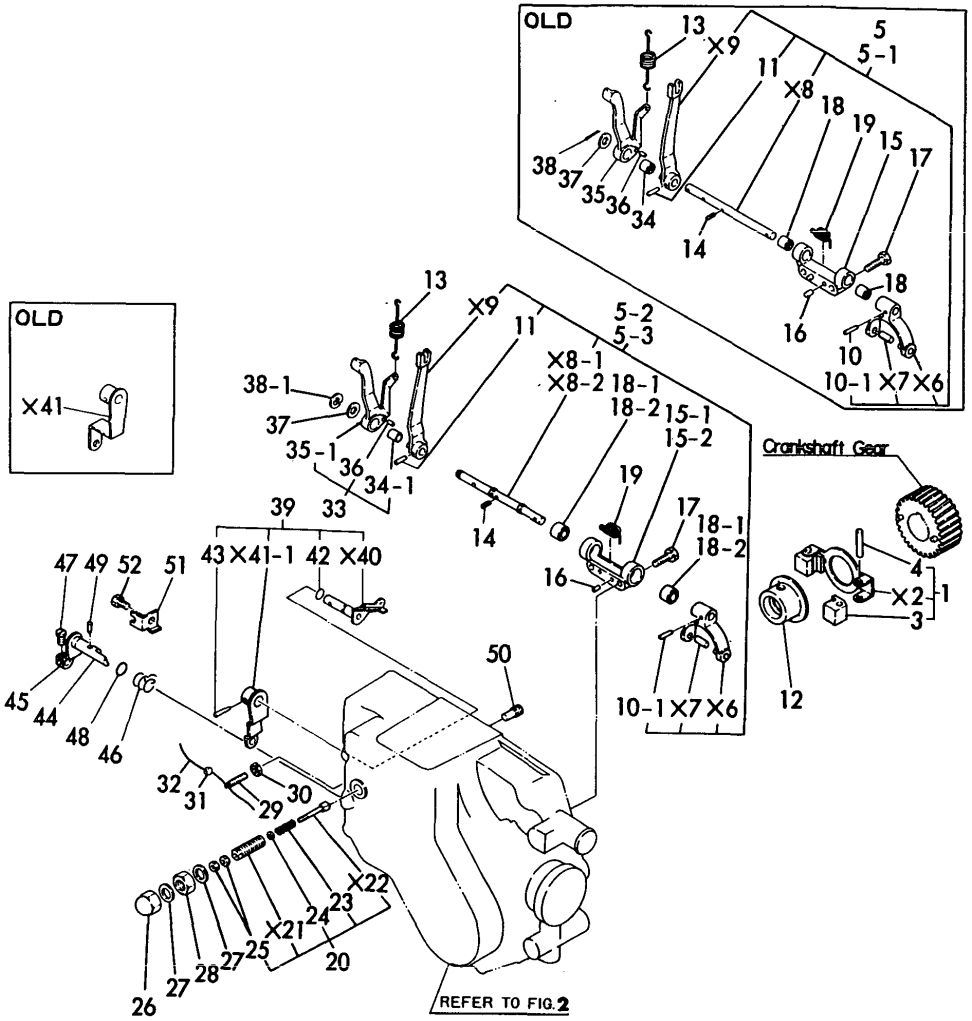

14. GOVERNOR

(A)=3T72HA (D)=
(B)=3T22HA-F (E)=
(C)=3T72HA-S (F)=

REF.	LEV.	PARTS NO.	DESCRIPTION	Q'TY (A)	(B)	(C)	(D)	(E)	(F)	I	R
1	1	721450-61100	SUPPORT ASSY, GOV.	1							
1-1	1	721450-61520	SUPPORT ASSY, GOV.	1						N	
	(A=*)										
1-2	1	121450-61100	SUPPORT ASSY, GOV.	1	1					N	
	(A=*1981.09)										
1-3	1	121450-61101	SUPPORT ASSY, GOV.	1	1	1				S	1
	(A=*1982.12)	(B=*1982.12)									
3	2	104200-61200	WEIGHT, GOVERNOR	2	2						
4	2	172200-61220	PIN, GOVERNOR WEIGHT	2	2						
4-1	2	119660-61220	PIN, GOVERNOR WEIGHT	2	2	2				N	
	(A=E/# C1640)	(B=E/# C1640)									
5	1	721450-66500	LEVER ASSY, GOVERNOR	1							
5-1	1	121450-61000	LEVER ASSY, GOVERNOR	1	1					N	
	(A=*)										
5-2	1	121450-61001	LEVER ASSY, GOVERNOR	1	1					S	2
	(A=*1981.09)	(B=*1981.09)									
5-3	1	121567-61000	LEVER ASSY, GOVERNOR	1		1				N	
	(A=E/# A6798)										
10	2	22322-030160	TAPER PIN 3X16	1	1						
10-1	2	22322-030180	TAPER PIN 3X18	1	1	1				N	
	(A=*)	(B=*)									
11	2	22322-030180	TAPER PIN 3X18	1	1	1					
12	1	121450-61600	SLEEVE, GOVERNOR	1							
12-1	1	129350-61600	SLEEVE, GOVERNOR	1	1	1				R	
	(A=E/#201212)										
13	1	121450-66010	SPRING, REGULATOR	1	1	1					
14	1	22351-030010	SPRING PIN 3X10	1	1	1					
15	1	121450-61620	SUPPORT	1	1						
15-1	1	121520-61620	SUPPORT, LEVER SHAFT	1	1					S	2
	(A=*1981.08)	(B=*1981.08)									
15-2	1	121567-61620	SUPPORT, LEVER SHAFT	1		1				N	
	(A=E/# A6798)										
16	1	22312-040080	PIN 4X8,STRAIGHT	2	2	2					
17	1	26106-060222	BOLT M 6X 22 PLATED	2	2	2					
18	1	121450-61520	NEEDLE BEARING FJ810	2	2						
18-1	1	121520-61520	BEARING, NEEDLE	2	2					S	2
	(A=*1981.08)	(B=*1981.08)									
18-2	1	121567-61640	BUSH, GOV.SHAFT	2		2				N	
	(A=E/# A6798)										
19	1	121450-61631	SPRING	1	1	1					
20	1	121470-66550	TORQUE SPRING ASSY	1							
20-1	1	121470-66551	TORQUE SPRING ASSY	1						N	
	(A=E/#200296)										
20-2	1	121520-66550	TORQUE SPRING ASSY	1	1	1				N	
	(A=*1981.12)										
23	2	121470-66580	SPRING, CONTROLLER	1							
23-1	2	121520-66580	SPRING, CONTROLLER	1	1	1				S	
	(A=*1981.12)										
24	2	124950-66590	SHIM SET	1	1	1					
25	2	26756-050002	LOCK NUT M 5 PLATED	2	2	2					
26	1	26687-120002	CAP NUT M12	1	1	1					

N:Old $\overset{\text{Yes}}{\underset{\text{No}}{\leftrightarrow}}$ New, Q:Old $\overset{\text{No}}{\underset{\text{Yes}}{\leftrightarrow}}$ New, R:Old $\overset{\text{Yes}}{\underset{\text{Yes}}{\leftrightarrow}}$ New, S:Old $\overset{\text{No}}{\underset{\text{No}}{\leftrightarrow}}$ New, W:Add, Z:Discontinued, F:Interchangeable by set, K:Q'ty Change

++ CONTINUE ++

(C)Copy Rights YANMAR CO.,LTD.

Fig.14. GOVERNOR

Fig. 14 GOVERNOR

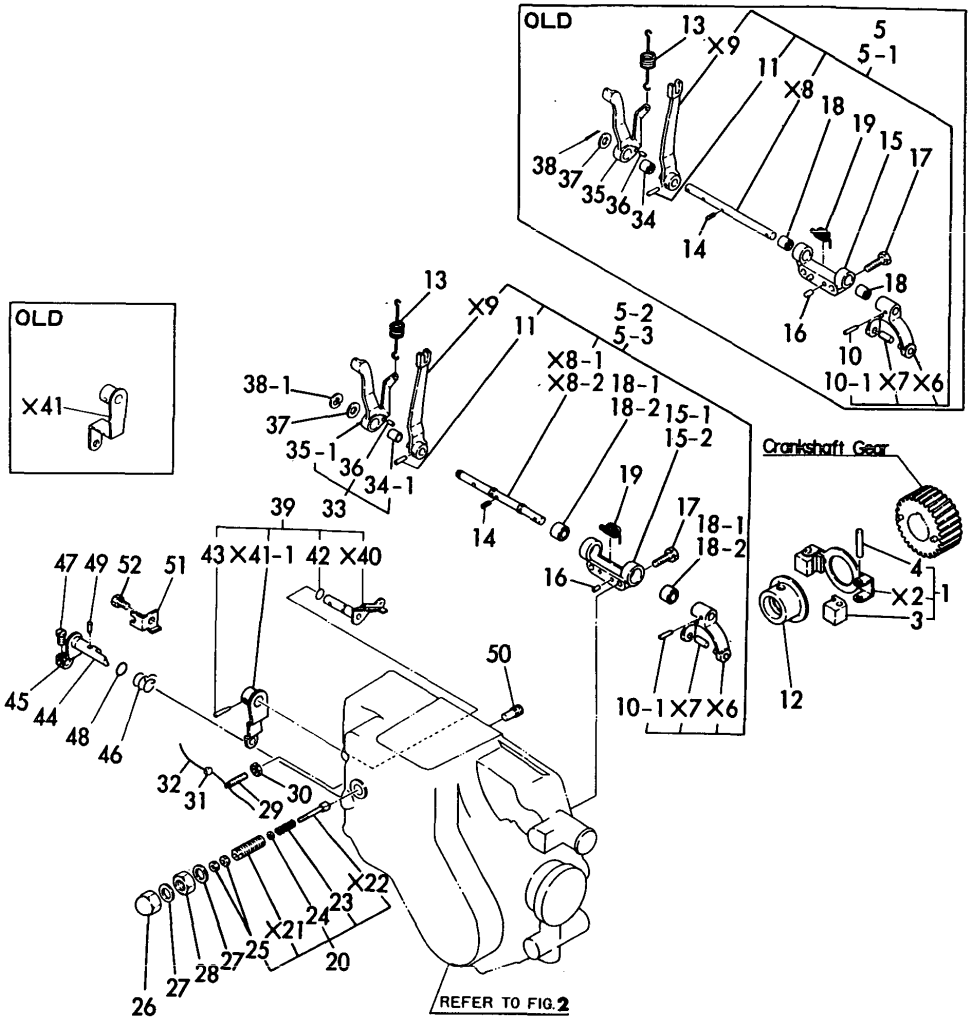

14. GOVERNOR

(A)=3T72HA (D)=
(B)=3T22HA-F (E)=
(C)=3T72HA-S (F)=

REF.	LEV.	PARTS NO.	DESCRIPTION	Q'TY (A)	(B)	(C)	(D)	(E)	(F)	I	R
27	1	43400-500450	SEAL WASHER 12	2	2	2					
28	1	26736-120002	NUT M12	1	1	1					
29	1	121454-66420	ADJUSTER	1	1	1					
30	1	124550-66370	LOCK NUT M 6	1	1	1					
31	1	135210-61090	LEAD	1	1	1					
32	1	22451-100000	WIRE 1.0	1	1						
32-1	1	22451-060000	WIRE 0.6	1	1	1				N	
	(A=*1981.04)	(B=*1981.04)									
33	1	121450-66180	LEVER ASSY, LIMIT	1	1	1					
34	2	121450-61520	NEEDLE BEARING FJ810	1	1						
34-1	2	121450-66170	BUSH, GOV. SHAFT	1	1	1				N	
	(A=*1981.04)	(B=*1981.04)									
35	2	121450-66160	LEVER,LIMIT FUEL OIL	1	1						
36	2	22312-030080	PARALLEL PIN 3X 8	1	1	1					
37	1	22137-080000	WASHER 8, POLISHED	1	1	1					
38	1	22417-300200	COTTER PIN 3.0X20	1	1						
38-1	1	22272-000060	CIRCLIP E- 6	1	1	1				S	2
	(A=*1981.09)	(B=*1981.09)									
39	1	121454-66000	LEVER ASSY,REGULATOR	1	1						
39-1	1	121454-66002	LEVER ASSY,REGULATOR	1	1	1				N	
	(A=E/# B1790)	(B=E/# B1790)									
42	2	24311-000070	O-RING 1A P-7.0	1	1	1					
43	2	22322-030200	TAPER PIN 3X20	1	1	1					
44	1	121551-66520	LEVER, ENG. STOP	1	1	1				W	
	(A=E/#202606)	(B=E/#202606)									
45	1	104211-03770	PLATE	1	1	1				W	
	(A=E/#202606)	(B=E/#202606)									
46	1	121551-66580	SPRING, RETURN	1	1	1				W	
	(A=E/#202606)	(B=E/#202606)									
47	1	26116-050128	BOLT M 5X 12 PLATED	1	1	1				W	
	(A=E/#202606)	(B=E/#202606)									
48	1	24311-000090	O-RING 1A P-9.0	1	1	1				W	
	(A=E/#202606)	(B=E/#202606)									
49	1	22322-030160	TAPER PIN 3X16	1	1	1				W	
	(A=E/#202606)	(B=E/#202606)									
50	1	121250-03640	SCREW	1	1					W	
	(A=E/#202606)	(B=E/#202606)									
50-1	1	124250-03640	SCREW, STOP	1		1				N	
	(A=*)										
51	1	121551-66900	SUPPORT, STOP WIRE	1	1	1				W	
	(A=E/#202606)	(B=E/#202606)									
52	1	26116-060122	BOLT M 6X 12	1	1	1				W	
	(A=E/#202606)	(B=E/#202606)									

N:Old $\overset{\text{Yes}}{\underset{\text{No}}{\leftrightarrow}}$ New, Q:Old $\overset{\text{No}}{\underset{\text{Yes}}{\leftrightarrow}}$ New, R:Old $\overset{\text{Yes}}{\underset{\text{Yes}}{\leftrightarrow}}$ New, S:Old $\overset{\text{No}}{\underset{\text{No}}{\leftrightarrow}}$ New, W:Add, Z:Discontinued, F:Interchangeable by set, K:Q'ty Change

(C)Copy Rights YANMAR CO.,LTD.

Fig.15. ELECTRIC STARTING DEVICE

Fig. 15 ELECTRIC STARTING DEVICE

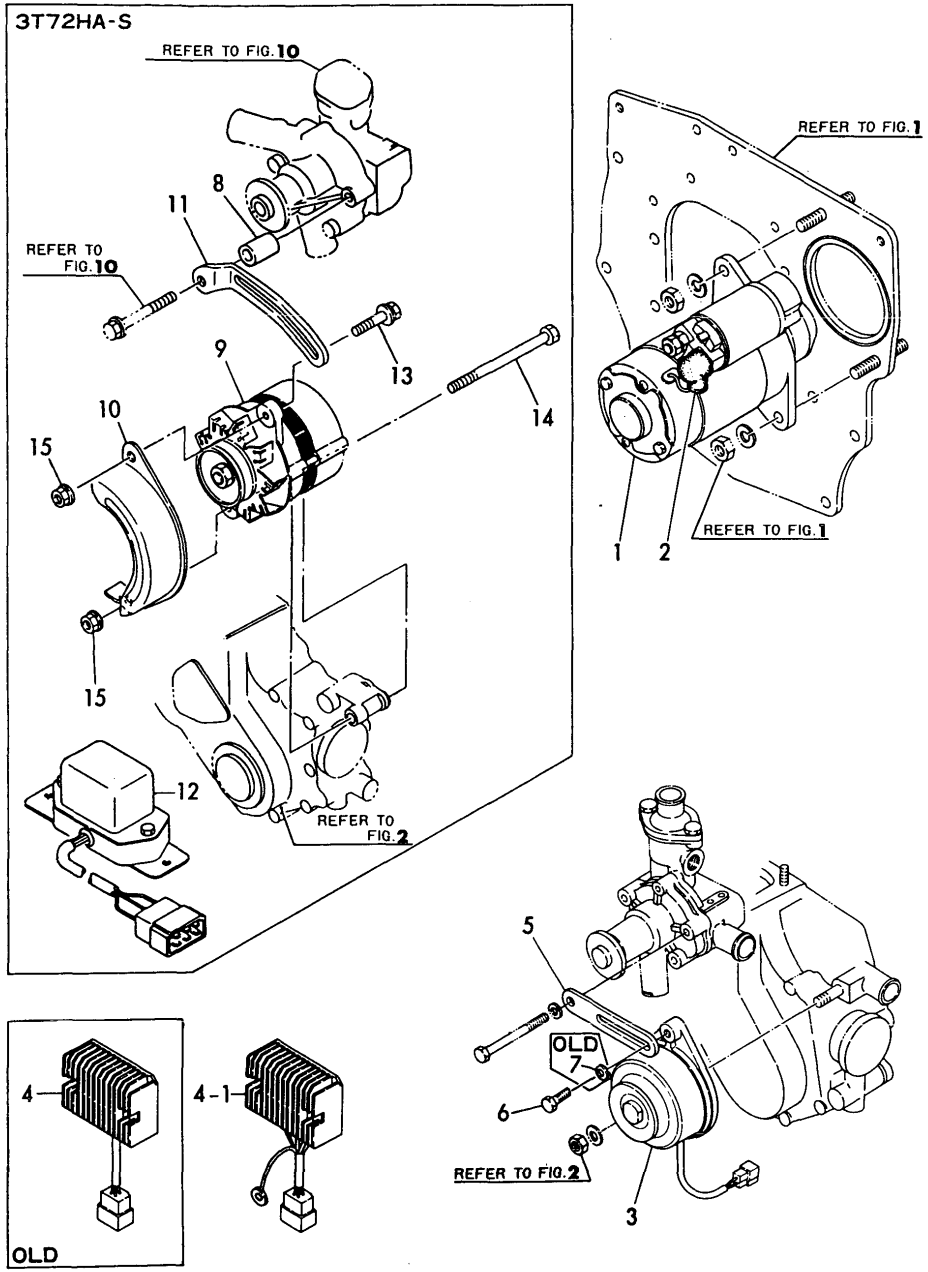

0CT10-G22801 15. ELECTRIC STARTING DEVICE

(A)=3T72HA (D)=
(B)=3T72HA-F (E)=
(C)=3T72HA-S (F)=

REF.	LEV.	PARTS NO.	DESCRIPTION	Q'TY (A)	(B)	(C)	(D)	(E)	(F)	I	R
1	1	121450-77010	STARTER(S114-235A)	1	1	1					
2	1	124160-77020	COVER, TERMINAL	1	1	1					
3	1	121450-77200	GENERATOR 12V-180W	1	1						
4	1	121450-77711	LIMITER, CURRENT	1	1						
4-1	1	121520-77710	LIMITER, CURRENT	1	1					N	
	(A=E/# C6629)	(B=E/# C6629)									
5	1	121450-77330	ADJUSTER, BELT	1	1						
6	1	26014-080282	BOLT M 8X 28	1	1						
7	1	22137-080000	WASHER 8, POLISHED	1	1					Z	
	(A=E/# A3157)	(B=E/# A3157)									
8	1	124950-55900	SPACER			1					
9	1	121492-77200	GENERATOR (LT135-54)			1					
10	1	124610-77210	COVER, GENERATOR			1					
11	1	129354-77330	ADJUSTER, BELT			1					
12	1	124550-77710	REGULATOR (TL1Z-86)			1					
13	1	26014-080252	BOLT M 8X 25			1					
14	1	26116-081202	BOLT M 8X120 PLATED			1					
15	1	26366-080002	NUT M 8			1					

N:Old $\frac{\text{Yes}}{\text{No}}$ New, Q:Old $\frac{\text{No}}{\text{Yes}}$ New, R:Old $\frac{\text{Yes}}{\text{Yes}}$ New, S:Old $\frac{\text{No}}{\text{No}}$ New, W:Add, Z:Discontinued, F:Interchangeable by set, K:Q'ty Change

(C)Copy Rights YANMAR CO.,LTD.

Fig.16. THERMOSTART

Fig. 16 THERMOSTART

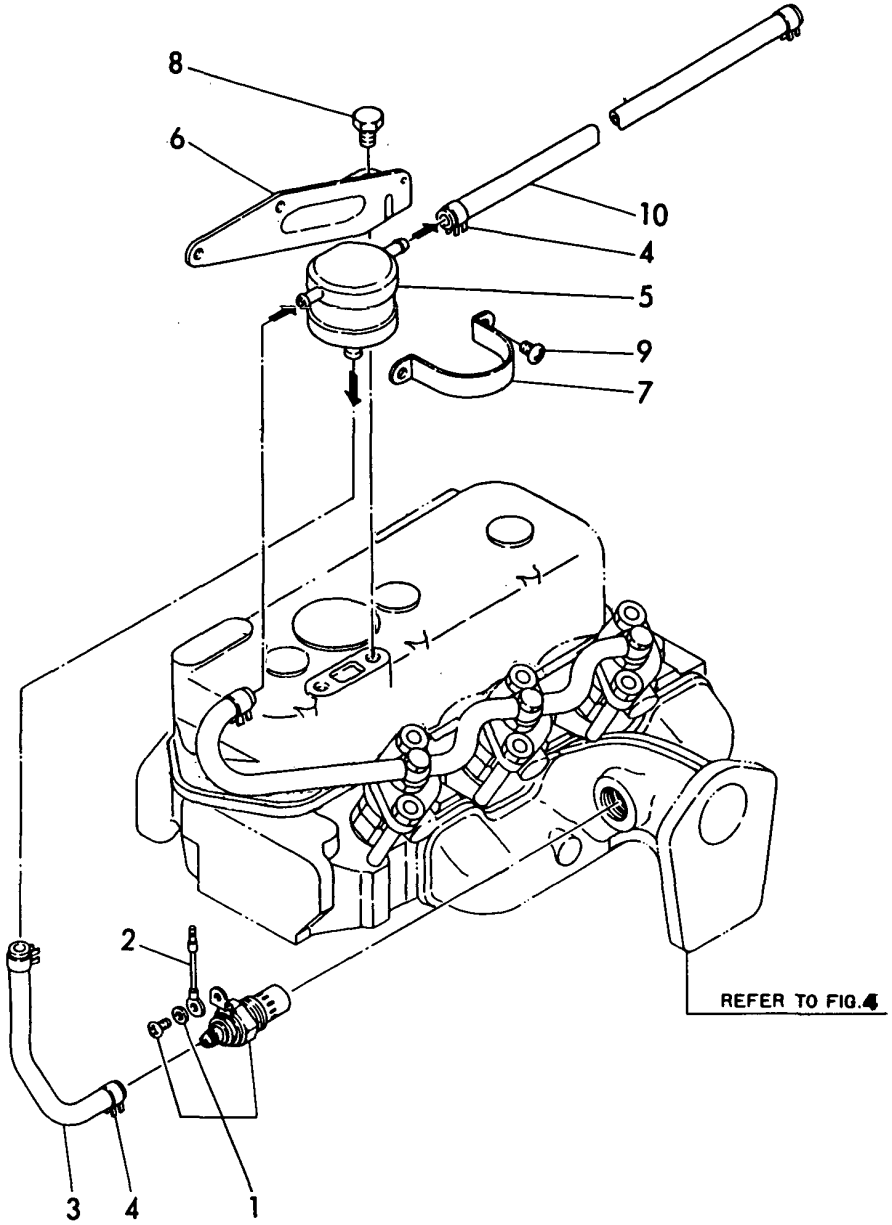

0CT10-G22801 16. THERMOSTART

(A)=3T72HA (D)=
(B)=3T72HA-F (E)=
(C)=3T72HA-S (F)=

REF.	LEV.	PARTS NO.	DESCRIPTION	Q'TY (A)	(B)	(C)	(D)	(E)	(F)	I	R
1	1	121023-77910	PLUG, THERMOSTAT	1	1	1					
2	1	121120-77920	WIRE, THERMOSTAT	1	1	1					
3	1	121450-77700	PIPE, FUEL OIL	1	1	1					
4	1	124060-77680	CLAMP 10	4	4	4					
5	1	121750-77800	TANK, HEADER	1	1	1					
6	1	121450-77810	BRACKET (A)	1	1	1					
7	1	124460-77820	BRACKET(B), TANK	1	1	1					
8	1	26106-080122	BOLT M 8X 12 PLATED	2	2	2					
9	1	26557-060082	SCREW M 6X 8	2	2	2					
10	1	121450-77690	PIPE, FUEL OIL	1	1	1					

N:Old $\frac{\text{Yes}}{\text{No}}$ New, Q:Old $\frac{\text{No}}{\text{Yes}}$ New, R:Old $\frac{\text{Yes}}{\text{Yes}}$ New, S:Old $\frac{\text{No}}{\text{No}}$ New, W:Add, Z:Discontinued, F:Interchangeable by set, K:Q'ty Change

(C)Copy Rights YANMAR CO.,LTD.

Fig.17. LABELS

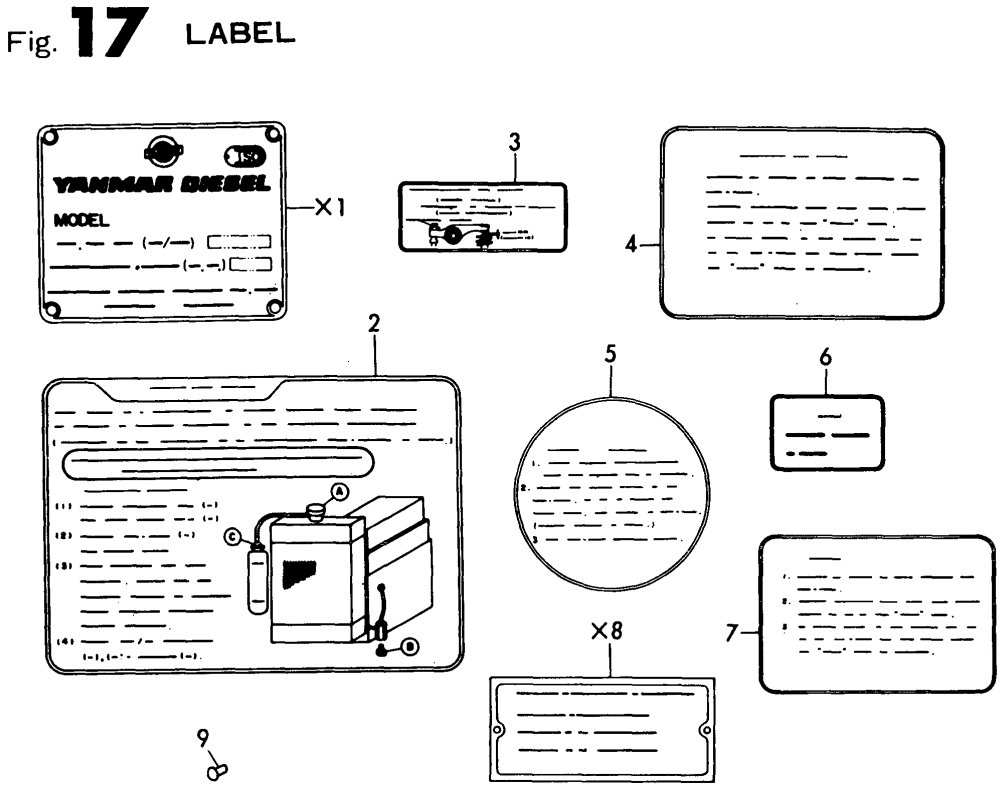

17. LABELS

(A)=3T72HA
(B)=3T72HA-F
(C)=3T72HA-S
(D)=
(E)=
(F)=

REF.	LEV.	PARTS NO.	DESCRIPTION	Q'TY (A)	(B)	(C)	(D)	(E)	(F)	I	R
2A	1	121254-07150	LABEL, WATER DRAIN	1		1					
2B	1	121241-07150	LABEL, WATER DRAIN		1						
3A	1	124064-07160	LABEL, VALVE ADJUST.	1		1					
3B	1	124040-07160	LABEL, VALVE ADJUST.		1						
4A	1	121454-12520	LABEL, AIR-CLEANER	1		1					
4B	1	121440-12480	LABEL, AIR CLEANER(F		1						
5A	1	124764-44800	LABEL, RADIATOR	1		1					
5B	1	124740-44800	LABEL, RADIATOR		1						
6A	1	124764-44920	LABEL, ANTI-FREEZING	1		1					
6B	1	124740-44920	LABEL, ANTI-FREEZING		1						
7A	1	124764-44810	LABEL, RESERVE TANK	1		1					
7B	1	124740-44810	LABEL, SUB-TANK		1						
9	1	102210-07990	RIVET	4	4	4					

N:Old $\overset{\text{Yes}}{\underset{\text{No}}{\leftrightarrows}}$ New, Q:Old $\overset{\text{No}}{\underset{\text{Yes}}{\leftrightarrows}}$ New, R:Old $\overset{\text{Yes}}{\underset{\text{Yes}}{\leftrightarrows}}$ New, S:Old $\overset{\text{No}}{\underset{\text{No}}{\leftrightarrows}}$ New, W:Add, Z:Discontinued, F:Interchangeable by set, K:Q'ty Change

(C)Copy Rights YANMAR CO.,LTD.

Fig.18. STARTER(12V-1.3KW)

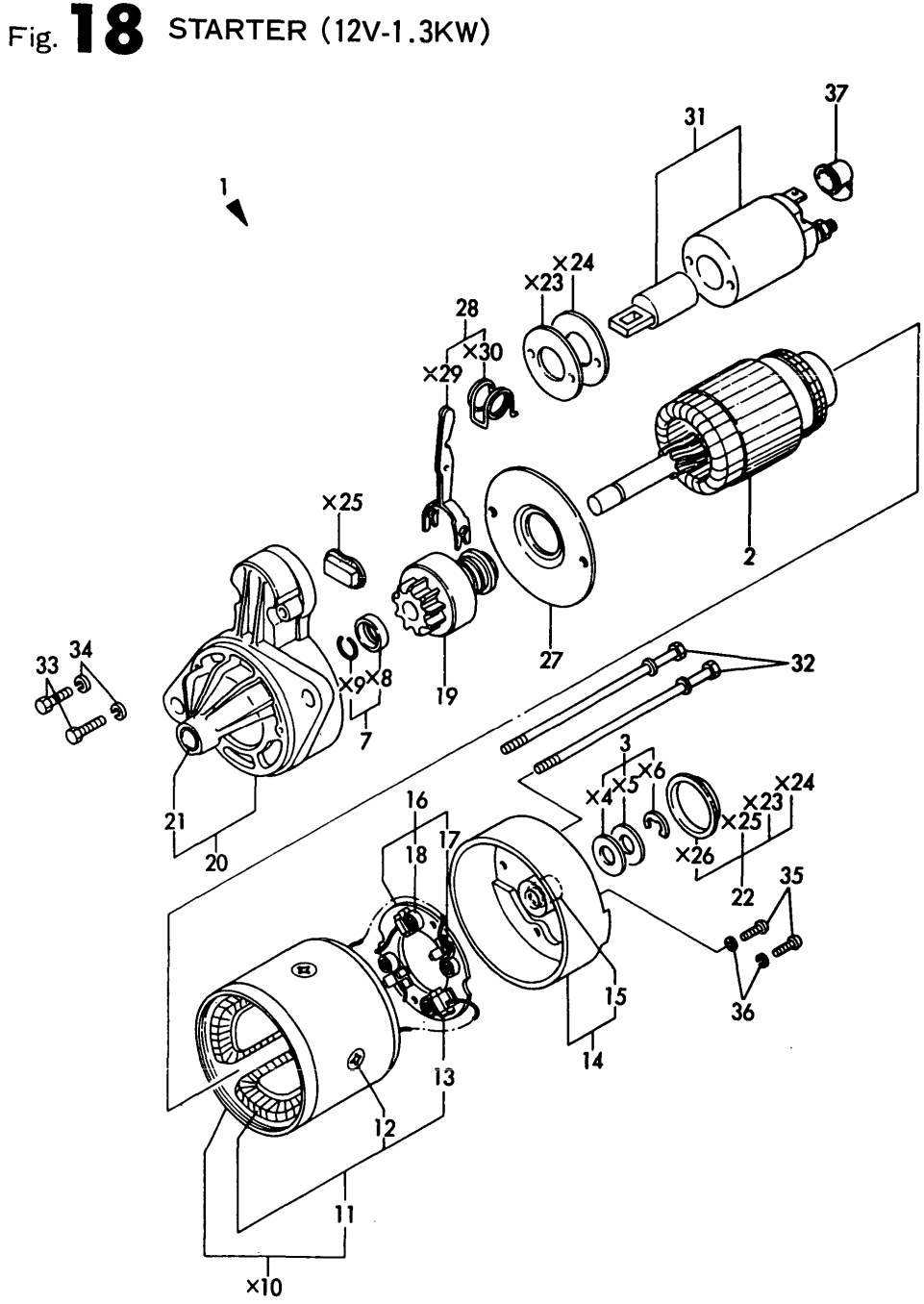

0CT10-G22801 18. STARTER(12V-1.3KW)

(A)=3T72HA (D)=
(B)=3T72HA-F (E)=
(C)=3T72HA-S (F)=

REF.	LEV.	PARTS NO.	DESCRIPTION	Q'TY (A)	(B)	(C)	(D)	(E)	(F)	I	R
1	1	121450-77010	STARTER(S114-235A)	1	1	1					
2	2	X211491001	ARMATURE ASSY	1	1	1					
3	2	X21148110	WASHER SET, THRUST	1	1	1					
7	2	X21147155	STOPPER SET, PINION	1	1	1					
11	3	X211432001	COIL ASSY, FIELD	1	1	1					
12	4	X21147215	SCREW, POLE CORE	4	4	4					
13	4	X21145312	BRUSH (+)	2	2	2					
14	2	X211453002	COVER ASSY, REAR	1	1	1					
15	3	X21145352	METAL	1	1	1					
16	2	X21141360	HOLDER ASSY, BRUSH	1	1	1					
17	3	X21145313	BRUSH (-)	2	2	2					
18	3	X21144314	SPRING, BRUSH	4	4	4					
19	2	X211455003	PINION ASSY	1	1	1					
20	2	X211456009	CASE ASSY, GEAR	1	1	1					
21	3	X21144661	METAL, GEAR CASE	1	1	1					
22	2	X21143963	COVER KIT, DUCT	1	1	1					
27	2	X21143454	PLATE, CENTER	1	1	1					
28	2	X21148652	LEVER SET, SHIFT	1	1	1					
31-1	2	X211497004	SWITCH ASSY, MAGNET	1	1	1					
32	2	X21146815	BOLT, THROUGH	2	2	2					
33	2	26116-060322	BOLT M 6X 32 PLATED	2	2	2					
34	2	22217-060000	SPRING WASHER 6	2	2	2					
35	2	26557-040122	SCREW M 4X 12,PAN HD	2	2	2					
36	2	22217-040000	SPRING WASHER 4	2	2	2					
37	1	X21142742	COVER (A), RUBBER	1	1	1					

N:Old $\overset{\text{Yes}}{\underset{\text{No}}{\leftrightarrow}}$ New, Q:Old $\overset{\text{No}}{\underset{\text{Yes}}{\leftrightarrow}}$ New, R:Old $\overset{\text{Yes}}{\underset{\text{Yes}}{\leftrightarrow}}$ New, S:Old $\overset{\text{No}}{\underset{\text{No}}{\leftrightarrow}}$ New, W:Add, Z:Discontinued, F:Interchangeable by set, K:Q'ty Change

(C)Copy Rights YANMAR CO.,LTD.

Fig.19. GENERATOR

Fig. 19 GENERATOR

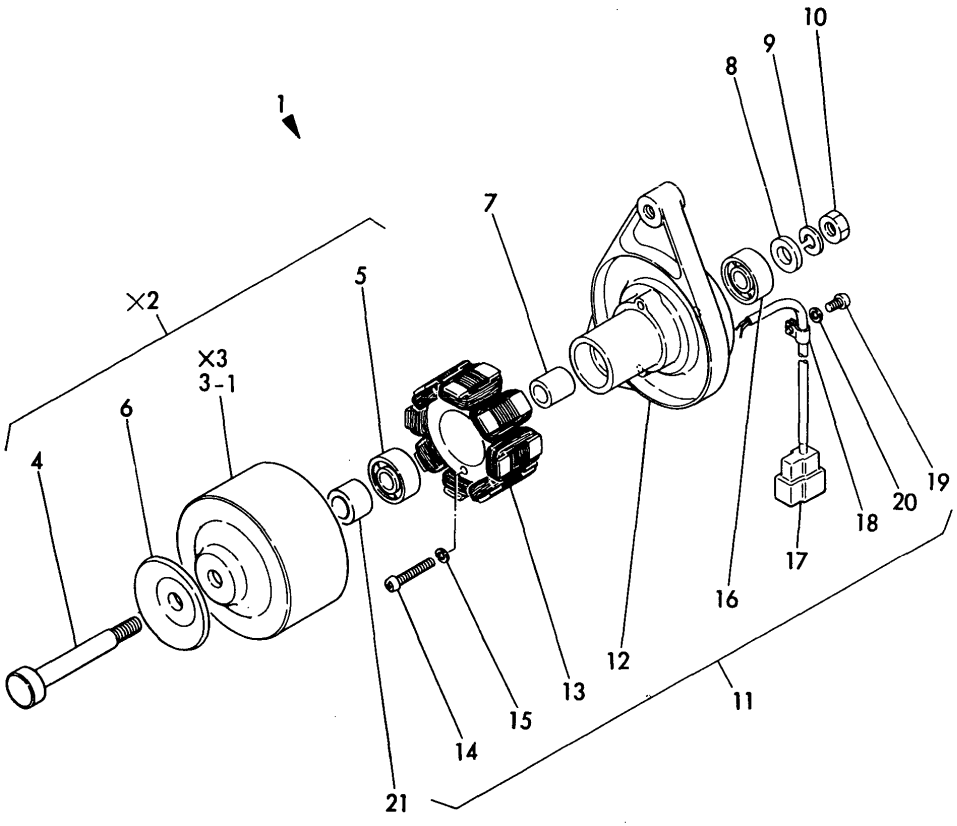

19. GENERATOR

(A)=3T72HA (D)=
(B)=3T72HA-F (E)=
(C)=3T72HA-S (F)=

REF.	LEV.	PARTS NO.	DESCRIPTION	Q'TY (A)	(B)	(C)	(D)	(E)	(F)	I	R
1	1	121450-77200	GENERATOR 12V-180W	1	1						
3-1	2	XM622270000	FLYWHEEL	1	1					R	
(A=FROM 1ST)		(B=FROM 1ST)									
4	3	94210M-13751	SHAFT	1	1						
4-1	3	94210M-42927	SHAFT	1	1					N	
(A=FROM 1ST)		(B=FROM 1ST)									
4-2	2	XM429270000	SHAFT	1	1					R	
(A=FROM 1ST)		(B=FROM 1ST)									
5	3	94210M-86124	BALL BEARING	1	1						
5-1	3	24107-062010	BALL BEARING	1	1					N	
(A=FROM 1ST)		(B=FROM 1ST)									
5-2	2	XM861240000	B.BEARING #6201ZZC3	1	1					N	
(A=FROM 1ST)		(B=FROM 1ST)									
6	3	94210M-42801	PULLEY	1	1						
6-1	3	94210M-42929	PULLEY	1	1					N	
(A=FROM 1ST)		(B=FROM 1ST)									
6-2	2	XM429290000	PLATE, PULLEY	1	1					R	
(A=FROM 1ST)		(B=FROM 1ST)									
7	2	94210M-32983	COLLAR	1	1						
7-1	2	XM329830000	COLLAR	1	1					R	
(A=FROM 1ST)		(B=FROM 1ST)									
8	2	94210M-86025	WASHER	1	1						
8-1	2	XM860250000	WASHER 10	1	1					R	
(A=FROM 1ST)		(B=FROM 1ST)									
9	2	94210M-21932	WASHER, SPRING	1	1						
9-1	2	22217-100000	SPRING WASHER 10	1	1					N	
(A=FROM 1ST)		(B=FROM 1ST)									
10	2	94210M-86372	NUT	1	1						
10-1	2	26706-100002	NUT M10	1	1					N	
(A=FROM 1ST)		(B=FROM 1ST)									
11	2	94210M-51416	PLATE ASSY	1	1						
11-1	2	XM514160000	PLATE ASSY	1	1					R	
(A=FROM 1ST)		(B=FROM 1ST)									
12	3	94210M-51417	PLATE	1	1						
12-1	3	XM514170000	PLATE	1	1					R	
(A=FROM 1ST)		(B=FROM 1ST)									
13	3	94210M-51418	CORE ASSY	1	1						
13-1	3	XM514180000	STATOR	1	1					R	
(A=FROM 1ST)		(B=FROM 1ST)									
14	3	26557-040252	SCREW M 4X 25	2	2						
15	3	22217-040000	SPRING WASHER 4	2	2						
16	3	94210M-86124	BALL BEARING	1	1						
16-1	3	24101-062010	BALL BEARING	1	1					N	
(A=FROM 1ST)		(B=FROM 1ST)									
16-2	3	XM861240000	B.BEARING #6201ZZC3	1	1					N	
(A=FROM 1ST)		(B=FROM 1ST)									
17	3	94210M-96717	COUPLER	1	1						
17-1	3	XM967170000	COUPLER	1	1					R	
(A=FROM 1ST)		(B=FROM 1ST)									
18	3	94210M-06900	CLAMP	1	1						
18-1	3	XM069000000	CLAMP	1	1					R	

N:Old $\xleftarrow[\text{No}]{\text{Yes}}$ New, Q:Old $\xleftarrow[\text{Yes}]{\text{No}}$ New, R:Old $\xleftarrow[\text{Yes}]{\text{Yes}}$ New, S:Old $\xleftarrow[\text{No}]{\text{No}}$ New, W:Add, Z:Discontinued, F:Interchangeable by set, K:Q'ty Change

++ CONTINUE ++

(C)Copy Rights YANMAR CO.,LTD.

Fig.19. GENERATOR

Fig. 19 GENERATOR

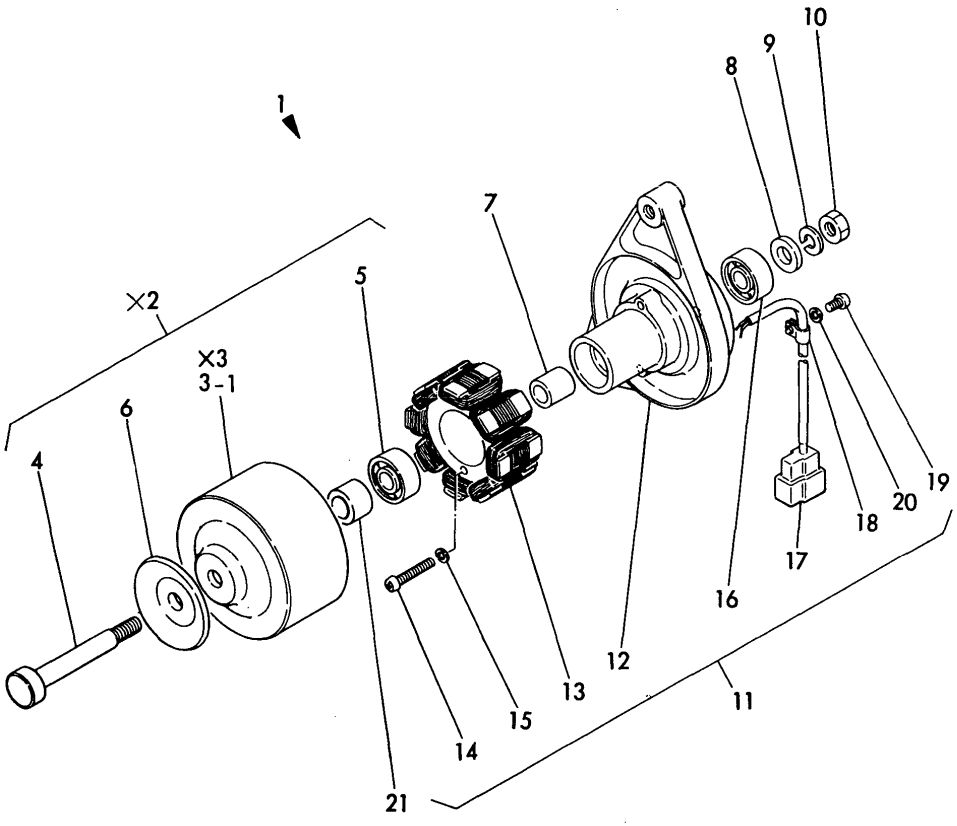

0CT10-G22801 19. GENERATOR

(A)=3T72HA (D)=
(B)=3T72HA-F (E)=
(C)=3T72HA-S (F)=

REF.	LEV.	PARTS NO.	DESCRIPTION	Q'TY (A)	(B)	(C)	(D)	(E)	(F)	I	R
	(A=FROM 1ST)	(B=FROM 1ST)									
19	3	26557-040082	SCREW M 4X 8	1	1						
20	3	22217-040000	SPRING WASHER 4	1	1						
21	2	94210M-42802	COLLAR	1	1						
21-1	2	XM428020000	COLLAR	1	1					R	
	(A=FROM 1ST)	(B=FROM 1ST)									

N:Old ◄Yes/No► New, Q:Old ◄No/Yes► New, R:Old ◄Yes/Yes► New, S:Old ◄No/No► New, W:Add, Z:Discontinued, F:Interchangeable by set, K:Q'ty Change

(C)Copy Rights YANMAR CO.,LTD.

Fig.20. GENERATOR (FOR 3T72HA-S)

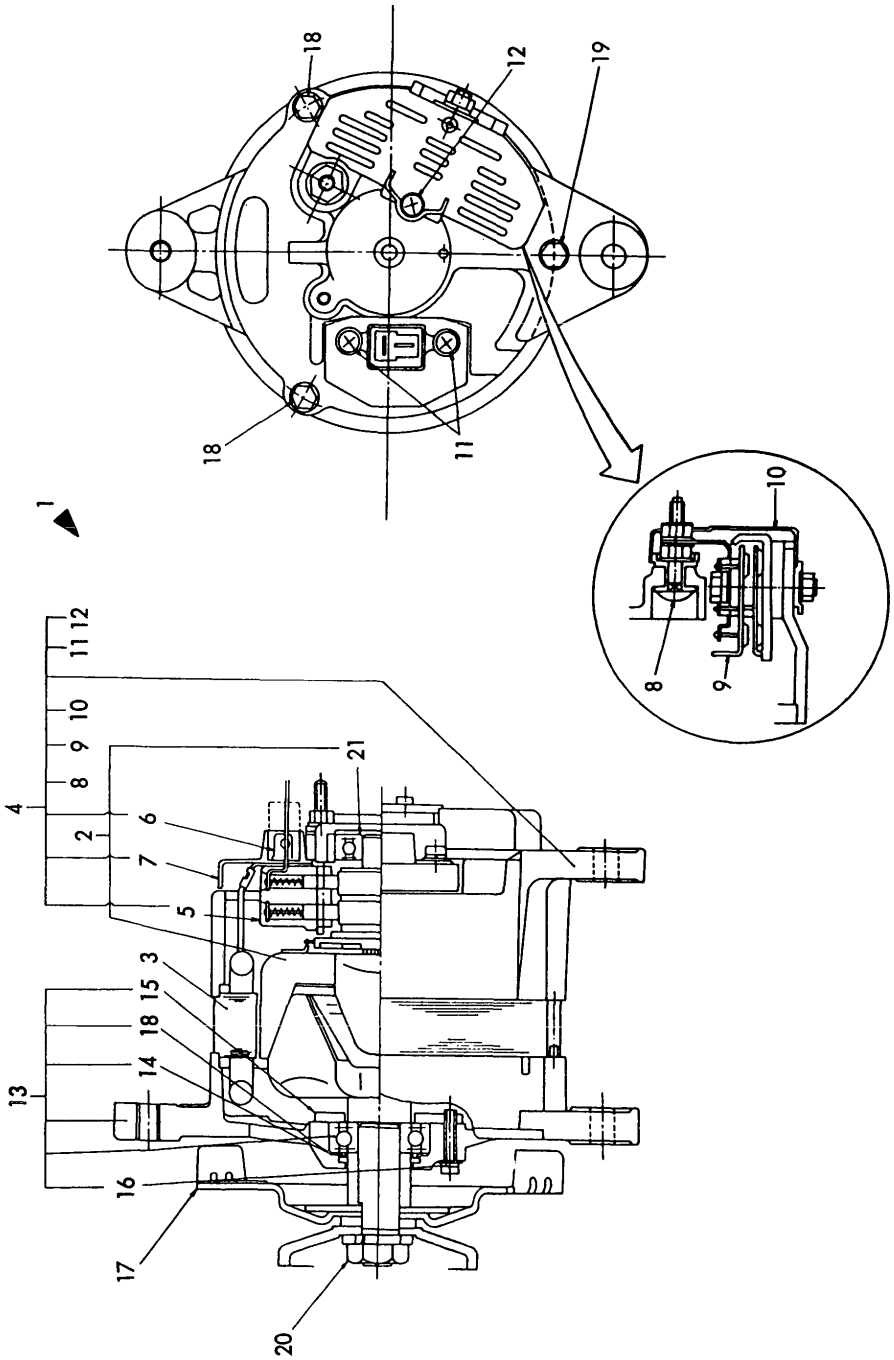

Fig. 20 GENERATOR (FOR 3T72HA-S)

0CT10-G22801

20. GENERATOR (FOR 3T72HA-S)

(A)=3T72HA (D)=
(B)=3T72HA-F (E)=
(C)=3T72HA-S (F)=

REF.	LEV.	PARTS NO.	DESCRIPTION	Q'TY (A)	(B)	(C)	(D)	(E)	(F)	I	R
1	1	121492-77200	GENERATOR (LT135-54)			1					
2	2	XLT135N1100	ROTOR ASSY			1					
3	2	XL135N2200	STATOR ASSY			1					
4	2	XL135N1300	COVER ASSY			1					
5	3	XL135N1301	BRUSH ASSY			1					
6	3	XL135N1302	N-TERMINAL			1					
7	3	XL135N1303	COVER			1					
8	3	XL1255310A	BOLT ASSY, TERMINAL			1					
9	3	XL1258320	DIODE			1					
10	3	XL1256338	COVER			1					
11	3	26557-040202	SCREW M 4X 20			2					
12	3	26557-040082	SCREW M 4X 8			1					
13	2	XL1255400	COVER ASSY, FRONT			1					
14	3	XL1151403	RETAINER, GASKET			1					
15	3	XL1307404Y	RETAINER			1					
16	3	26557-040202	SCREW M 4X 20			3					
17	2	XL1151552	PULLEY ASSY			1					
18	2	XL1251801	BOLT, THROUGH			2					
19	2	XL1251802	BOLT, THROUGH			1					
20	2	XB444001A	NUT SET, PULLEY			1					
21	2	X6201SD	BALL BEARING			1					

N:Old ←Yes/No→ New, Q:Old ←No/Yes→ New, R:Old ←Yes/Yes→ New, S:Old ←No/No→ New, W:Add, Z:Discontinued, F:Interchangeable by set, K:Q'ty Change

(C)Copy Rights YANMAR CO.,LTD.

Fig.21. GASKET SET (FOR ENGINE)

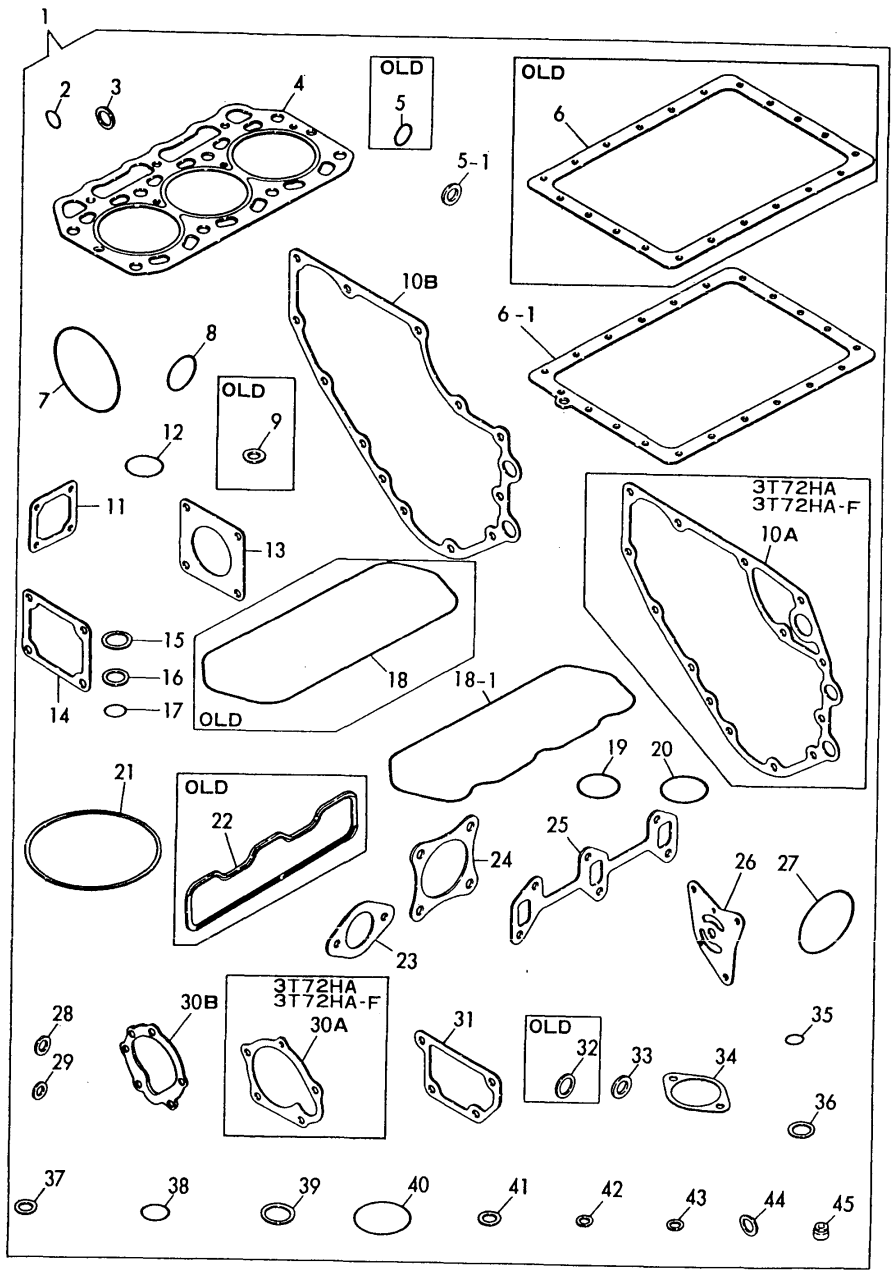

0CT10-G22801 21. GASKET SET (FOR ENGINE)

(A)=3T72HA (D)=
(B)=3T72HA-F (E)=
(C)=3T72HA-S (F)=

REF.	LEV.	PARTS NO.	DESCRIPTION	Q'TY (A)	(B)	(C)	(D)	(E)	(F)	I	R
1A	1	721454-92600	GASKET SET	1	1						1
1A-1	1	721454-92601	GASKET SET	1	1					N	1
	(A=*)	(B=*)									
1B	1	721454-92610	GASKET SET			1					1
2	2	24311-000100	O-RING 1A P-10.0	2	2	2					
3	2	121450-01980	GASKET	1	1	1					
4	2	121450-01330	GASKET, CYL. HEAD	1							
4-1	2	121450-01331	GASKET, CYL. HEAD	1	1					N	
	(A=E/#201068)										
4-2	2	121000-01330	GASKET, CYL. HEAD	1	1	1				N	
	(A=E/# A5547)	(B=E/# A5547)									
5	2	24311-000140	O-RING 1A P-14.0	1							
5-1	2	43400-500450	SEAL WASHER 12	1	1	1				S	
	(A=E/#200995)										
6	2	121450-01751	GASKET, OIL SUMP	1							
6-1	2	121000-01750	GASKET, OIL SUMP	1	1	1				N	
	(A=E/#200995)										
7	2	105225-02020	O-RING	1	1	1					
8	2	121450-34840	GASKET	1	1	1					
9	2	43400-500410	SEAL WASHER 8	4	4					Z	
	(A=*)	(B=*)									
10A	2	121450-01511	GASKET, GEAR HOUSING	1	1						
10B	2	121575-01510	GASKET, GEAR HOUSING			1					
11	2	121450-01531	GASKET, COVER	1	1	1					
12A	2	24341-000260	O-RING 1A S-26.0	1	1						
12B	2	24341-000460	O-RING 1A S-46.0			1					
13	2	124240-01882	GASKET, HO-P	2	2	2					
13-1	2	124240-01883	GASKET, (NON ASB.)	2	2	2				R	
	(A=E/# D0404)	(B=E/# D0404)	(C=E/# D0404)								
14	2	121450-11680	GASKET, COVER	1	1	1					
15	2	124950-11450	GASKET, CHAMBER	6	6	6					
16	2	101147-11490	INSULATOR	3	3	3					
17	2	24311-000120	O-RING 1A P 12.0	3	3	3					
18	2	121450-11310	GASKET, BONNET	1	1						
18-1	2	121476-11310	GASKET, BONNET	1	1	1				S	
	(A=E/# B5567)	(B=E/# B5567)									
19	2	24321-000350	O-RING 1A G-35.0	1							
19-1	2	121420-01760	O-RING	1	1					N	
	(A=*1980.04)										
19-2	2	24311-000320	O-RING 1A P-32.0	1	1	1				R	
	(A=E/# B2608)	(B=E/# B2608)									
20	2	24341-000400	O-RING 1A S-40.0	1	1	1					
21	2	124064-12430	GASKET, CLEANER	2	2	2					
22	2	121450-12710	GASKET, SUC.MANIFOLD	1	1					Z	
	(A=*)	(B=*)									
23	2	124067-12050	GASKET	1	1	1					
24	2	121450-13200	GASKET, SILENCER	1	1	1					
24-1	2	121450-13201	GASKET, SILENCER	1	1	1				N	
	(A=E/# D0413)	(B=E/# D0413)	(C=E/# D0413)								
25	2	121450-13250	GASKET, EXH.MANIFOLD	1	1	1					
26	2	121450-32021	GASKET, L.O.PUMP	1	1	1					

N:Old $\overset{\text{Yes}}{\underset{\text{No}}{\leftrightarrow}}$ New, Q:Old $\overset{\text{No}}{\underset{\text{Yes}}{\leftrightarrow}}$ New, R:Old $\overset{\text{Yes}}{\underset{\text{Yes}}{\leftrightarrow}}$ New, S:Old $\overset{\text{No}}{\underset{\text{No}}{\leftrightarrow}}$ New, W:Add, Z:Discontinued, F:Interchangeable by set, K:Q'ty Change

++ CONTINUE ++

(C)Copy Rights YANMAR CO.,LTD.

Fig.21. GASKET SET (FOR ENGINE)

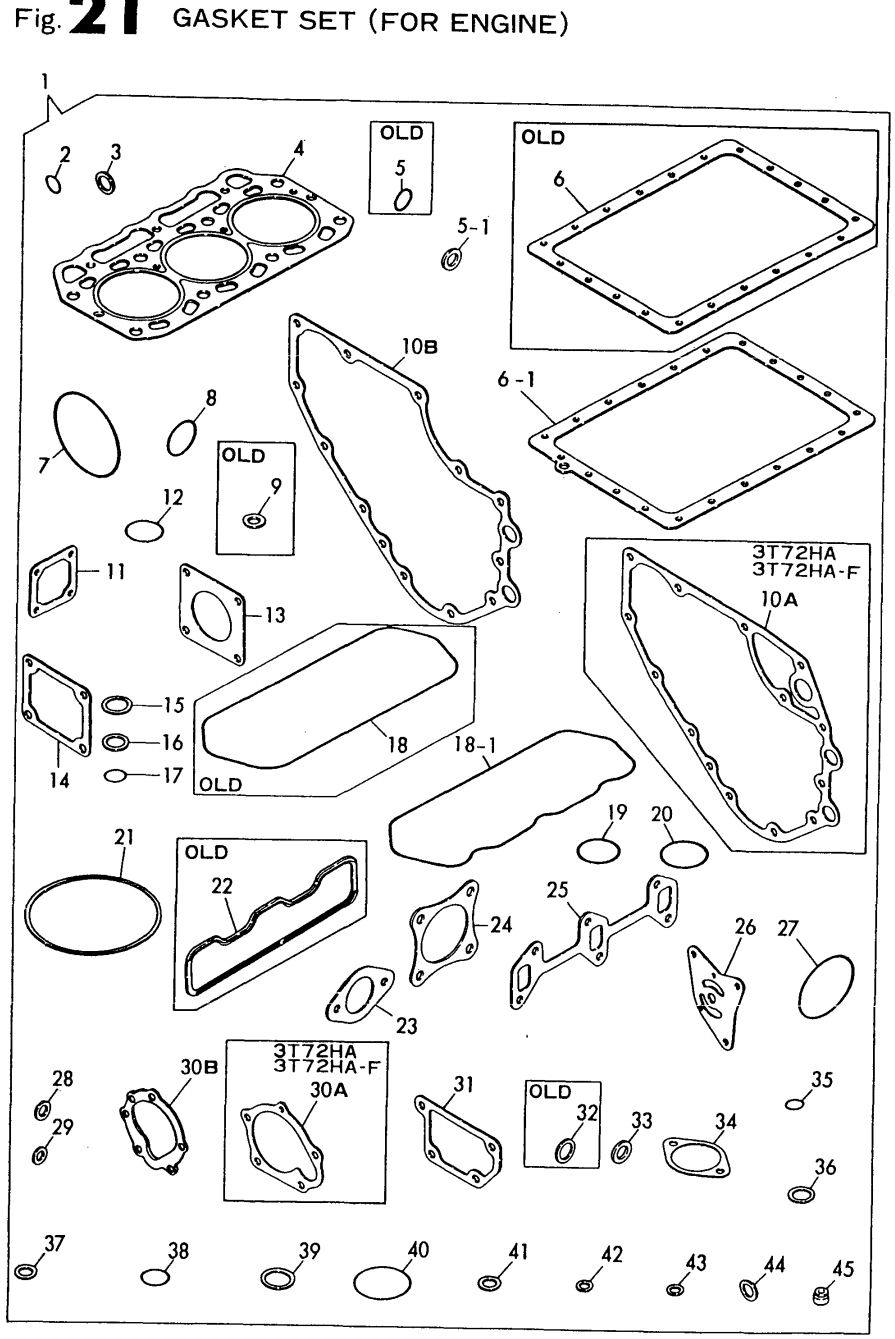

21. GASKET SET (FOR ENGINE)

(A)=3T72HA (D)=
(B)=3T72HA-F (E)=
(C)=3T72HA-S (F)=

REF.	LEV.	PARTS NO.	DESCRIPTION	Q'TY (A)	(B)	(C)	(D)	(E)	(F)	I	R
27	2	124450-35110	O-RING, L.O.STRAINER	1	1	1					
28	2	23414-100000	GASKET 10, ROUND	2	2	2					
29	2	23414-080000	GASKET 8, ROUND	6	6	6					
30A	2	121023-42050	GASKET	1	1						
30A-1	2	121450-42050	GASKET	1	1					N	
	(A=*1982.)	(B=*1982.)									
30A-2	2	121023-42051	GASKET	1	1					N	
	(A=*)	(B=*)									
30B	2	121000-42051	GASKET, C.W.PUMP			1					
31	2	121450-44410	GASKET, BRACKET	1	1	1					
32	2	23414-160000	GASKET 16, ROUND	1						Z	
	(A=*)										
33	2	124465-44950	GASKET 16	1	1						
33-1	2	124465-44950	GASKET 16	2	2	2				K	
	(A=*)	(B=*)									
34	2	124736-49540	GASKET	1							
34-1	2	129350-49540	GASKET, THERMO.COVER	1	1	1				S	
	(A=*1981.)	(B=*1981.)									
34-2	2	129350-49541	GASKET, (NON ASB.)	1	1	1				R	
	(A=E/# D0404)	(B=E/# D0404)	(C=E/# D0404)								
35	2	24311-000120	O-RING 1A P 12.0	1	1	1					
36	2	124950-51270	GASKET	3	3	3					
37	2	124550-51350	GASKET, DELIVERY	3	3	3					
38	2	124550-51370	O-RING, DELIVERY	3	3	3					
39	2	172100-53200	GASKET	3	3	3					
40	2	102103-55520	O-RING	1	1	1					
41	2	104200-59170	GASKET 12	2	2	2					
42	2	43400-500390	SEAL WASHER 6	1	1	1					
43	2	23414-080012	GASKET 8	6	6	6					
44	2	43400-500450	SEAL WASHER 12	2	2	2					
45	2	124950-11340	SEAL, VALVE STEM			6					

N:Old $\frac{\text{Yes}}{\text{No}}$ New, Q:Old $\frac{\text{No}}{\text{Yes}}$ New, R:Old $\frac{\text{Yes}}{\text{Yes}}$ New, S:Old $\frac{\text{No}}{\text{No}}$ New, W:Add, Z:Discontinued, F:Interchangeable by set, K:Q'ty Change

(C)Copy Rights YANMAR CO.,LTD.

Fig.22. REPAIR KIT (FOR ENGINE)

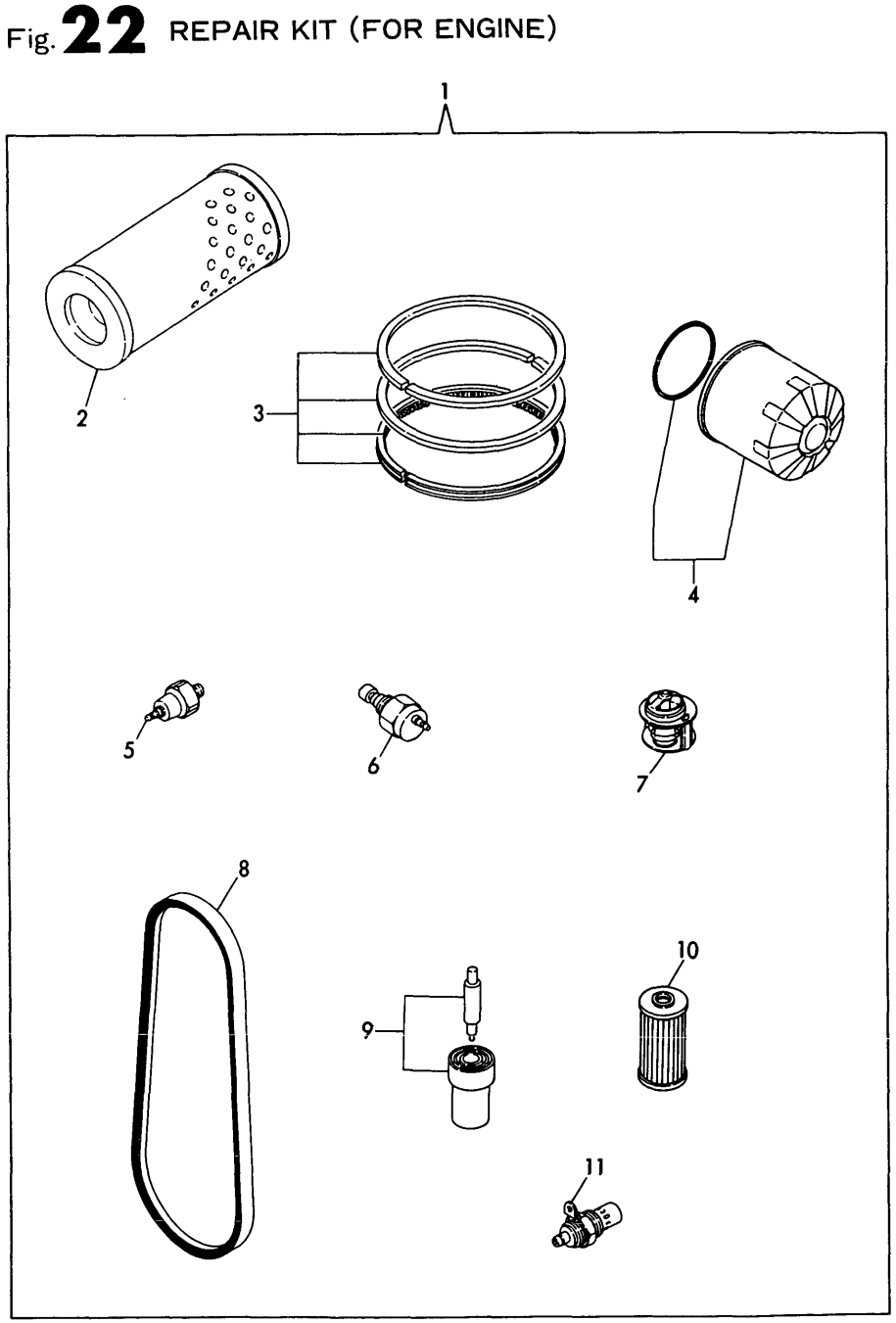

0CT10-G22801 22. REPAIR KIT (FOR ENGINE)

(A)=3T72HA (D)=
(B)=3T72HA-F (E)=
(C)=3T72HA-S (F)=

REF.	LEV.	PARTS NO.	DESCRIPTION	Q'TY (A)	(B)	(C)	(D)	(E)	(F)	I	R
1A	1	721454-92500	REPAIR SET	1	1						1
1B	1	721454-92740	REPAIR SET			1					1
2	2	124064-12510	ELEMENT, AIR CLEANER	1	1	1					
3	2	721450-22500	RING SET	3	3	3					
4	2	124550-35110	ELEMENT, LUB. OIL	1	1	1					
5	2	124160-39450	SWITCH, OIL PRESSURE	1	1	1					
6	2	121250-44900	SENDER, C.W. TEMP	1							
6-1	2	121250-44901	SWITCH, THERMO.	1	1	1				R	
	(A=E/#200105)										
7	2	129350-49800	THERMOSTAT	1	1	1					
8A	2	121450-42290	V-BELT (A-33)	1							
8A-1	2	121023-42290	V-BELT (A-33)	1	1					R	
	(A=*1980.)										
8B	2	171022-44960	V-BELT (A-35)			1					
9	2	124770-53000	NOZZLE ASSY,F.INJECT	3	3	3					
10	2	124550-55700	ELEMENT, FUEL	1	1	1					
11	2	121023-77910	PLUG, THERMOSTAT	1	1	1					

N:Old $\xleftarrow[\text{No}]{\text{Yes}}$ New, Q:Old $\xleftarrow[\text{Yes}]{\text{No}}$ New, R:Old $\xleftarrow[\text{Yes}]{\text{Yes}}$ New, S:Old $\xleftarrow[\text{No}]{\text{No}}$ New, W:Add, Z:Discontinued, F:Interchangeable by set, K:Q'ty Change

(C)Copy Rights YANMAR CO.,LTD.

Fig.23. THROTTLE (EXCEPT ENGLAND)

Fig. 23 THROTTLE (EXCEPT ENGLAND)

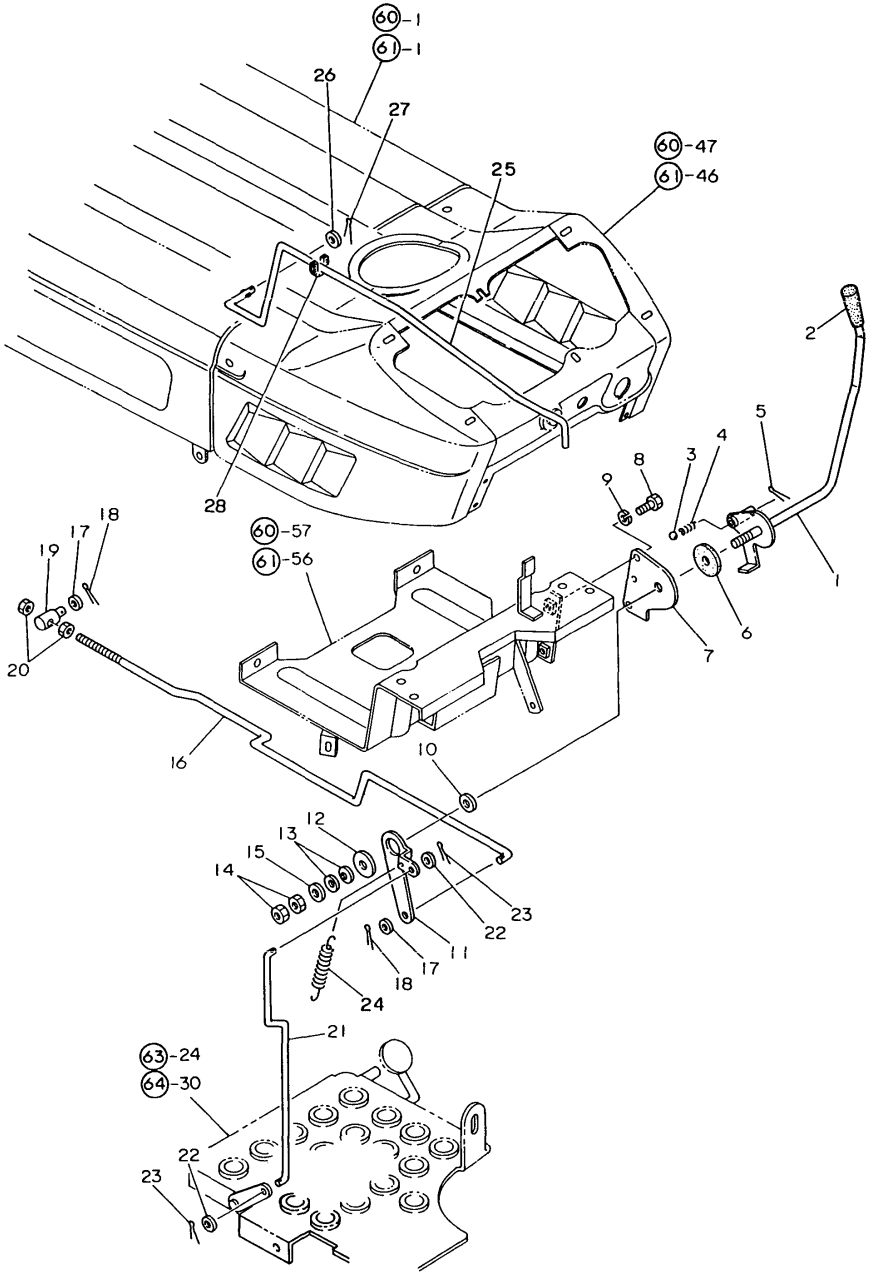

23. THROTTLE (EXCEPT ENGLAND)

(A)=YM186 (FLOOR (D)=YM186D(COLUM
(B)=YM186D(FLOOR (E)=
(C)=YM186 (COLUM (F)=

REF.	LEV.	PARTS NO.	DESCRIPTION	Q'TY (A)	(B)	(C)	(D)	(E)	(F)	I	R
1	1	194275-01110	LEVER, THROTTLE	1	1						
1-1	1	194170-01110	LEVER, THROTTLE	1	1	1	1			N	
	(A=T/# 00504)	(B=T/# 01191)									
2	1	194464-01190	KNOB, THROTTLE LEVER	1	1	1	1				
3	1	24190-110001	BALL 11/32, STEEL	1	1	1	1				
4	1	194080-27480	SPRING	1	1	1	1				
4-1	1	194197-01160	SPRING	1	1	1	1			S	
	(A=*1980.)	(B=*1980.)	(C=*1980.) (D=*1980.)								
5	1	22417-160180	COTTER PIN 1.6X18	1	1	1	1				
6	1	194145-01260	PLATE, FRICTION	1	1	1	1				
6-1	1	198220-01261	PLATE, FRICTION	1	1	1	1			N	
	(A=T/# 00889)	(B=T/# 02345)	(C=T/# 20988) (D=T/# 42947)								
7	1	194446-01140-U	BRACKET, THRTL LEVER	1	1	1	1				
8	1	26116-080202	BOLT M 8X 20 PLATED	2	2	2	2				
8-1	1	26013-080202	BOLT W/WASHER M8X20	2	2	2	2			N	
	(A=*)	(B=*)	(C=*) (D=*)								
8-2	1	26106-080202	BOLT M 8X 20 PLATED	2	2	2	2			N	
	(A=T/# 00909)	(B=T/# 02372)	(C=T/# 20991) (D=T/# 42957)								
9	1	22217-080000	SPRING WASHER 8	2	2	2	2			Z	
	(A=*)	(B=*)	(C=*) (D=*)								
10	1	194150-01270	SPACER 20	1	1	1	1				
11	1	194275-01352	LEVER, THROTTLE LINK	1	1	1	1				
12	1	22157-100000	WASHER 10	1	1	1	1				
13	1	194740-00160	WASHER 10, CONICAL	2	2	2	2				
14	1	26716-100002	NUT M10	2	2	2	2				
15	1	22137-100000	WASHER 10,POLISHED	1	1	1	1				
16	1	194446-01320	ROD, THROTTLE LINK	1	1	1	1				
17-1	1	22137-080000	WASHER 8, POLISHED	2	2	2	2				
18	1	22417-160180	COTTER PIN 1.6X18	2	2	2	2				
19	1	194150-01370	ADJUSTER	1	1	1	1				
20	1	26716-080002	NUT M 8	2	2	2	2				
21	1	194446-01440-U	ROD, THROTTLE LINK	1	1	1	1				
22-1	1	22137-060000	WASHER 6, POLISHED	2	2	2	2				
23	1	22417-160180	COTTER PIN 1.6X18	2	2	2	2				
24	1	194750-04400	SPRING, RETURN	1	1	1	1				
25	1	194440-01510	ROD, DECOMPRESSION	1	1	1	1				
25-1	1	194440-01511	ROD, DECOMPRESSION	1	1	1	1			N	
	(A=T/# 00504)	(B=T/# 01191)	(C=T/# 20101) (D=T/# 40229)								
26	1	23418-060000	GASKET 6, NYLON	1	1	1	1				
27	1	22417-160180	COTTER PIN 1.6X18	1	1	1	1				
28	1	194440-01550	GROMMET	1	1	1	1				

N:Old $\xleftarrow[\text{No}]{\text{Yes}}$ New, Q:Old $\xleftarrow[\text{Yes}]{\text{No}}$ New, R:Old $\xleftarrow[\text{Yes}]{\text{Yes}}$ New, S:Old $\xleftarrow[\text{No}]{\text{No}}$ New, W:Add, Z:Discontinued, F:Interchangeable by set, K:Q'ty Change

(C)Copy Rights YANMAR CO.,LTD.

Fig.24. THROTTLE (ENGLAND)

Fig. 24 THROTTLE (ENGLAND)

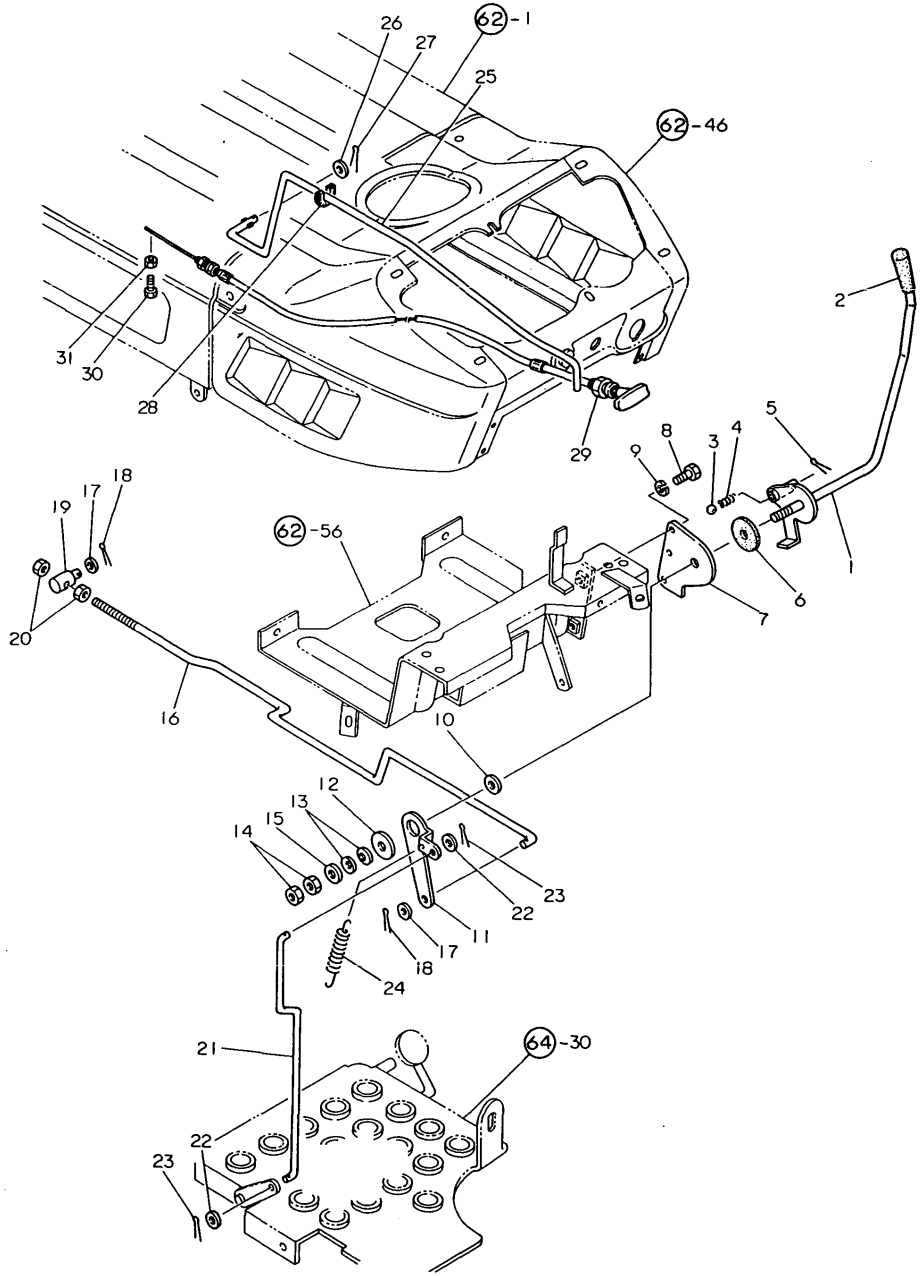

0CT10-G22801

24. THROTTLE (ENGLAND)

(A)=YM186 (FLOOR (D)=YM186D(COLUM
(B)=YM186D(FLOOR (E)=
(C)=YM186 (COLUM (F)=

REF.	LEV.	PARTS NO.	DESCRIPTION	Q'TY (A)	(B)	(C)	(D)	(E)	(F)	I	R
1	1	194170-01110	LEVER, THROTTLE	1	1	1	1				
2	1	194464-01190	KNOB, THROTTLE LEVER	1	1	1	1				
3	1	24190-110001	BALL 11/32, STEEL	1	1	1	1				
4	1	194197-01160	SPRING	1	1	1	1				
5	1	22417-160180	COTTER PIN 1.6X18	1	1	1	1				
6	1	194145-01260	PLATE, FRICTION	1	1	1	1				
6-1	1	198220-01261	PLATE, FRICTION	1	1	1	1			N	
	(A=T/# 00889)	(B=T/# 02345)	(C=T/# 20988)	(D=T/# 42947)							
7	1	194446-01140-U	BRACKET, THRTL LEVER	1	1	1	1				
8	1	26116-080202	BOLT M 8X 20 PLATED	2	2	2	2				
8-1	1	26013-080202	BOLT W/WASHER M8X20	2	2	2	2			N	
	(A=*)	(B=*)	(C=*)	(D=*)							
8-2	1	26106-080202	BOLT M 8X 20 PLATED	2	2	2	2			N	
	(A=T/# 00909)	(B=T/# 02372)	(C=T/# 20991)	(D=T/# 42957)							
9	1	22217-080000	SPRING WASHER 8	2	2	2	2			Z	
	(A=*)	(B=*)	(C=*)	(D=*)							
10	1	194150-01270	SPACER 20	1	1	1	1				
11	1	194275-01352	LEVER, THROTTLE LINK	1	1	1	1				
12	1	22157-100000	WASHER 10	1	1	1	1				
13	1	194740-00160	WASHER 10, CONICAL	2	2	2	2				
14	1	26716-100002	NUT M10	2	2	2	2				
15	1	22137-100000	WASHER 10,POLISHED	1	1	1	1				
16	1	194446-01320	ROD, THROTTLE LINK	1	1	1	1				
17	1	22137-080000	WASHER 8, POLISHED	2	2	2	2				
18	1	22417-160180	COTTER PIN 1.6X18	2	2	2	2				
19	1	194150-01370	ADJUSTER	1	1	1	1				
20	1	26716-080002	NUT M 8	2	2	2	2				
21	1	194446-01440-U	ROD, THROTTLE LINK	1	1	1	1				
22	1	22137-060000	WASHER 6, POLISHED	2	2	2	2				
23	1	22417-160180	COTTER PIN 1.6X18	2	2	2	2				
24	1	194750-04400	SPRING, RETURN	1	1	1	1				
25	1	194440-01511	ROD, DECOMPRESSION	1	1	1	1				
26	1	23418-060000	GASKET 6, NYLON	1	1	1	1				
27	1	22417-160180	COTTER PIN 1.6X18	1	1	1	1				
28	1	194440-01550	GROMMET	1	1	1	1				
29	1	194448-01500	CABLE ASSY, STOP.	1	1	1	1				
30	1	26116-050142	BOLT M 5X 14 PLATED	1	1	1	1				
31	1	26756-050002	LOCK NUT M 5 PLATED	1	1	1	1				

N:Old $\frac{\text{Yes}}{\text{No}}$ New, Q:Old $\frac{\text{No}}{\text{Yes}}$ New, R:Old $\frac{\text{Yes}}{\text{Yes}}$ New, S:Old $\frac{\text{No}}{\text{No}}$ New, W:Add, Z:Discontinued, F:Interchangeable by set, K:Q'ty Change

(C)Copy Rights YANMAR CO.,LTD.

Fig.25. FUEL TANK

Fig. 25 FUEL TANK

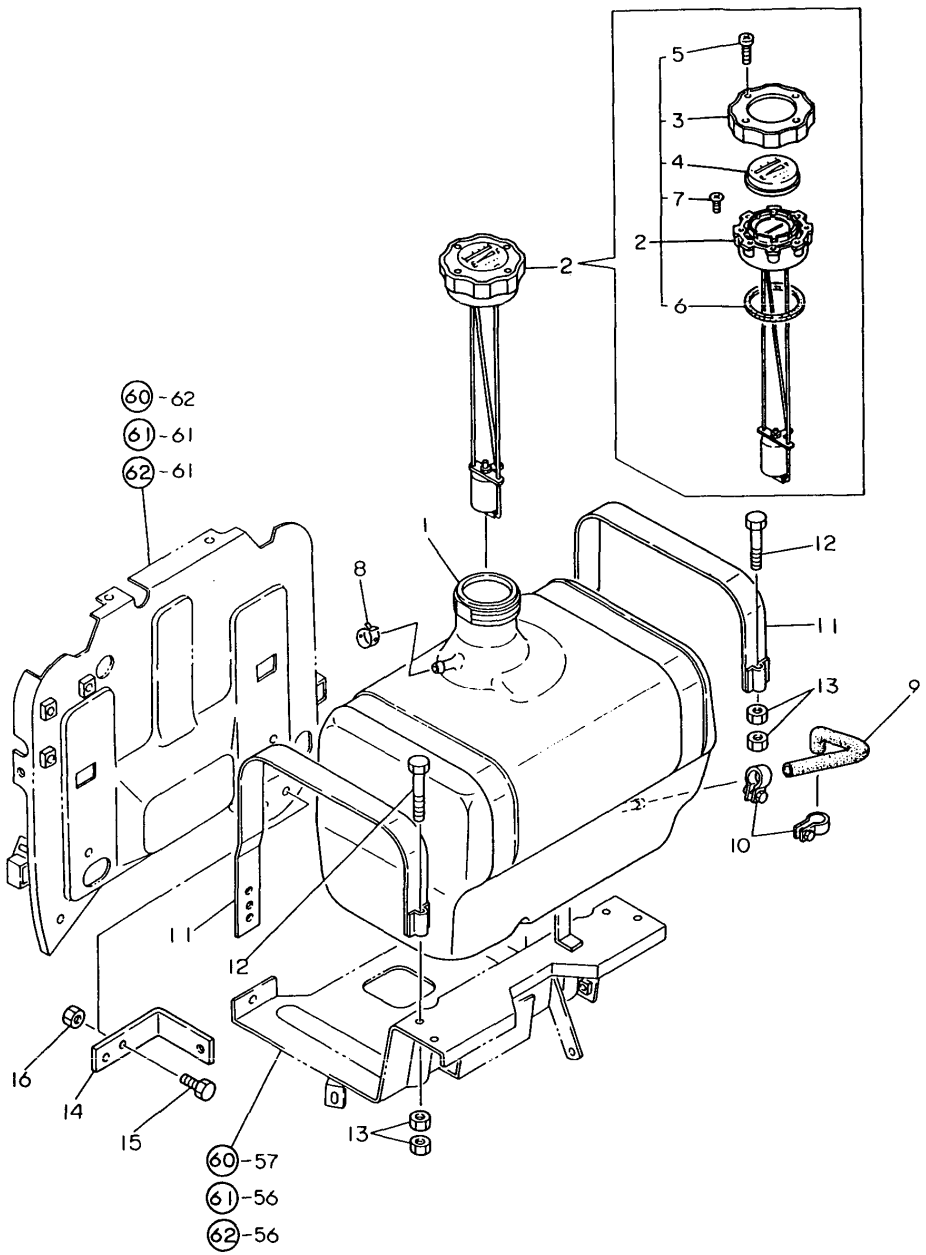

25. FUEL TANK

(A)=YM186 (FLOOR (D)=YM186D(COLUM
(B)=YM186D(FLOOR (E)=
(C)=YM186 (COLUM (F)=

REF.	LEV.	PARTS NO.	DESCRIPTION	Q'TY (A)	(B)	(C)	(D)	(E)	(F)	I	R
1	1	194446-04110	TANK (17L), FUEL	1	1						
1-1	1	194446-04111	TANK (17L), FUEL	1	1	1	1			N	
	(A=T/# 00504)	(B=T/# 01191)									
1-2	1	194446-04112	TANK (17L), FUEL	1	1	1	1			N	
	(A=*1982.10)	(B=*1982.10)	(C=*1982.10) (D=*1982.10)								
2	1	194145-04301	CAP W/GAUGE, F. TANK	1	1						
2-1	1	194145-04302	CAP W/GAUGE, F. TANK	1	1	1	1			N	
	(A=T/# 00446)	(B=T/# 01073)									
3	2	194145-04310	CAP, FUEL TANK	1	1						
3-1	2	194145-04311	CAP, FUEL TANK	1	1	1	1			N	
	(A=T/# 00446)	(B=T/# 01073)									
4	2	194145-04350	LENS	1	1						
4-1	2	194145-04351	LENS	1	1	1	1			N	
	(A=T/# 00446)	(B=T/# 01073)									
5	2	194145-04460	SCREW 4X12	4	4	4	4				
6	2	194145-04520	GASKET	1	1						
6-1	2	194145-04521	GASKET	1	1	1	1			N	
	(A=T/# 00446)	(B=T/# 01073)									
7	2	194145-04530	SCREW M3X 6	2	2						
7-1	2	26557-030062	SCREW M 3X 6	2	2	2	2			N	
	(A=T/# 00446)	(B=T/# 01073)									
8	1	124060-77680	CLAMP 10	1	1	1	1				
9	1	194446-04720	PIPE, FUEL OIL	1	1	1	1				
10	1	124766-59050	CLAMP 12	2	2	2	2				
10-1	1	23080-012000	CLAMP 12	2	2	2	2			N	
	(A=T/# 00856)	(B=T/# 02152)	(C=T/# 20958) (D=T/# 42834)								
11	1	194310-04250	BAND, FUEL TANK	2	2	2	2				
12	1	26116-080402	BOLT M 8X 40 PLATED	2	2	2	2				
12-1	1	26116-080502	BOLT M 8X 50 PLATED	2	2	2	2			N	
	(A=*)	(B=*)	(C=T/# 20101) (D=T/# 40138)								
13	1	26716-080002	NUT M 8	4	4	4	4				
14	1	194446-04710-X	BRACKET	1	1	1	1				
14-1	1	194500-04710-X	BRACKET	1	1	1	1			N	
	(A=*1980.12)	(B=*1980.12)	(C=*1980.12) (D=*1980.12)								
15-1	1	26116-060122	BOLT M 6X 12	1	1	1	1				
15-2	1	26106-060122	BOLT M 6X 12 PLATED	1	1	1	1			N	
	(A=T/# 00898)	(B=T/# 02355)	(C=T/# 20991) (D=T/# 42957)								
16	1	194990-22040	NUT W/WASHER 6	1	1	1	1				

N:Old $\frac{\text{Yes}}{\text{No}}$ New, Q:Old $\frac{\text{No}}{\text{Yes}}$ New, R:Old $\frac{\text{Yes}}{\text{Yes}}$ New, S:Old $\frac{\text{No}}{\text{No}}$ New, W:Add, Z:Discontinued, F:Interchangeable by set, K:Q'ty Change

(C)Copy Rights YANMAR CO.,LTD.

Fig.26. FRONT AXLE BRACKET (U.S.A.)

Fig. 26 FRONT AXLE BRACKET (U.S.A.)

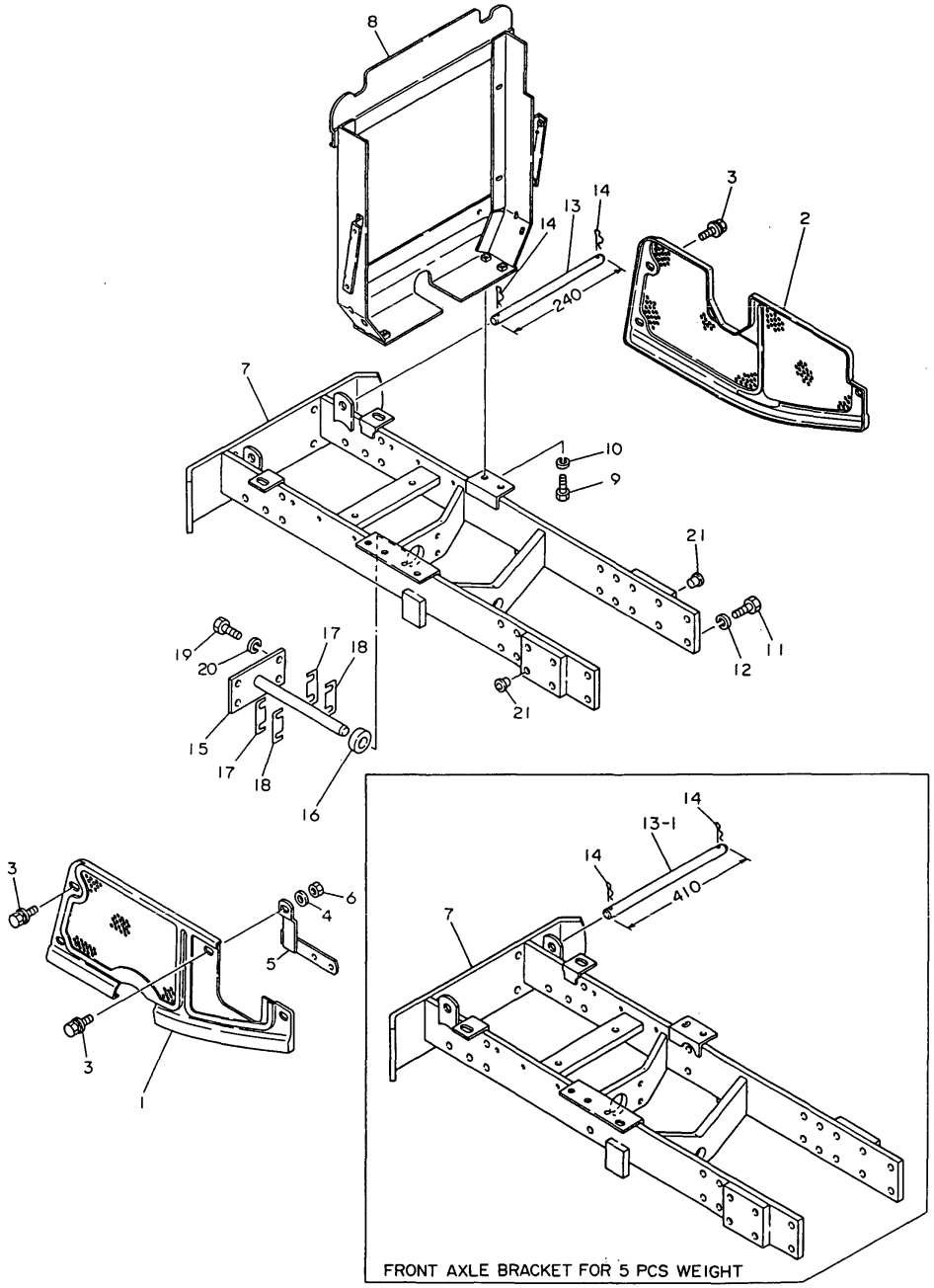

0CT10-G22801

26. FRONT AXLE BRACKET (U.S.A.)

(A)=YM186 (FLOOR (D)=YM186D(COLUM
(B)=YM186D(FLOOR (E)=
(C)=YM186 (COLUM (F)=

REF.	LEV.	PARTS NO.	DESCRIPTION	Q'TY (A)	(B)	(C)	(D)	(E)	(F)	I	R
1	1	194446-05110-R	COVER, BELT	1	1	1	1				
2	1	194446-05120-R	COVER, BELT	1	1	1	1				
2-1	1	194446-05121-R	COVER, BELT	1	1	1	1			N	
	(A=*1980.)	(B=*1980.)	(C=*1980.) (D=*1980.)								
3	1	194420-05210	BOLT M 6X 16	7	7	7	7				
4	1	22157-060000	WASHER 6	1	1	1	1				
5	1	194446-05220	STAY	1	1	1	1				
6	1	26716-060002	NUT M 6	1	1	1	1				
7	1	194446-11110-X	BRACKET, FRONT AXLE	1	1	1	1				
7-1	1	194446-11111-X	BRACKET, FRONT AXLE	1	1	1	1			N	
	(A=T/# 00757)	(B=T/# 01755)	(C=T/# 20862) (D=T/# 42318)								
8	1	194446-11130-X	BRACKET, RADIATOR	1	1	1	1				
9	1	26116-080162	BOLT M 8X 16 PLATED	4	4	4	4				
9-1	1	26013-080162	BOLT W/WASHER M8X16	4	4	4	4			N	
	(A=*)	(B=*)	(C=*) (D=*)								
9-2	1	26106-080162	BOLT M 8X 16 PLATED	4	4	4	4			N	
	(A=T/# 00909)	(B=T/# 02372)	(C=T/# 20991) (D=T/# 42957)								
10	1	22217-080000	SPRING WASHER 8	4	4	4	4			Z	
	(A=*)	(B=*)	(C=*) (D=*)								
11	1	26116-120302	BOLT M12X 30 PLATED	12	12	12	12				
11-1	1	26013-120302	BOLT W/WASHER M12X30	12	12	12	12			N	
	(A=*)	(B=*)	(C=*) (D=*)								
12	1	22217-120000	WASHER 12,SPRING	12	12	12	12			Z	
	(A=*)	(B=*)	(C=*) (D=*)								
13	1	194446-11140	PIN, LOCK	1	1						
13-1	1	194432-11140	PIN, LOCK	1	1	1	1			S	
	(A=T/# 00504)	(B=T/# 01199)									
14	1	22360-160000	SNAP PIN 16	2	2	2	2				
15	1	194191-13211-X	PIN, CENTER	1	1	1	1				
16	1	194191-13220	SPACER 22X42X14	1	1	1	1				
17	1	194191-13232	SHIM (T=0.5)	4	4	4	4				1
18	1	194191-13240	SHIM (T=0.25)	4	4	4	4				1
19	1	26116-120222	BOLT M12X 22 PLATED	4	4	4	4				
19-1	1	26013-120252	BOLT M12X 25	4	4	4	4			N	
	(A=*1982.12)	(B=*1982.12)	(C=*1982.12) (D=*1982.12)								
20	1	22212-120000	SPRING WASHER 12	4	4	4	4				
20-1	1	22217-120000	WASHER 12,SPRING	4	4	4	4			N	
	(A=*)	(B=*)	(C=*) (D=*)								
20-2	1	22217-120000	WASHER 12,SPRING	4	4	4	4			Z	
	(A=*1982.12)	(B=*1982.12)	(C=*1982.12) (D=*1982.12)								
21	1	194150-21910	PLUG 11.2	8	8	8	8				

N:Old $\frac{\text{Yes}}{\text{No}}$ New, Q:Old $\frac{\text{No}}{\text{Yes}}$ New, R:Old $\frac{\text{Yes}}{\text{Yes}}$ New, S:Old $\frac{\text{No}}{\text{No}}$ New, W:Add, Z:Discontinued, F:Interchangeable by set, K:Q'ty Change

(C)Copy Rights YANMAR CO.,LTD.

Fig.27. FRONT AXLE BRACKET (FRANCE)

Fig. 27 FRONT AXLE BRACKET (FRANCE)

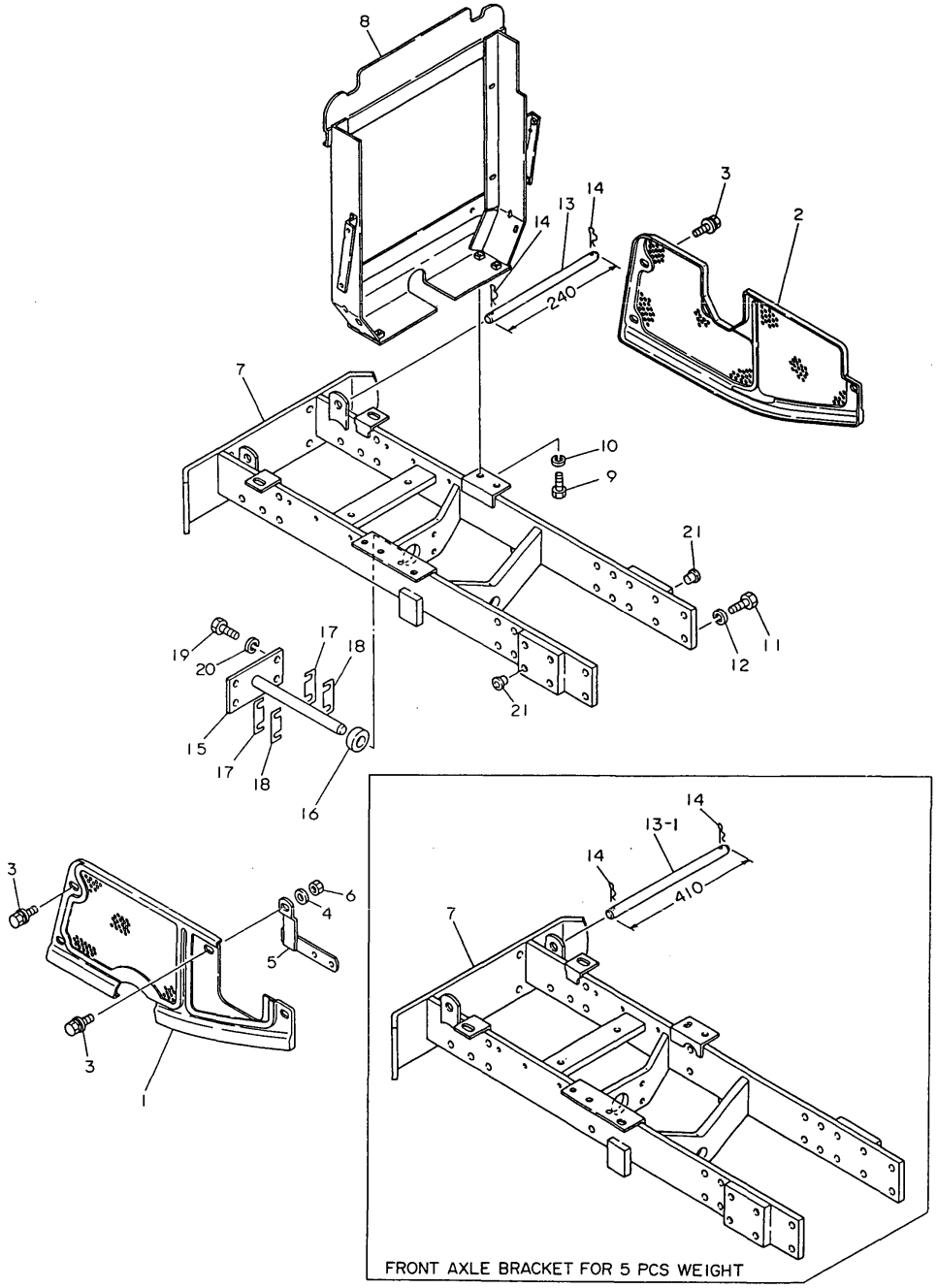

0CT10-G22801

27. FRONT AXLE BRACKET (FRANCE)

(A)=YM186 (FLOOR (D)=YM186D(COLUM
(B)=YM186D(FLOOR (E)=
(C)=YM186 (COLUM (F)=

REF.	LEV.	PARTS NO.	DESCRIPTION	Q'TY (A)	(B)	(C)	(D)	(E)	(F)	I	R
1	1	194446-05110-R	COVER, BELT	1	1	1	1				
2	1	194446-05120-R	COVER, BELT	1	1	1	1				
2-1	1	194446-05121-R	COVER, BELT	1	1	1	1			N	
	(A=*1980.)	(B=*1980.)	(C=*1980.) (D=*1980.)								
3	1	194420-05210	BOLT M 6X 16	7	7	7	7				
4	1	22157-060000	WASHER 6	1	1	1	1				
5	1	194446-05220	STAY	1	1	1	1				
6	1	26716-060002	NUT M 6	1	1	1	1				
7	1	194446-11110-X	BRACKET, FRONT AXLE	1	1	1	1				
7-1	1	194446-11111-X	BRACKET, FRONT AXLE	1	1	1	1			N	
	(A=T/# 00757)	(B=T/# 01755)	(C=T/# 20862) (D=T/# 42318)								
8	1	194446-11130-X	BRACKET, RADIATOR	1	1	1	1				
9	1	26116-080162	BOLT M 8X 16 PLATED	4	4	4	4				
9-1	1	26013-080162	BOLT W/WASHER M8X16	4	4	4	4			N	
	(A=*)	(B=*)	(C=*) (D=*)								
9-2	1	26106-080162	BOLT M 8X 16 PLATED	4	4	4	4			N	
	(A=T/# 00909)	(B=T/# 02372)	(C=T/# 20991) (D=T/# 42957)								
10	1	22217-080000	SPRING WASHER 8	4	4	4	4			Z	
	(A=*)	(B=*)	(C=*) (D=*)								
11	1	26116-120302	BOLT M12X 30 PLATED	12	12	12	12				
11-1	1	26013-120302	BOLT W/WASHER M12X30	12	12	12	12			N	
	(A=*)	(B=*)	(C=*) (D=*)								
12	1	22217-120000	WASHER 12,SPRING	12	12	12	12			Z	
	(A=*)	(B=*)	(C=*) (D=*)								
13	1	194446-11140	PIN, LOCK	1	1	1	1				
13-1	1	194432-11140	PIN, LOCK	1	1	1	1			S	
	(A=T/# 00504)	(B=T/# 01199)	(C=*1980.) (D=*1980.)								
14	1	22360-160000	SNAP PIN 16	2	2	2	2				
15	1	194191-13211-X	PIN, CENTER	1	1	1	1				
16	1	194191-13220	SPACER 22X42X14	1	1	1	1				
17	1	194191-13232	SHIM (T=0.5)	4	4	4	4				1
18	1	194191-13240	SHIM (T=0.25)	4	4	4	4				1
19	1	26116-120222	BOLT M12X 22 PLATED	4	4	4	4				
19-1	1	26013-120252	BOLT M12X 25	4	4	4	4			N	
	(A=*1982.12)	(B=*1982.12)	(C=*1982.12) (D=*1982.12)								
20	1	22212-120000	SPRING WASHER 12	4	4	4	4				
20-1	1	22217-120000	WASHER 12,SPRING	4	4	4	4			N	
	(A=*)	(B=*)	(C=*) (D=*)								
20-2	1	22217-120000	WASHER 12,SPRING	4	4	4	4			Z	
	(A=*1982.12)	(B=*1982.12)	(C=*1982.12) (D=*1982.12)								
21	1	194150-21910	PLUG 11.2	8	8	8	8				

N:Old $\xleftarrow[\text{No}]{\text{Yes}}$ New, Q:Old $\xleftarrow[\text{Yes}]{\text{No}}$ New, R:Old $\xleftarrow[\text{Yes}]{\text{Yes}}$ New, S:Old $\xleftarrow[\text{No}]{\text{No}}$ New, W:Add, Z:Discontinued, F:Interchangeable by set, K:Q'ty Change

(C)Copy Rights YANMAR CO.,LTD.

Fig.28. FRONT AXLE BRACKET (ENGLAND)

Fig. 28 FRONT AXLE BRACKET (ENGLAND)

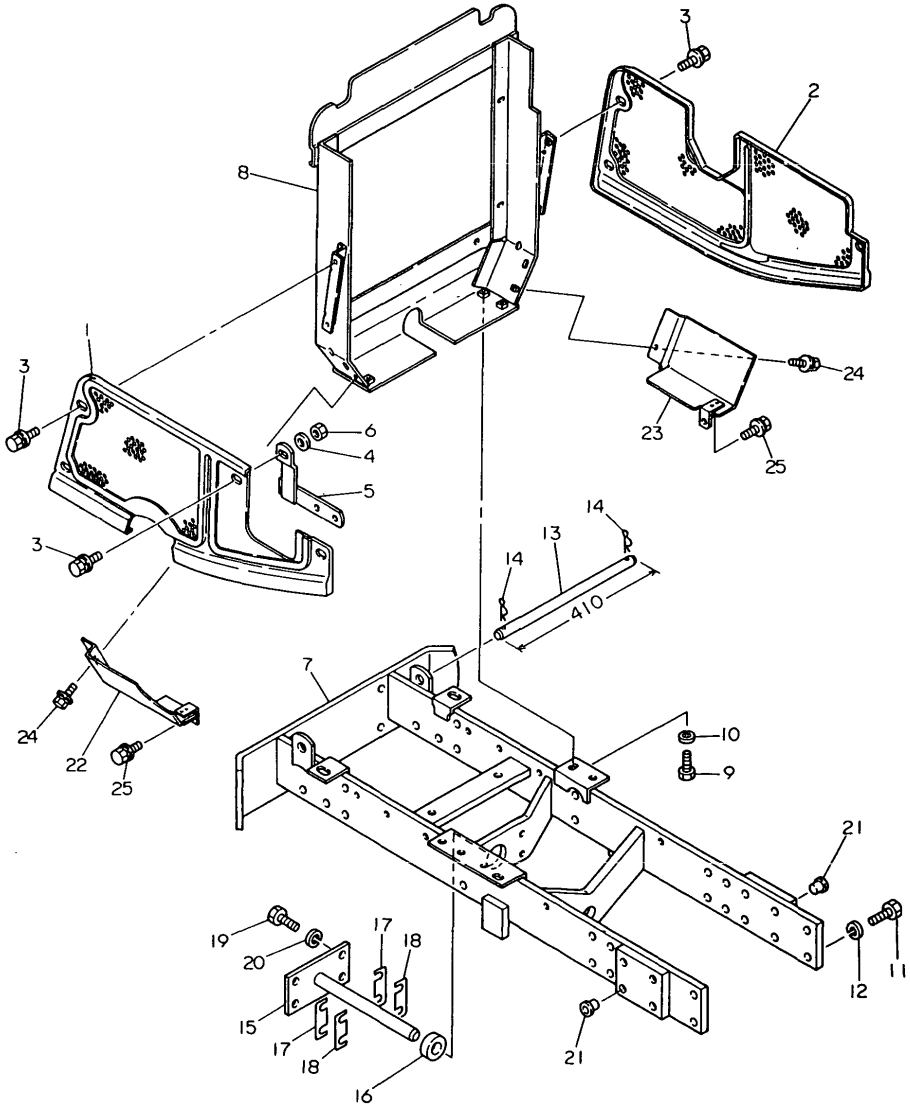

0CT10-G22801

28. FRONT AXLE BRACKET (ENGLAND)

(A)=YM186 (FLOOR (D)=YM186D(COLUM
(B)=YM186D(FLOOR (E)=
(C)=YM186 (COLUM (F)=

REF.	LEV.	PARTS NO.	DESCRIPTION	Q'TY (A)	(B)	(C)	(D)	(E)	(F)	I	R
1	1	194446-05110-R	COVER, BELT	1	1	1	1				
1-1	1	194436-05110	COVER, BELT	1	1	1	1			N	
	(A=T/# 00760)	(B=T/# 01756)	(C=T/# 20920)	(D=T/# 42408)							
2	1	194446-05121-R	COVER, BELT	1	1	1	1				
3	1	194420-05210	BOLT M 6X 16	7	7	7	7				
4	1	22157-060000	WASHER 6	1	1	1	1				
5	1	194446-05220	STAY	1	1	1	1				
6	1	26716-060002	NUT M 6	1	1	1	1				
7	1	194446-11110-X	BRACKET, FRONT AXLE	1	1	1	1				
7-1	1	194446-11111-X	BRACKET, FRONT AXLE	1	1	1	1			N	
	(A=T/# 00757)	(B=T/# 01755)	(C=T/# 20862)	(D=T/# 42318)							
8	1	194446-11130-X	BRACKET, RADIATOR	1	1	1	1				
9	1	26116-080162	BOLT M 8X 16 PLATED	4	4	4	4				
9-1	1	26013-080162	BOLT W/WASHER M8X16	4	4	4	4			N	
	(A=*)	(B=*)	(C=*)	(D=*)							
9-2	1	26106-080162	BOLT M 8X 16 PLATED	4	4	4	4			N	
	(A=T/# 00909)	(B=T/# 02372)	(C=T/# 20991)	(D=T/# 42957)							
10	1	22217-080000	SPRING WASHER 8	4	4	4	4			Z	
	(A=*)	(B=*)	(C=*)	(D=*)							
11	1	26116-120302	BOLT M12X 30 PLATED	12	12	12	12				
11-1	1	26013-120302	BOLT W/WASHER M12X30	12	12	12	12			N	
	(A=*)	(B=*)	(C=*)	(D=*)							
12	1	22217-120000	WASHER 12,SPRING	12	12	12	12			Z	
	(A=*)	(B=*)	(C=*)	(D=*)							
13	1	194432-11140	PIN, LOCK	1	1	1	1				
14	1	22360-160000	SNAP PIN 16	2	2	2	2				
15	1	194191-13211-X	PIN, CENTER	1	1	1	1				
16	1	194191-13220	SPACER 22X42X14	1	1	1	1				
17	1	194191-13232	SHIM (T=0.5)	4	4	4	4				1
18	1	194191-13240	SHIM (T=0.25)	4	4	4	4				1
19	1	26116-120222	BOLT M12X 22 PLATED	4	4	4	4				
19-1	1	26013-120252	BOLT M12X 25	4	4	4	4			N	
	(A=*1982.12)	(B=*1982.12)	(C=*1982.12)	(D=*1982.12)							
20	1	22217-120000	WASHER 12,SPRING	4	4	4	4			Z	
	(A=*1982.12)	(B=*1982.12)	(C=*1982.12)	(D=*1982.12)							
21	1	194150-21910	PLUG 11.2	8	8	8	8				
22	1	194448-05130	COVER (L), SAFETY	1	1	1	1				
23	1	194448-05140	STAY	1	1	1	1				
24	1	26014-060142	BOLT M 6X 14	2	2	2	2				
24-1	1	194155-05210	BOLT W/WASHER M6X16	2	2	2	2			N	
	(A=*1982.12)	(B=*1982.12)	(C=*1982.12)	(D=*1982.12)							
25	1	26013-080162	BOLT W/WASHER M8X16	2	2	2	2				

N:Old $\overset{\text{Yes}}{\underset{\text{No}}{\leftrightarrow}}$ New, Q:Old $\overset{\text{No}}{\underset{\text{Yes}}{\leftrightarrow}}$ New, R:Old $\overset{\text{Yes}}{\underset{\text{Yes}}{\leftrightarrow}}$ New, S:Old $\overset{\text{No}}{\underset{\text{No}}{\leftrightarrow}}$ New, W:Add, Z:Discontinued, F:Interchangeable by set, K:Q'ty Change

(C)Copy Rights YANMAR CO.,LTD.

Fig.29. FRONT AXLE (FOR YM186)

Fig. 29 FRONT AXLE [For Model YM186]

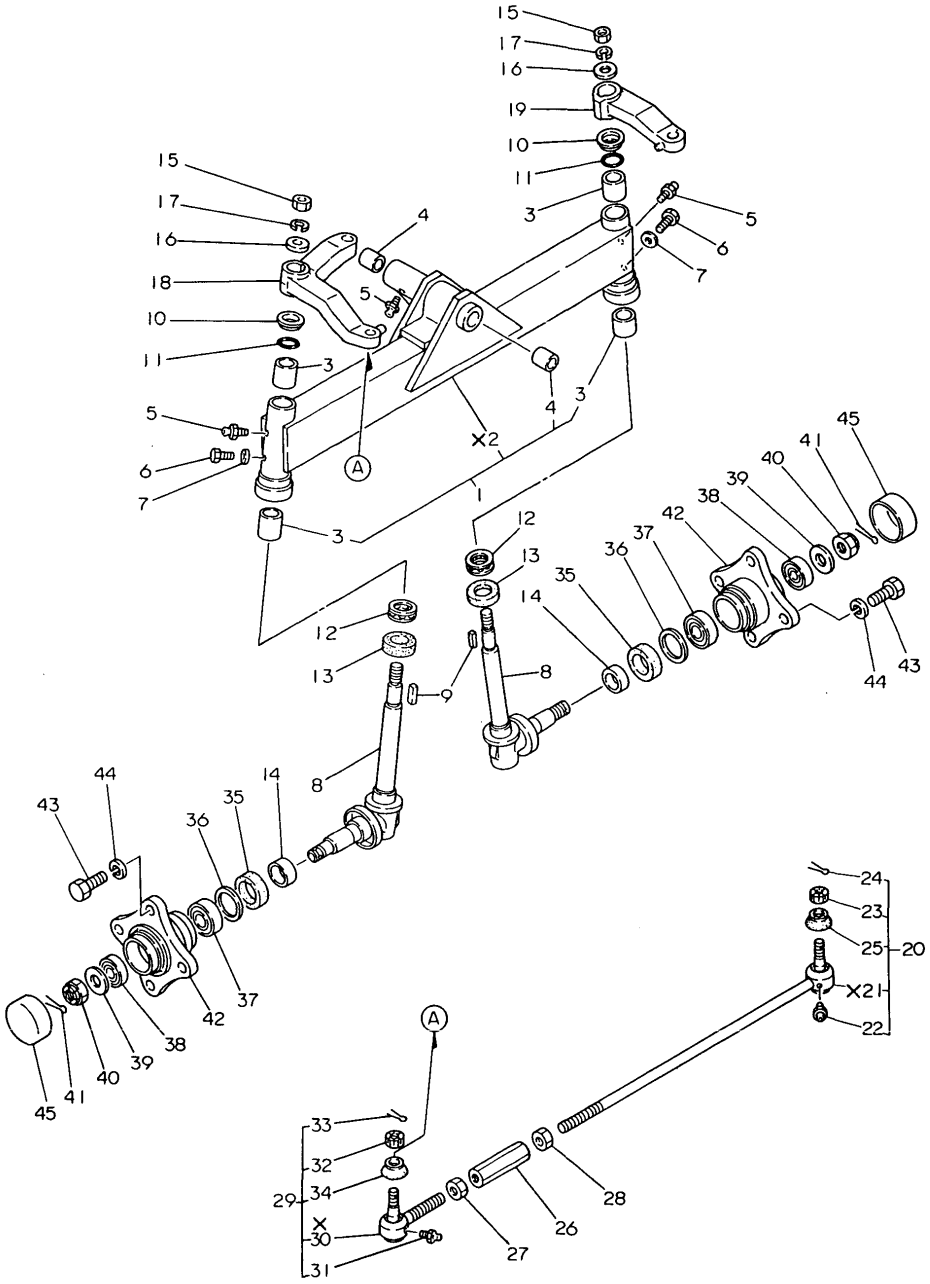

29. FRONT AXLE (FOR YM186)

(A)=YM186 (FLOOR (D)=YM186D(COLUM
(B)=YM186D(FLOOR (E)=
(C)=YM186 (COLUM (F)=

REF.	LEV.	PARTS NO.	DESCRIPTION	Q'TY (A)	(B)	(C)	(D)	(E)	(F)	I	R
1	1	194446-11200-X	AXLE ASSY, FRONT	1		1					
3	2	194440-11360	BUSH 25X29X30	4		4					
4	2	194420-11520	BUSH 22X25X25	2		2					
5	1	194151-11480	GREASE NIPPLE A	3		3					
5-1	1	24761-060000	NIPPLE MT6X1, GREASE	3		3				N	
	(A=*1982.06)		(C=*1982.06)								
6	1	194145-11350	BOLT M 6X 5	2		2					
7	1	22117-060000	WASHER 6	2		2					
8	1	194446-11800-X	PIN ASSY, KING	2		2					
9	1	194151-11660	KEY 7X26	2		2					
10	1	194151-11840	COVER, KINGPIN	2		2					
11	1	194151-11860	O-RING 1A-2025	2		2					
12	1	194740-50110	THRUST BEARING	2		2					
12-1	1	24520-511050	BEARING(51105	2		2				R	
	(A=T/# 00730)		(C=T/# 20858)								
13	1	194440-11870	SEAL TCX6 35 48 10	2		2					
14	1	194420-11880	SLEEVE 35X39X15	2		2					
15	1	194151-11640	NUT 18	2		2					
16	1	194151-11650	WASHER 18X36X2.3	2		2					
17	1	22217-180000	SPRING WASHER 18	2		2					
18	1	194440-12111-X	ARM, KNUCKLE	1		1					
19	1	194440-12211-X	ARM (R), KNUCKLE	1		1					
20	1	794150-12301	TIE-ROD ASSY	1		1					
20-1	1	194150-12300	TIE-ROD ASSY	1		1				N	
	(A=T/# 00851)		(C=T/# 20958)								
22	2	194730-57411	GREASE NIPPLE A	1		1					
22-1	2	24761-060000	NIPPLE MT6X1, GREASE	1		1				N	
	(A=T/# 00851)		(C=T/# 20958)								
23	2	194730-57241	NUT M12	1		1					
24	2	22417-300250	COTTER PIN 3.0X 25	1		1					
25	2	194730-57220	COVER, DUST	1		1					
26	1	194150-12410	TURNBUCKLE M17X95	1		1					
27	1	194990-22830	NUT M17	1		1					
28	1	194990-22840	NUT M17	1		1					
29	1	794730-57112	END ASSY, TIE-ROD	1		1					
29-1	1	194730-57110	END ASSY, TIE-ROD	1		1				N	
	(A=T/# 00851)		(C=T/# 20958)								
31	2	194730-57411	GREASE NIPPLE A	1		1					
31-1	2	24761-060000	NIPPLE MT6X1, GREASE	1		1				N	
	(A=T/# 00851)		(C=T/# 20958)								
32	2	194730-57241	NUT M12	1		1					
33	2	22417-300250	COTTER PIN 3.0X 25	1		1					
34	2	194730-57220	COVER, DUST	1		1					
35	1	194420-12720	SEAL TC6Y395211.5OIL	2		2					
36	1	194151-11670	WASHER 42X51.8X1	2		3					
37	1	24101-062054	BEARING #6205	2		2					
38	1	24101-062044	BALL BEARING	2		2					
39	1	194420-12640	WASHER 20X44X3.2	2		2					
40	1	26837-200002	CASTLE NUT M20	2		2					
40-1	1	26877-200002	CASTLE NUT M20	2		2				N	
	(A=*)		(C=*)								

N:Old $\xleftarrow[\text{No}]{\text{Yes}}$ New, Q:Old $\xleftarrow[\text{Yes}]{\text{No}}$ New, R:Old $\xleftarrow[\text{Yes}]{\text{Yes}}$ New, S:Old $\xleftarrow[\text{No}]{\text{No}}$ New, W:Add, Z:Discontinued, F:Interchangeable by set, K:Q'ty Change

++ CONTINUE ++

(C)Copy Rights YANMAR CO.,LTD.

Fig.29. FRONT AXLE (FOR YM186)

Fig. 29 FRONT AXLE [For Model YM186]

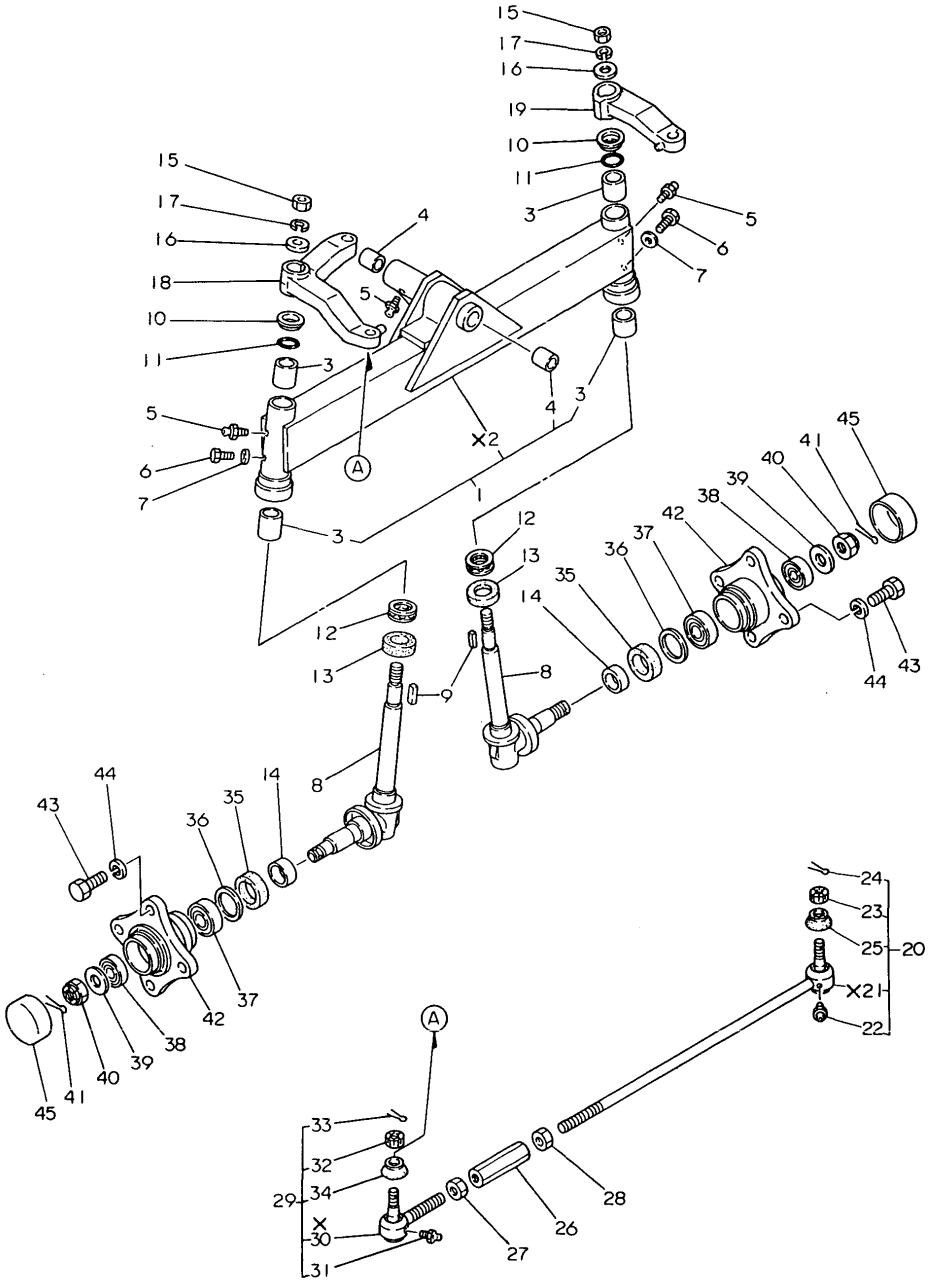

0CT10-G22801 29. FRONT AXLE (FOR YM186)

(A)=YM186 (FLOOR (D)=YM186D(COLUM
(B)=YM186D(FLOOR (E)=
(C)=YM186 (COLUM (F)=

REF.	LEV.	PARTS NO.	DESCRIPTION	Q'TY (A)	(B)	(C)	(D)	(E)	(F)	I	R
41	1	22417-400400	COTTER PIN 4.0X40	2		2					
42	1	194151-12610-X	HUB, FRONT WHEEL	2		2					
43	1	26116-140252	BOLT M14X 25 PLATED	8		8					
43-1	1	194180-12650	BOLT M14X 25	8		8				N	
	(A=*1982.)		(C=*1982.)								
43-2	1	194278-12650	BOLT W/WASHER M14X25	8		8				N	
	(A=T/# 00860)		(C=T/# 20967)								
44	1	22217-140000	SPRING WASHER 14	8		8				Z	
	(A=T/# 00860)		(C=T/# 20967)								
45	1	194151-12620	COVER, HUB	2		2					

N:Old $\frac{\text{Yes}}{\text{No}}$ New, Q:Old $\frac{\text{No}}{\text{Yes}}$ New, R:Old $\frac{\text{Yes}}{\text{Yes}}$ New, S:Old $\frac{\text{No}}{\text{No}}$ New, W:Add, Z:Discontinued, F:Interchangeable by set, K:Q'ty Change

(C)Copy Rights YANMAR CO.,LTD.

Fig.30. CASING OF FRONT AXLE (YM186D)

Fig. 30 CASING OF FRONT AXLE [For Model YM186D]

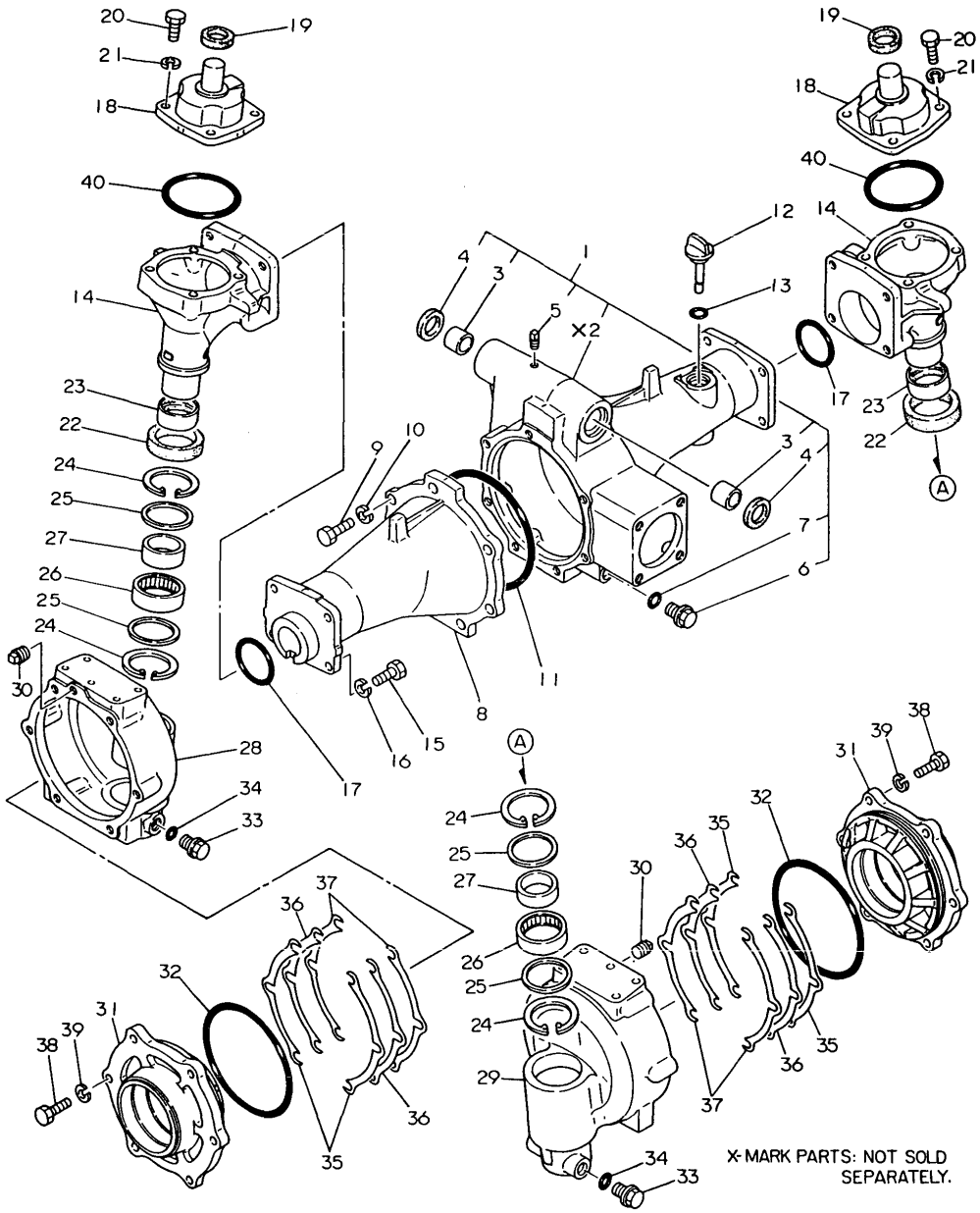

30. CASING OF FRONT AXLE (YM186D)

(A)=YM186 (FLOOR (D)=YM186D(COLUM
(B)=YM186D(FLOOR (E)=
(C)=YM186 (COLUM (F)=

REF.	LEV.	PARTS NO.	DESCRIPTION	Q'TY (A)	(B)	(C)	(D)	(E)	(F)	I	R
1	1	194447-13600-X	HOUSING ASSY, AXLE		1		1				
3	2	194190-11520	BUSH 25X25		2		2				
4	2	194191-13420	SEAL SC22 32 7, OIL		2		2				
5	2	194151-36670	PLUG PT02		1					Z	
		(B=T/# 00749)									
6	2	194151-24770	PLUG 14, OIL		1		1				
6-1	2	23491-140002	PLUG 14		1		1			N	
		(B=T/# 02189)	(D=T/# 42882)								
7	2	24311-000160	O-RING 1A P-16.0		1		1				
8	1	194447-13620-X	HOUSING, FRONT AXLE		1		1				
9	1	26116-100302	BOLT M10X 30 PLATED		7		7				
10	1	22217-100000	SPRING WASHER 10		7		7				
11	1	24321-001400	O-RING 1A G-140.0		1		1				
12	1	194447-13490	CAP W/DIPSTICK		1		1				
13	1	24311-000180	O-RING 1A P-18.0		1		1				
14	1	194447-13710-X	CASE, SIDE GEAR		2		2				
15	1	26116-100302	BOLT M10X 30 PLATED		8						
15-1	1	194274-13550	BOLT M10X 30		8		8			S	1
		(B=T/# 01043)									
16	1	22217-100000	SPRING WASHER 10		8						
16-1	1	194274-13570	SPRING WASHER 10		8		8			S	1
		(B=T/# 01043)									
17	1	24321-000500	O-RING 1A G-50.0		2		2				
18	1	194447-13720-X	COVER, GEAR CASE		2		2				
18-1	1	194447-13721-X	COVER, GEAR CASE		2		2			S	3
		(B=T/# 01241)	(D=T/# 40328)								
18-2	1	194447-13722-X	COVER, GEAR CASE		2		2			S	4
		(B=T/# 01965)	(D=T/# 42656)								
19	1	194447-13730	SEAL VB25 35 50, OIL		2		2				
19-1	1	194321-11940	SEAL VB 354105, OIL		2		2			S	3
		(B=T/# 01241)	(D=T/# 40328)								
20	1	26116-080202	BOLT M 8X 20 PLATED		8						
20-1	1	194421-13640	BOLT M 8X22		8		8			S	2
		(B=T/# 01043)									
21	1	22217-080000	SPRING WASHER 8		8						
21-1	1	194421-13650	SPRING WASHER 8		8		8			S	2
		(B=T/# 01043)									
22	1	194447-13650	SEAL TC6Y445711.5		2		2				
23	1	194447-13640	SLEEVE SI404415		2		2				
24	1	22262-000520	CIRCLIP R-52		4		4				
25	1	194447-13680	WASHER 42X52X1.6		4		4				
26	1	194447-13660	NEEDLE BEARING		2		2				
27	1	194447-13670	RACE 404517, INNER		2		2				
28	1	194447-13740-X	BOX, FRONT GEAR		1		1				
29	1	194447-13750-X	BOX, FRONT GEAR		1		1				
30	1	194151-36670	PLUG PT02		2		2				
31	1	194447-14130	CASE, FRONT BEARING		2						
31-1	1	194447-14131	CASE, FRONT BEARING		2		2			N	
		(B=T/# 00293)									
31-2	1	194198-14130	CASE, FRONT BEARING		2		2			N	
		(B=*)	(D=*)								

N:Old $\overset{\text{Yes}}{\underset{\text{No}}{\leftrightarrow}}$ New, Q:Old $\overset{\text{No}}{\underset{\text{Yes}}{\leftrightarrow}}$ New, R:Old $\overset{\text{Yes}}{\underset{\text{Yes}}{\leftrightarrow}}$ New, S:Old $\overset{\text{No}}{\underset{\text{No}}{\leftrightarrow}}$ New, W:Add, Z:Discontinued, F:Interchangeable by set, K:Q'ty Change

++ CONTINUE ++

(C)Copy Rights YANMAR CO.,LTD.

Fig.30. CASING OF FRONT AXLE (YM186D)

Fig. 30 CASING OF FRONT AXLE [For Model YM186D]

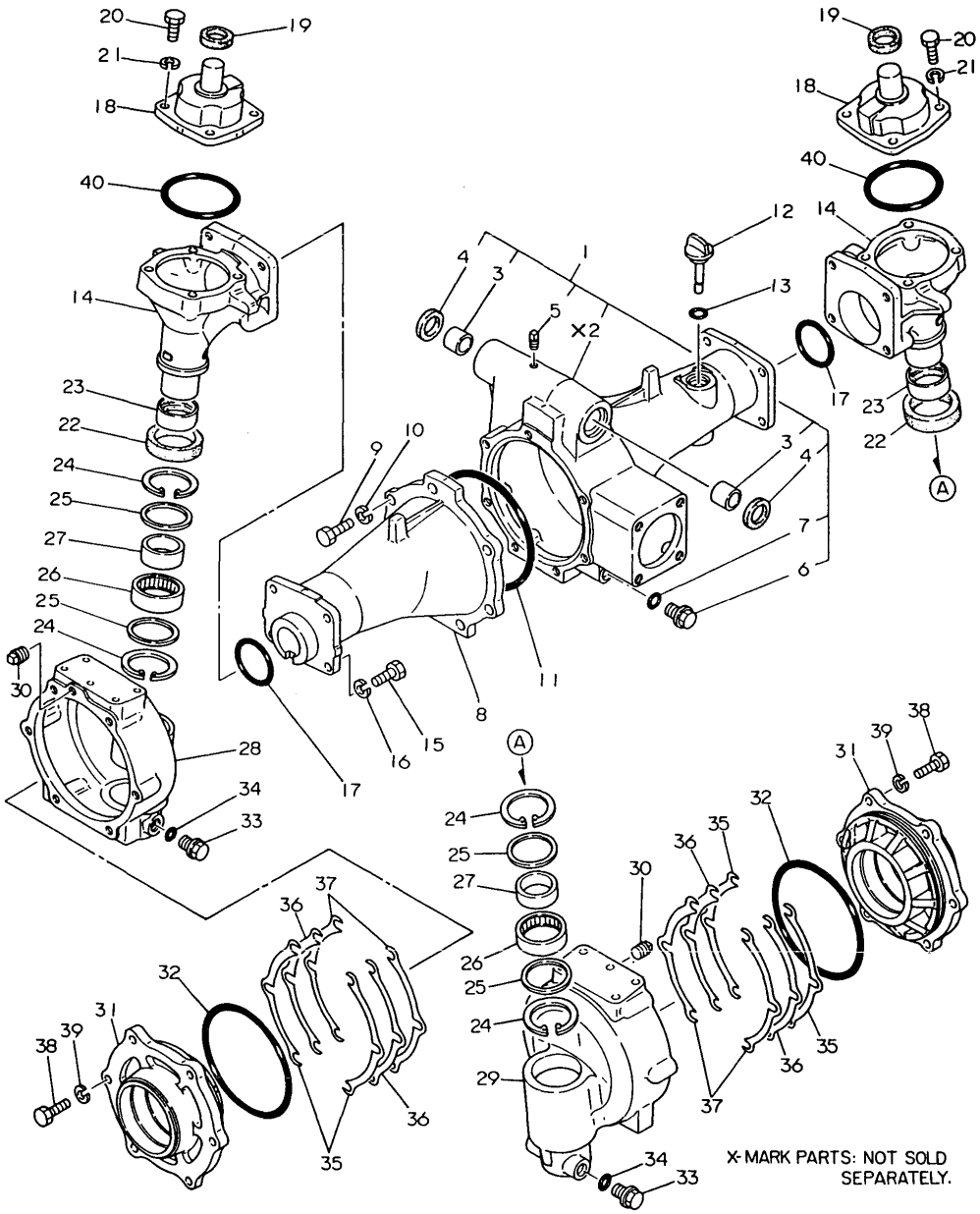

30. CASING OF FRONT AXLE (YM186D)

(A)=YM186 (FLOOR (D)=YM186D(COLUM
(B)=YM186D(FLOOR (E)=
(C)=YM186 (COLUM (F)=

REF.	LEV.	PARTS NO.	DESCRIPTION	Q'TY (A)	(B)	(C)	(D)	(E)	(F)	I	R
32	1	24321-001350	O-RING 1A G-135.0		2		2				
33	1	194151-24770	PLUG 14, OIL		2		2				
33-1	1	23491-140002	PLUG 14		2		2			N	
		(B=T/# 02189)	(D=T/# 42861)								
34	1	24311-000160	O-RING 1A P-16.0		2		2				
38	1	26116-100302	BOLT M10X 30 PLATED		12		12				
39	1	22217-100000	SPRING WASHER 10		12		12				
40	1	24341-000800	O-RING 1A S-80.0		2		2				
40-1	1	24321-000750	O-RING 1A G-75.0		2		2			S	4
		(B=T/# 01965)	(D=T/# 42656)								

N:Old $\xleftarrow[\text{No}]{\text{Yes}}$ New, Q:Old $\xleftarrow[\text{Yes}]{\text{No}}$ New, R:Old $\xleftarrow[\text{Yes}]{\text{Yes}}$ New, S:Old $\xleftarrow[\text{No}]{\text{No}}$ New, W:Add, Z:Discontinued, F:Interchangeable by set, K:Q'ty Change

(C)Copy Rights YANMAR CO.,LTD.

Fig.31. PROPELLER SHAFT & F. AXLE GEAR

Fig. 31 PROPELLER SHAFT & GEARS OF FRONT AXLE [For Model YM186D]

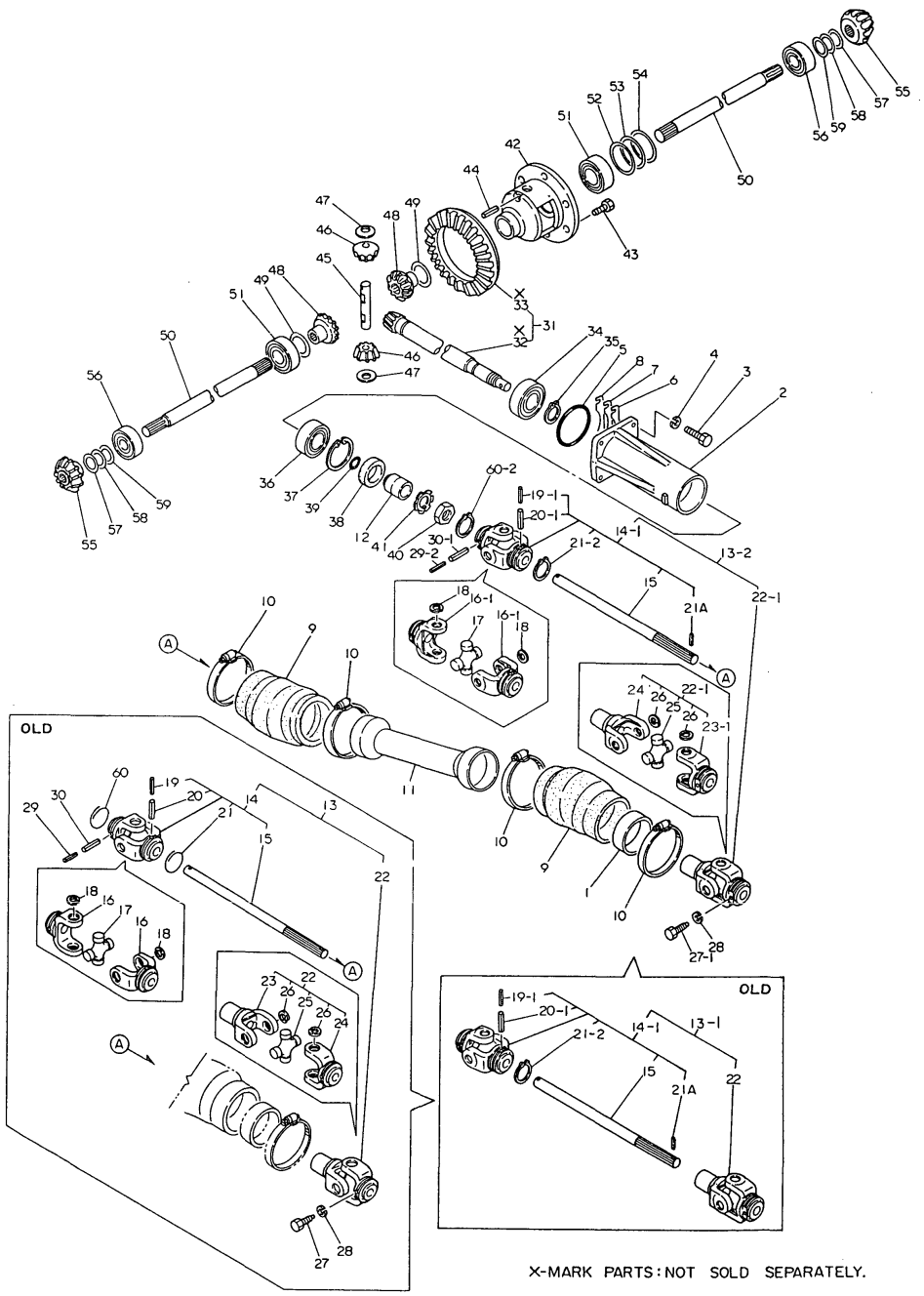

X-MARK PARTS : NOT SOLD SEPARATELY.

0CT10-G22801

31. PROPELLER SHAFT & F. AXLE GEAR

(A)=YM186 (FLOOR (D)=YM186D(COLUM
(B)=YM186D(FLOOR (E)=
(C)=YM186 (COLUM (F)=

REF.	LEV.	PARTS NO.	DESCRIPTION	Q'TY (A)	(B)	(C)	(D)	(E)	(F)	I	R
1	1	194441-14660	COLLAR		1		1				
2	1	194447-13450-X	RETAINER		1		1				
3	1	26116-080252	BOLT M 8X 25 PLATED		4		4				
4	1	22217-080000	SPRING WASHER 8		4		4				
5	1	24341-000560	O-RING 1A S-56.0		1		1				
6	1	194447-13460	SHIM T=0.1		4		4				1
7	1	194447-13470	SHIM T=0.3		2		2				1
8	1	194447-13480	SHIM T=0.5		2		2				1
9	1	194441-14650	BOOT, RUBBER		2		2				
10	1	194441-14670	CLAMP		4		4				
11	1	194441-14610-X	COVER, FRONT SHAFT		1		1				
12	1	194441-13130	COLLAR 20X30X32		1		1				
13	1	194441-13301	SHAFT ASSY,PROPELLER		1		1				
13-1	1	194441-13302	SHAFT ASSY,PROPELLER		1		1			S	
		(B=T/# 01205)	(D=T/# 40124)								
13-2	1	194441-13303	SHAFT ASSY,PROPELLER		1		1			N	2
		(B=T/# 02068)	(D=T/# 42835)								
14	2	194441-13340	JOINT ASSY, CROSS		1		1				
14-1	2	194441-13341	JOINT ASSY, CROSS		1		1			S	
		(B=T/# 01205)	(D=T/# 40124)								
15	3	194441-13310-X	SHAFT, PROPELLER		1		1				
16	3	194441-13390	YOKE		2		2				
16-1	3	194441-13391	YOKE		2		2			S	
		(B=T/# 01205)	(D=T/# 40124)								
17	3	194441-13330	JOURNAL SET		1		1				
18	3	22252-000200	CIRCLIP 20		4		4				
19	3	22351-035036	SPRING PIN 3.5X36		1		1				
19-1	3	22351-035032	SPRING PIN 3.5X32		1		1			N	
		(B=T/# 01205)	(D=T/# 40124)								
20	3	22351-060036	SPRING PIN 6X36		1		1				
20-1	3	22351-060032	SPRING PIN 6X32		1		1			N	
		(B=T/# 01205)	(D=T/# 40124)								
21-1	3	194441-13351	SNAP RING		1		1				
21-2	3	22242-000360	CIRCLIP 36		1		1			S	
		(B=T/# 01205)	(D=T/# 40124)								
21A	3	22351-030010	SPRING PIN 3X10		1		1			W	
		(B=T/# 01205)	(D=T/# 40124)								
22	2	194441-13321	JOINT ASSY, CROSS		1		1				
22-1	2	194441-13322	JOINT ASSY, CROSS		1		1			S	2
		(B=T/# 02068)	(D=T/# 42835)								
23	3	194441-13380	YOKE, SPLINE		1		1				
23-1	3	194441-13381	YOKE, SPLINE		1		1			S	2
		(B=T/# 02068)	(D=T/# 42835)								
24	3	194441-13370	YOKE, SLEEVE		1		1				
25	3	194441-13330	JOURNAL SET		1		1				
26	3	22252-000200	CIRCLIP 20		4		4				
26A	3	24761-010000	NIPPLE M6F, GREASE		1		1			W	2
		(B=T/# 02068)	(D=T/# 42835)								
27	1	194441-13360	BOLT M 8		1		1				
27-1	1	194516-13410	BOLT M 8		1		1			S	3
		(B=T/# 02068)	(D=T/# 42819)								

N:Old $\overset{\text{Yes}}{\underset{\text{No}}{\leftrightarrow}}$ New, Q:Old $\overset{\text{No}}{\underset{\text{Yes}}{\leftrightarrow}}$ New, R:Old $\overset{\text{Yes}}{\underset{\text{Yes}}{\leftrightarrow}}$ New, S:Old $\overset{\text{No}}{\underset{\text{No}}{\leftrightarrow}}$ New, W:Add, Z:Discontinued, F:Interchangeable by set, K:Q'ty Change

++ CONTINUE ++

(C)Copy Rights YANMAR CO.,LTD.

Fig.31. PROPELLER SHAFT & F. AXLE GEAR

Fig. 31 PROPELLER SHAFT & GEARS OF FRONT AXLE [For Model YM186D]

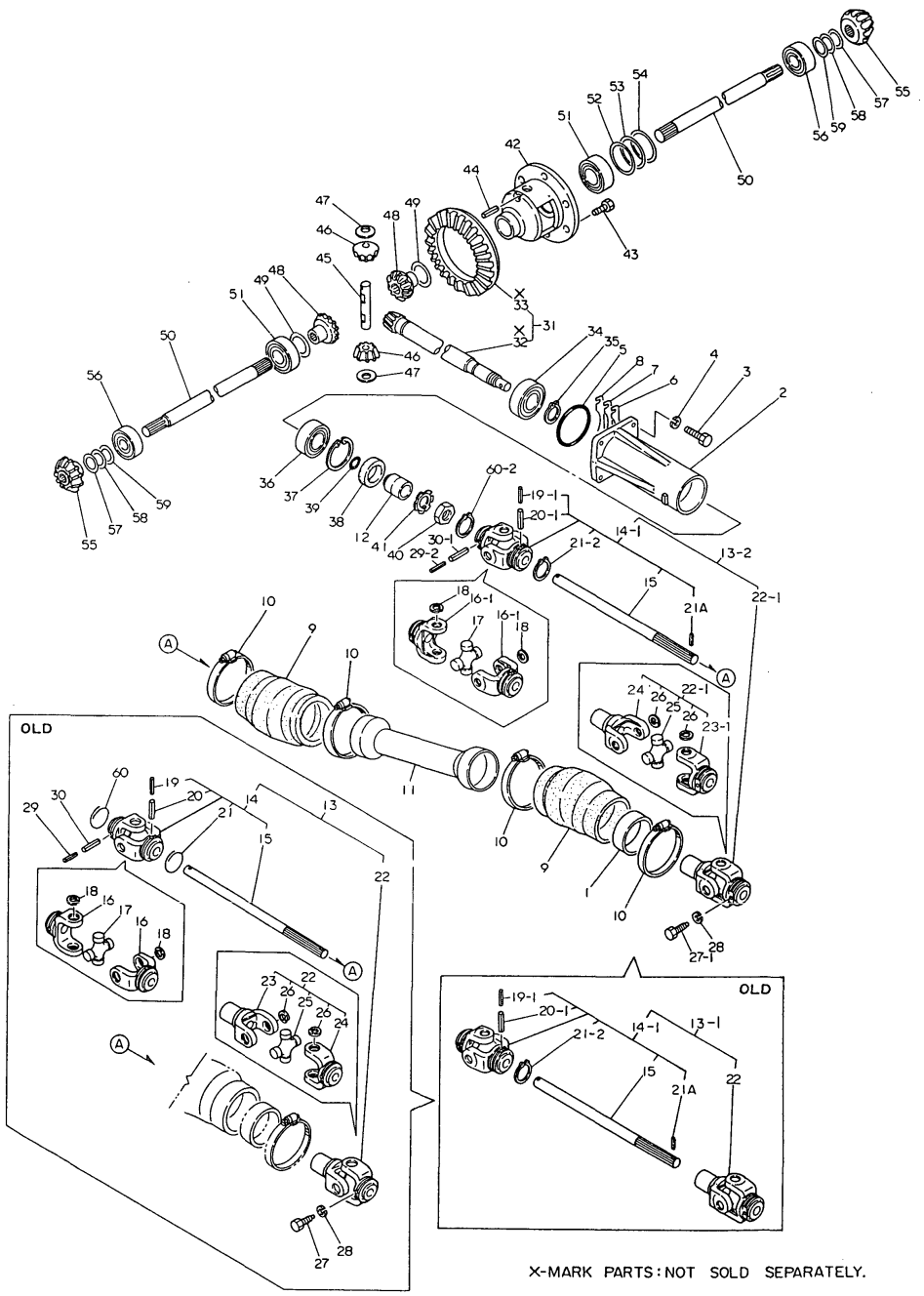

31. PROPELLER SHAFT & F. AXLE GEAR

(A)=YM186 (FLOOR (D)=YM186D(COLUM
(B)=YM186D(FLOOR (E)=
(C)=YM186 (COLUM (F)=

REF.	LEV.	PARTS NO.	DESCRIPTION	Q'TY (A)	(B)	(C)	(D)	(E)	(F)	I	R
27-2	1	194526-13410	BOLT M 8		1		1			N	
		(B=T/# 02103)	(D=T/# 42830)								
28	1	22217-080000	SPRING WASHER 8		1		1				
29-1	1	22351-035036	SPRING PIN 3.5X36		1		1				
29-2	1	22351-035032	SPRING PIN 3.5X32		1		1			N	
		(B=T/# 01205)	(D=T/# 40124)								
30	1	22351-060036	SPRING PIN 6X36		1		1				
30-1	1	22351-060032	SPRING PIN 6X32		1		1			N	
		(B=T/# 01205)	(D=T/# 40124)								
31	1	194447-13100	GEAR ASSY, RING		1		1				
31-1	1	194447-13101	GEAR ASSY, RING		1		1			N	4
		(B=T/# 02167)	(D=T/# 42834)								
34	1	24101-063054	BEARING #6305		1		1				
35	1	22242-000250	CIRCLIP 25S		1		1				
36	1	24101-063044	BALL BEARING		1		1				
37	1	22252-000520	CIRCLIP 52		1		1				
38	1	1A1040-28820	SEAL TC30 52 8, OIL		1		1				
38-1	1	24421-305208	SEAL TC30 52 08, OIL		1		1			R	
		(B=T/# 02021)	(D=T/# 42765)								
39	1	24341-000180	O-RING 1A S-18.0		1		1				
40	1	194300-32260	NUT 20		1		1				
41	1	194301-11660	WASHER 20		1		1				
42	1	194447-13210	CASE, DIFFERENTIAL		1		1				
42-1	1	194447-13211	CASE, DIFFERENTIAL		1		1			N	
		(B=*1980.)	(D=*1980.)								
43	1	194301-11800	BOLT M 8X 14		6		6				
43-1	1	194447-13150	BOLT M 8X 16		6		6			S	4
		(B=T/# 02167)	(D=T/# 42834)								
44	1	22351-040030	SPRING PIN 4X30		1		1				
45	1	194300-31570	SHAFT, DIFFERENTIAL		1		1				
46	1	194300-31560	GEAR, DIFFERENTIAL		2		2				
47	1	194300-31620	WASHER, DIFFERENTIAL		2		2				
48	1	194300-31550	GEAR, DIFFERENTIAL		2		2				
49	1	194300-31610	WASHER, DIFFERENTIAL		2		2				
50	1	194447-13510	SHAFT, FRONT DRIVE		2		2				
51	1	24101-060084	BALL BEARING		2		2				
52	1	194447-13570	SHIM T=0.1F		2		2				1
53	1	194447-13580	SHIM T=0.3F		1		1				1
54	1	194447-13590	SHIM T=0.5F		1		1				1
55	1	194447-13520	PINION, DRIVE SHAFT		2		2				
56	1	24101-063044	BALL BEARING		2		2				
57	1	194447-13530	SHIM T=0.1		4		4				1
58	1	194447-13540	SHIM T=0.3		2		2				1
59	1	194447-13550	SHIM T=0.5		2		2				1
60-1	1	194441-13351	SNAP RING		1		1				
60-2	1	22242-000360	CIRCLIP 36		1		1			S	
		(B=T/# 01205)	(D=T/# 40124)								

N:Old $\xleftarrow[\text{No}]{\text{Yes}}$ New, Q:Old $\xleftarrow[\text{Yes}]{\text{No}}$ New, R:Old $\xleftarrow[\text{Yes}]{\text{Yes}}$ New, S:Old $\xleftarrow[\text{No}]{\text{No}}$ New, W:Add, Z:Discontinued, F:Interchangeable by set, K:Q'ty Change

(C)Copy Rights YANMAR CO.,LTD.

Fig.32. TIE-ROD OF FRONT AXLE (YM186D)

Fig. 32 TIE-ROD OF FRONT AXLE [For Model YM186D]

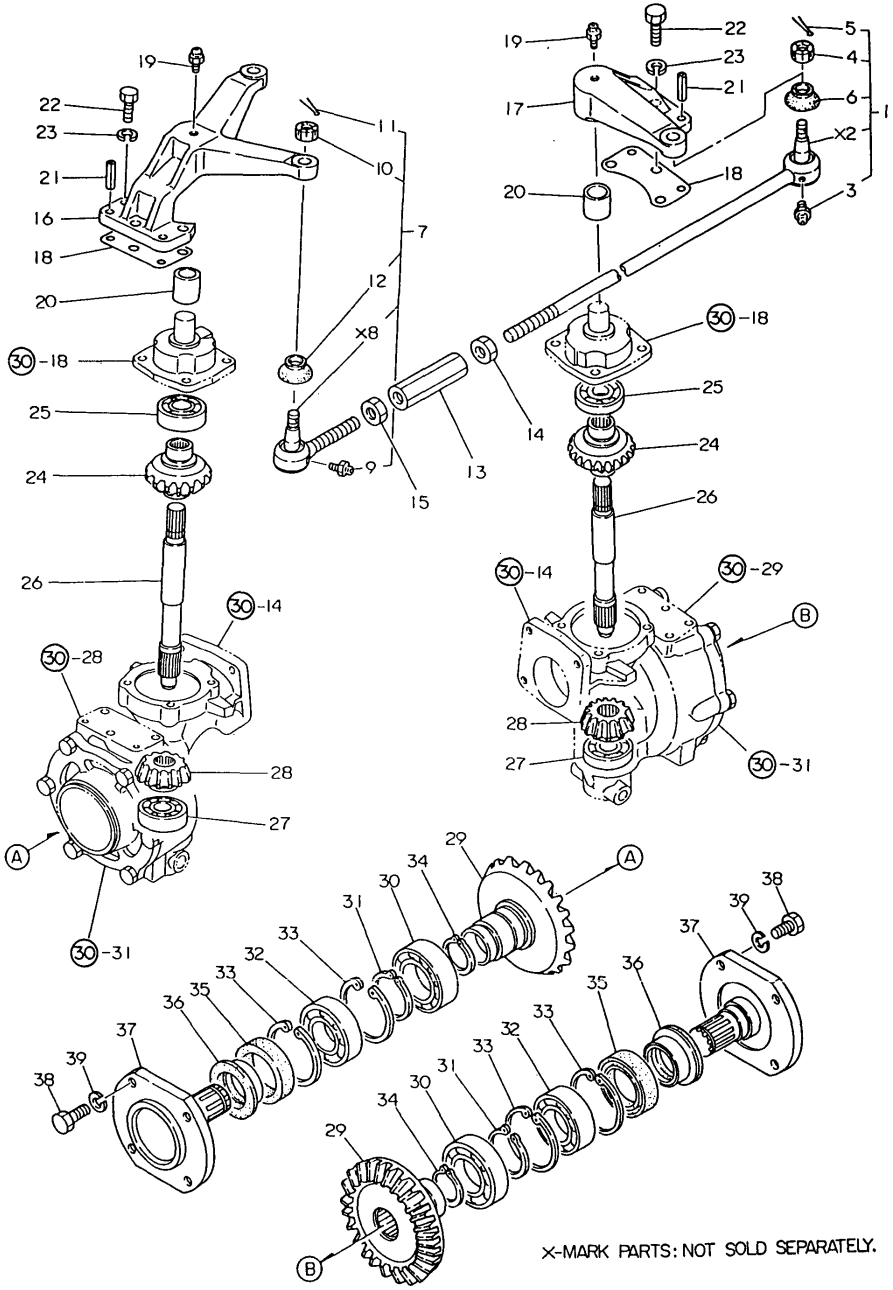

32. TIE-ROD OF FRONT AXLE (YM186D)

(A)=YM186 (FLOOR (D)=YM186D(COLUM
(B)=YM186D(FLOOR (E)=
(C)=YM186 (COLUM (F)=

REF.	LEV.	PARTS NO.	DESCRIPTION	Q'TY (A)	(B)	(C)	(D)	(E)	(F)	I	R
1	1	794150-12301	TIE-ROD ASSY		1		1				
1-1	1	194150-12300	TIE-ROD ASSY		1		1			N	
		(B=T/# 02117)	(D=T/# 42791)								
3	2	194730-57411	GREASE NIPPLE A		1		1				
3-1	2	24761-060000	NIPPLE MT6X1, GREASE		1		1			N	
		(B=T/# 02117)	(D=T/# 42791)								
4	2	194730-57241	NUT M12		1		1				
5	2	22417-300250	COTTER PIN 3.0X 25		1		1				
6	2	194730-57220	COVER, DUST		1		1			W	
		(B=T/# 02117)	(D=T/# 42791)								
7	1	794730-57112	END ASSY, TIE-ROD		1		1				
7-1	1	194730-57110	END ASSY, TIE-ROD		1		1			N	
		(B=T/# 02117)	(D=T/# 42791)								
9-1	2	194730-57411	GREASE NIPPLE A		1		1				
9-2	2	24761-060000	NIPPLE MT6X1, GREASE		1		1			N	
		(B=T/# 02117)	(D=T/# 42791)								
10	2	194730-57241	NUT M12		1		1				
11	2	22417-300250	COTTER PIN 3.0X 25		1		1				
12	2	194730-57220	COVER, DUST		1		1			W	
		(B=T/# 02117)	(D=T/# 42791)								
13	1	194150-12410-U	TURNBUCKLE M17X95		1		1				
14	1	194990-22830	NUT M17		1		1				
15	1	194990-22840	NUT M17		1		1				
16	1	194447-13810-X	SUPPORT(L), KING PIN		1		1				
16-1	1	194447-13811-X	SUPPORT(L), KING PIN		1		1			S	
		(B=T/# 01241)	(D=T/# 40328)								
16-2	1	194447-13812-X	SUPPORT(L), KING PIN		1		1			N	
		(B=T/# 02019)	(D=T/# 42751)								
17	1	194447-13820-X	SUPPORT(R), KING PIN		1		1				
17-1	1	194447-13821-X	SUPPORT(R), KING PIN		1		1			S	
		(B=T/# 01241)	(D=T/# 40328)								
18	1	194447-13760	SHIM T=0.5		4		4				1
19	1	24761-010000	NIPPLE M6F, GREASE		2		2				
20	1	194150-11350	BUSH 2F25X1.5X25		2		2				
20-1	1	194321-11921	BUSH 35X39X20		2		2			S	
		(B=T/# 01241)	(D=T/# 40328)								
21	1	22351-080020	SPRING PIN 8X20		4		4				
22	1	26116-100302	BOLT M10X 30 PLATED		6		6				
22-1	1	26116-100302	BOLT M10X 30 PLATED		4		4			K	
		(B=T/# 02019)	(D=T/# 42751)								
23	1	22217-100000	SPRING WASHER 10		6		6				
24	1	194447-13940	GEAR, FRONT DRIVE		2		2				
25	1	24104-062064	BALL BEARING		2		2				
26	1	194447-13850	SHAFT (2ND), FRONT		2		2				
27	1	24101-063044	BALL BEARING		2		2				
27-1	1	194447-13860	BALL BEARING		2		2			N	
		(B=T/# 01172)	(D=FROM 1ST)								
28	1	194447-13950	PINION, FINAL		2		2				
29	1	194447-14120	GEAR, FINAL		2		2				
30	1	24101-060104	BALL BEARING		2		2				
31	1	22242-000500	CIRCLIP 50		2		2				

N:Old $\overset{\text{Yes}}{\underset{\text{No}}{\leftrightarrow}}$ New, Q:Old $\overset{\text{No}}{\underset{\text{Yes}}{\leftrightarrow}}$ New, R:Old $\overset{\text{Yes}}{\underset{\text{Yes}}{\leftrightarrow}}$ New, S:Old $\overset{\text{No}}{\underset{\text{No}}{\leftrightarrow}}$ New, W:Add, Z:Discontinued, F:Interchangeable by set, K:Q'ty Change

++ CONTINUE ++

(C)Copy Rights YANMAR CO.,LTD.

Fig.32. TIE-ROD OF FRONT AXLE (YM186D)

Fig. 32 TIE-ROD OF FRONT AXLE [For Model YM186D]

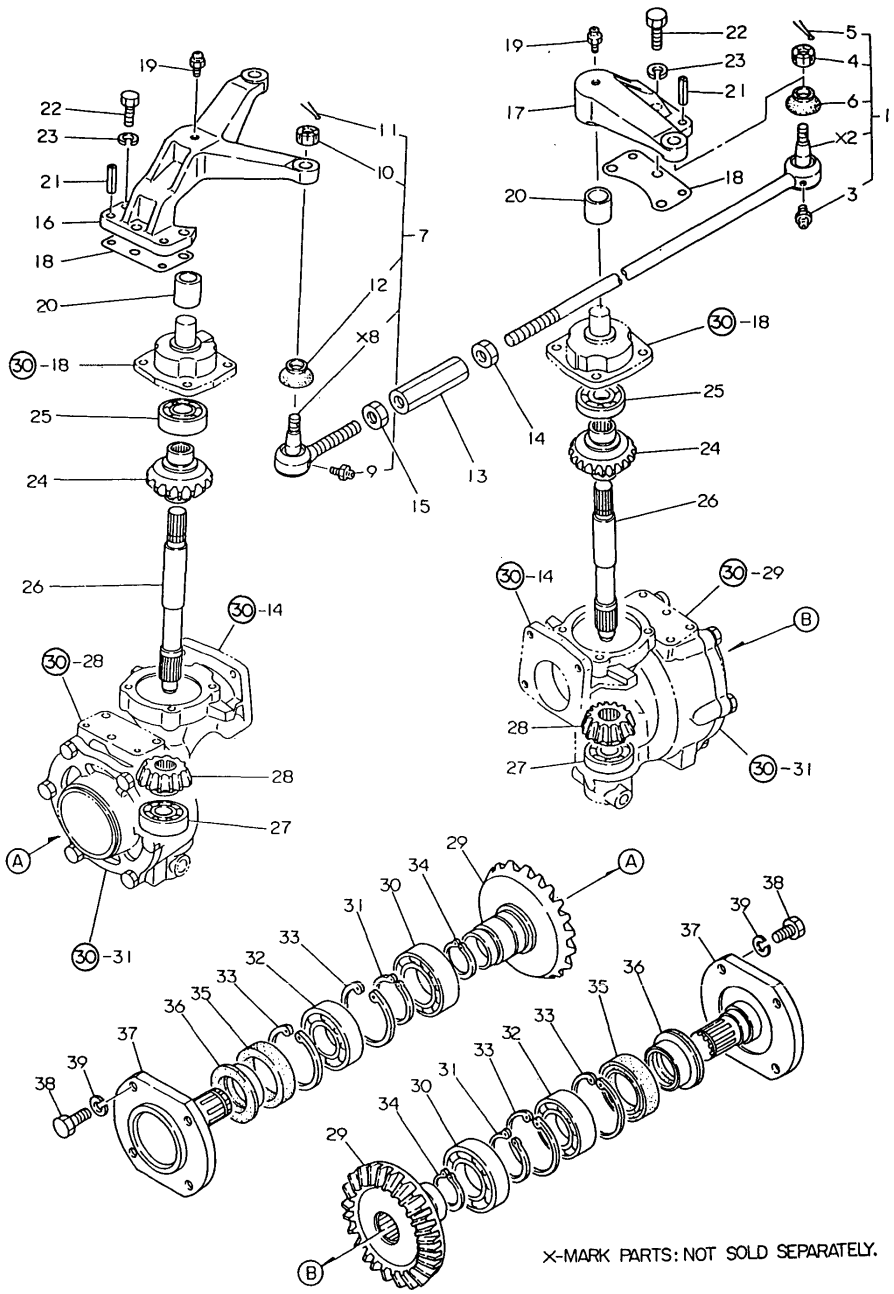

0CT10-G22801

32. TIE-ROD OF FRONT AXLE (YM186D)

(A)=YM186 (FLOOR
(B)=YM186D(FLOOR
(C)=YM186 (COLUM
(D)=YM186D(COLUM
(E)=
(F)=

REF.	LEV.	PARTS NO.	DESCRIPTION	Q'TY (A)	(B)	(C)	(D)	(E)	(F)	I	R
32	1	24101-060094	BALL BEARING		2		2				
33	1	22252-000750	CIRCLIP 75		4		4				
34	1	22242-000340	CIRCLIP 34		2		2				
35	1	194447-14140	SEAL TC6Y 57 75 12		2		2				
36	1	194447-14180	SLEEVE SL525718		2		2				
37	1	194447-14110-X	SPINDLE, FRONT		2		2				
38-1	1	194465-14210	BOLT M14X 28		8		8				
38-2	1	194279-14210	BOLT M14X 28		8		8			N	
		(B=T/# 02189)	(D=T/# 42882)								
39-1	1	194465-14220	WASHER 14		8		8				
39-2	1	194279-14220	WASHER 14		8		8			N	
		(B=T/# 02189)	(D=T/# 42882)								
40	1	26116-100552	BOLT M10X 55 PLATED		2		2			W	
		(B=T/# 02019)	(D=T/# 42751)								

N:Old ◄Yes/No► New, Q:Old ◄No/Yes► New, R:Old ◄Yes/Yes► New, S:Old ◄No/No► New, W:Add, Z:Discontinued, F:Interchangeable by set, K:Q'ty Change

(C)Copy Rights YANMAR CO.,LTD.

Fig.33. STEERING

Fig. 33 STEERING

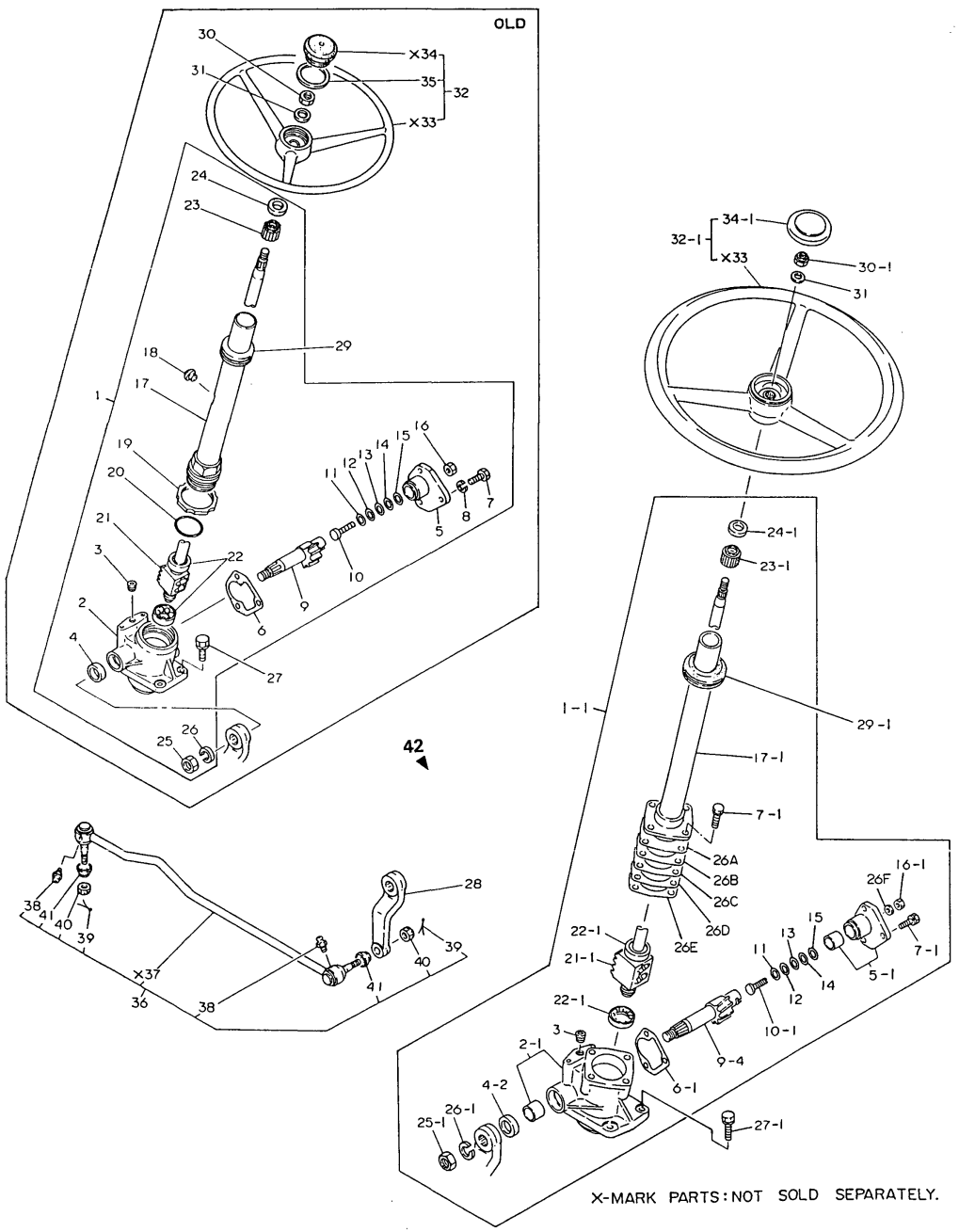

33. STEERING

(A)=YM186 (FLOOR (D)=YM186D(COLUM
(B)=YM186D(FLOOR (E)=
(C)=YM186 (COLUM (F)=

REF.	LEV.	PARTS NO.	DESCRIPTION	Q'TY (A)	(B)	(C)	(D)	(E)	(F)	I	R
1	1	194440-15100-X	GEAR ASSY, STEERING	1	1	1	1				
1-1	1	194115-15100	GEAR ASSY, STEERING	1	1	1	1			S	1
	(A=T/# 00830)	(B=T/# 02067)	(C=T/# 20966) (D=T/# 42815)								
2	2	194440-15110-X	BOX W/BUSH, GEAR	1	1	1	1				
2-1	2	194115-15110	BOX W/BUSH, GEAR	1	1	1	1			S	1
	(A=T/# 00830)	(B=T/# 02067)	(C=T/# 20966) (D=T/# 42815)								
3	2	194262-15170	PLUG PT1/8	1	1	1	1				
4-1	2	194262-15220	SEAL TV 223508, OIL	1	1	1	1				
4-2	2	194740-55620	SEAL, OIL	1	1	1	1			S	1
	(A=T/# 00830)	(B=T/# 02067)	(C=T/# 20966) (D=T/# 42815)								
5	2	194262-15150-X	COVER W/BUSH, SIDE	1	1	1	1				
5-1	2	194515-15150	COVER ASSY, SIDE	1	1	1	1			S	1
	(A=T/# 00830)	(B=T/# 02067)	(C=T/# 20966) (D=T/# 42815)								
6-1	2	194262-15330	GASKET, SIDE COVER	1	1	1	1				
6-2	2	194310-15320	GASKET, SIDE COVER	1	1	1	1			S	1
	(A=T/# 00830)	(B=T/# 02067)	(C=T/# 20966) (D=T/# 42815)								
7	2	26116-080202	BOLT M 8X 20 PLATED	3	3	3	3				
7-1	2	26013-080222	BOLT M 8X 22	7	7	7	7			N	1
	(A=T/# 00830)	(B=T/# 02067)	(C=T/# 20966) (D=T/# 42815)								
8	2	22217-080000	SPRING WASHER 8	3	3	3	3			Z	
	(A=T/# 00830)	(B=T/# 02067)	(C=T/# 20966) (D=T/# 42815)								
9-2	2	194262-15410	SHAFT, SECTOR	1	1	1	1				
9-4	2	194115-15140	SHAFT, SECTOR	1	1	1	1			N	1
	(A=T/# 00830)	(B=T/# 02067)	(C=T/# 20966) (D=T/# 42815)								
10	2	194262-15470	SCREW, ADJUSTING	1	1	1	1				
10-1	2	194130-15470	SCREW, ADJUSTING	1	1	1	1			S	1
	(A=T/# 00830)	(B=T/# 02067)	(C=T/# 20966) (D=T/# 42815)								
11	2	194262-15420	SHIM (A) (T=1.525)	1	1	1	1				2
11-1	2	194080-15420	SHIM (A) (T=1.525)	1	1	1	1			R	2
	(A=*)	(B=*)	(C=*) (D=*)								
12	2	194262-15430	SHIM (B) (T=1.555)	1	1	1	1				2
12-1	2	194080-15430	SHIM (B) (T=1.555)	1	1	1	1			R	2
	(A=*)	(B=*)	(C=*) (D=*)								
13	2	194262-15440	SHIM (C) (T=1.585)	1	1	1	1				2
13-1	2	194080-15440	SHIM (C) (T=1.585)	1	1	1	1			R	2
	(A=*)	(B=*)	(C=*) (D=*)								
14	2	194262-15450	SHIM (D) (T=1.615)	1	1	1	1				2
14-1	2	194080-15450	SHIM (D) (T=1.615)	1	1	1	1			R	2
	(A=*)	(B=*)	(C=*) (D=*)								
15	2	194262-15460	SHIM (E) (T=1.645)	1	1	1	1				2
15-1	2	194262-15460	SHIM (E) (T=1.645)	1	1	1	1			R	2
	(A=*)	(B=*)	(C=*) (D=*)								
16	2	26716-080002	NUT M 8	1	1	1	1				
16-1	2	26776-100002	LOCK NUT M10 PLATED	1	1	1	1			S	1
	(A=T/# 00830)	(B=T/# 02067)	(C=T/# 20966) (D=T/# 42815)								
17	2	194440-15200	COLUMN	1	1	1	1				
17-1	2	194115-15250	COLUMN	1	1	1	1			S	1
	(A=T/# 00830)	(B=T/# 02067)	(C=T/# 20966) (D=T/# 42815)								
18	2	194440-15340	PLUG, BREATHER	1	1	1	1				
18-1	2	194440-15341	PLUG, BREATHER	1	1	1	1			S	
	(A=T/# 00867)	(B=T/# 02257)	(C=T/# 20972) (D=T/# 42883)								

N:Old $\xleftarrow[\text{No}]{\text{Yes}}$ New, Q:Old $\xleftarrow[\text{Yes}]{\text{No}}$ New, R:Old $\xleftarrow[\text{Yes}]{\text{Yes}}$ New, S:Old $\xleftarrow[\text{No}]{\text{No}}$ New, W:Add, Z:Discontinued, F:Interchangeable by set, K:Q'ty Change

++ CONTINUE ++

(C)Copy Rights YANMAR CO.,LTD.

Fig.33. STEERING

Fig. 33 STEERING

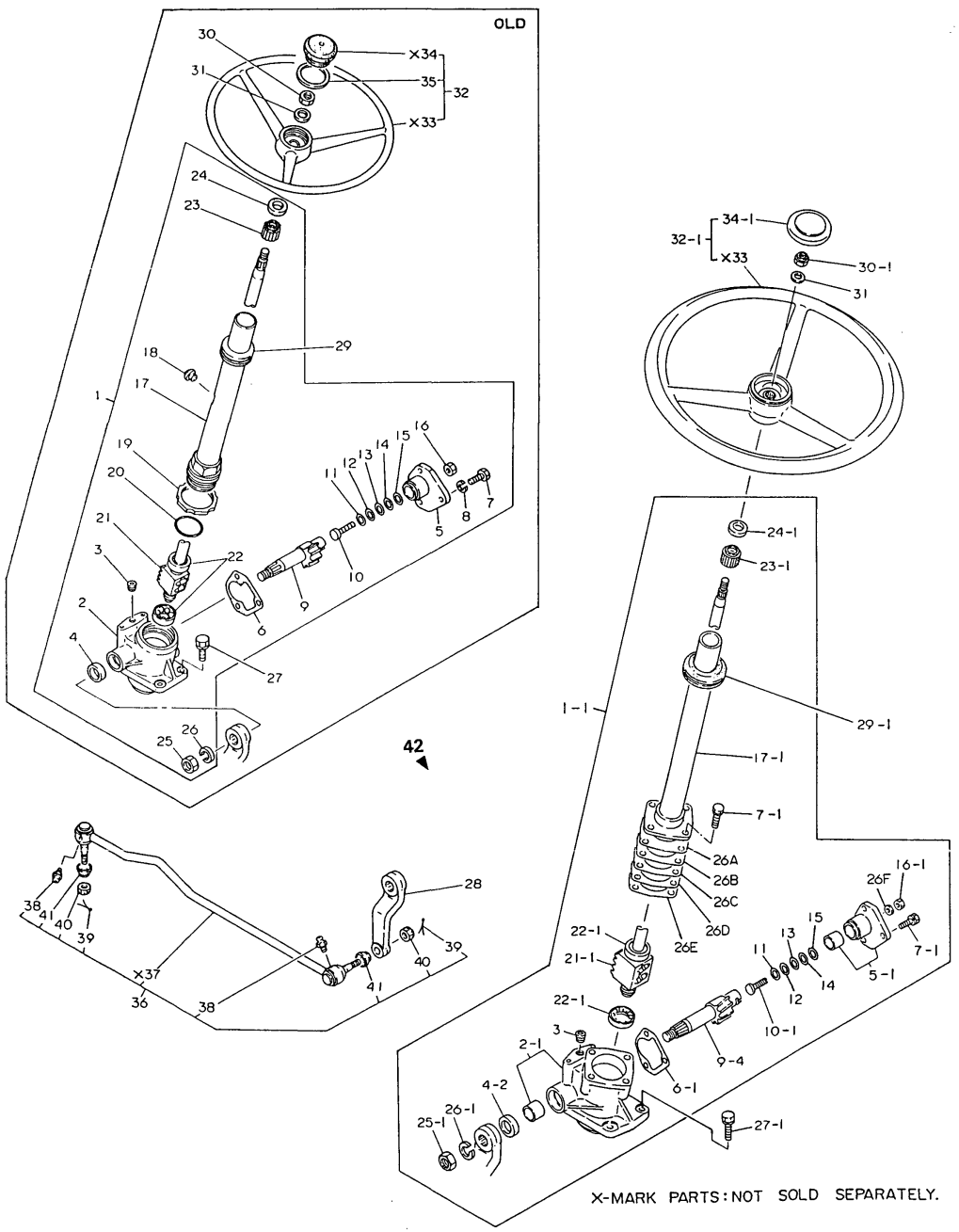

33. STEERING

(A)=YM186 (FLOOR (D)=YM186D(COLUM
(B)=YM186D(FLOOR (E)=
(C)=YM186 (COLUM (F)=

REF.	LEV.	PARTS NO.	DESCRIPTION	Q'TY (A)	(B)	(C)	(D)	(E)	(F)	I	R
19	2	194440-15230	LOCK NUT	1	1	1	1			Z	1
	(A=T/# 00830)	(B=T/# 02067)	(C=T/# 20966) (D=T/# 42815)								
20	2	194440-15240	O-RING	1	1	1	1			Z	
	(A=T/# 00867)	(B=T/# 02257)	(C=T/# 20972) (D=T/# 42883)								
21	2	194440-15500	NUT ASSY, BALL	1	1	1	1				
21-1	2	194115-15500	NUT ASSY, BALL	1	1	1	1			S	1
	(A=T/# 00830)	(B=T/# 02067)	(C=T/# 20966) (D=T/# 42815)								
22	2	194262-15520	BEARING	2	2	2	2				
22-1	2	194750-15520	ROLLER BEARING	2	2	2	2			S	1
	(A=T/# 00830)	(B=T/# 02067)	(C=T/# 20966) (D=T/# 42815)								
23	2	194262-15310	BUSH, COLUMN	1	1	1	1				
23-1	2	194241-15310	BUSH, COLUMN	1	1	1	1			S	1
	(A=T/# 00830)	(B=T/# 02067)	(C=T/# 20966) (D=T/# 42815)								
24-1	2	194241-15350	SEAL, OIL	1	1	1	1				
25	2	26736-160002	NUT M16	1	1	1	1				
25-1	2	26776-200002	LOCK NUT M20 PLATED	1	1	1	1			S	1
	(A=T/# 00830)	(B=T/# 02067)	(C=T/# 20966) (D=T/# 42815)								
26	2	22217-160000	SPRING WASHER 16	1	1	1	1				
26-1	2	22217-200000	SPRING WASHER 20	1	1	1	1			S	1
	(A=T/# 00830)	(B=T/# 02067)	(C=T/# 20966) (D=T/# 42815)								
26A	2	194750-15250	SHIM T=0.05	1	1	1	1			W	2
	(A=T/# 00830)	(B=T/# 02067)	(C=T/# 20966) (D=T/# 42815)								
26B	2	194750-15260	SHIM T=0.07	1	1	1	1			W	2
	(A=T/# 00830)	(B=T/# 02067)	(C=T/# 20966) (D=T/# 42815)								
26C	2	194750-15270	SHIM T=0.08	1	1	1	1			W	2
	(A=T/# 00830)	(B=T/# 02067)	(C=T/# 20966) (D=T/# 42815)								
26D	2	194750-15280	SHIM T=0.1	1	1	1	1			W	2
	(A=T/# 00830)	(B=T/# 02067)	(C=T/# 20966) (D=T/# 42815)								
26E	2	194750-15290	SHIM T=0.2	1	1	1	1			W	2
	(A=T/# 00830)	(B=T/# 02067)	(C=T/# 20966) (D=T/# 42815)								
26F	2	194464-15450	SEAL WASHER	1	1	1	1			W	1
	(A=*)	(B=*)	(C=*) (D=*)								
27	1	194190-15560	BOLT	4	4	4	4				
27-1	1	26013-100302	BOLT M10X 30	4	4	4	4			N	
	(A=*)	(B=*)	(C=*) (D=*)								
27-2	1	26106-100302	BOLT M10X 30 PLATED	4	4	4	4			N	
	(A=T/# 00909)	(B=T/# 02372)	(C=T/# 20991) (D=T/# 42957)								
28	1	194440-15610	ARM, PITMAN	1	1	1	1				
28-1	1	194500-15610	ARM, PITMAN	1	1	1	1			S	1
	(A=T/# 00830)	(B=T/# 02067)	(C=T/# 20966) (D=T/# 42815)								
29	1	194440-15650	GROMMET 32	1	1	1	1				
29-1	1	194145-15651	GROMMET 42	1	1	1	1			S	1
	(A=T/# 00830)	(B=T/# 02067)	(C=T/# 20966) (D=T/# 42815)								
30	1	26357-120002	U-NUT M12	1	1	1	1				
30-1	1	26356-120002	U-NUT M12	1	1	1	1			N	
	(A=*)	(B=*)	(C=*) (D=*)								
31	1	194080-15550	WASHER 12	1	1	1	1				
32-1	1	194440-15800	WHEEL ASSY, STEERING	1	1	1	1				
34-1	2	194440-15870	CAP, STEERING WHEEL	1	1	1	1				
35	2	194440-15760	RING, SNAP	1	1	1	1			Z	
	(A=*)	(B=*)	(C=*) (D=*)								

N:Old $\xleftarrow[\text{No}]{\text{Yes}}$ New, Q:Old $\xleftarrow[\text{Yes}]{\text{No}}$ New, R:Old $\xleftarrow[\text{Yes}]{\text{Yes}}$ New, S:Old $\xleftarrow[\text{No}]{\text{No}}$ New, W:Add, Z:Discontinued, F:Interchangeable by set, K:Q'ty Change

++ CONTINUE ++

(C)Copy Rights YANMAR CO.,LTD.

Fig.33. STEERING

Fig. 33 STEERING

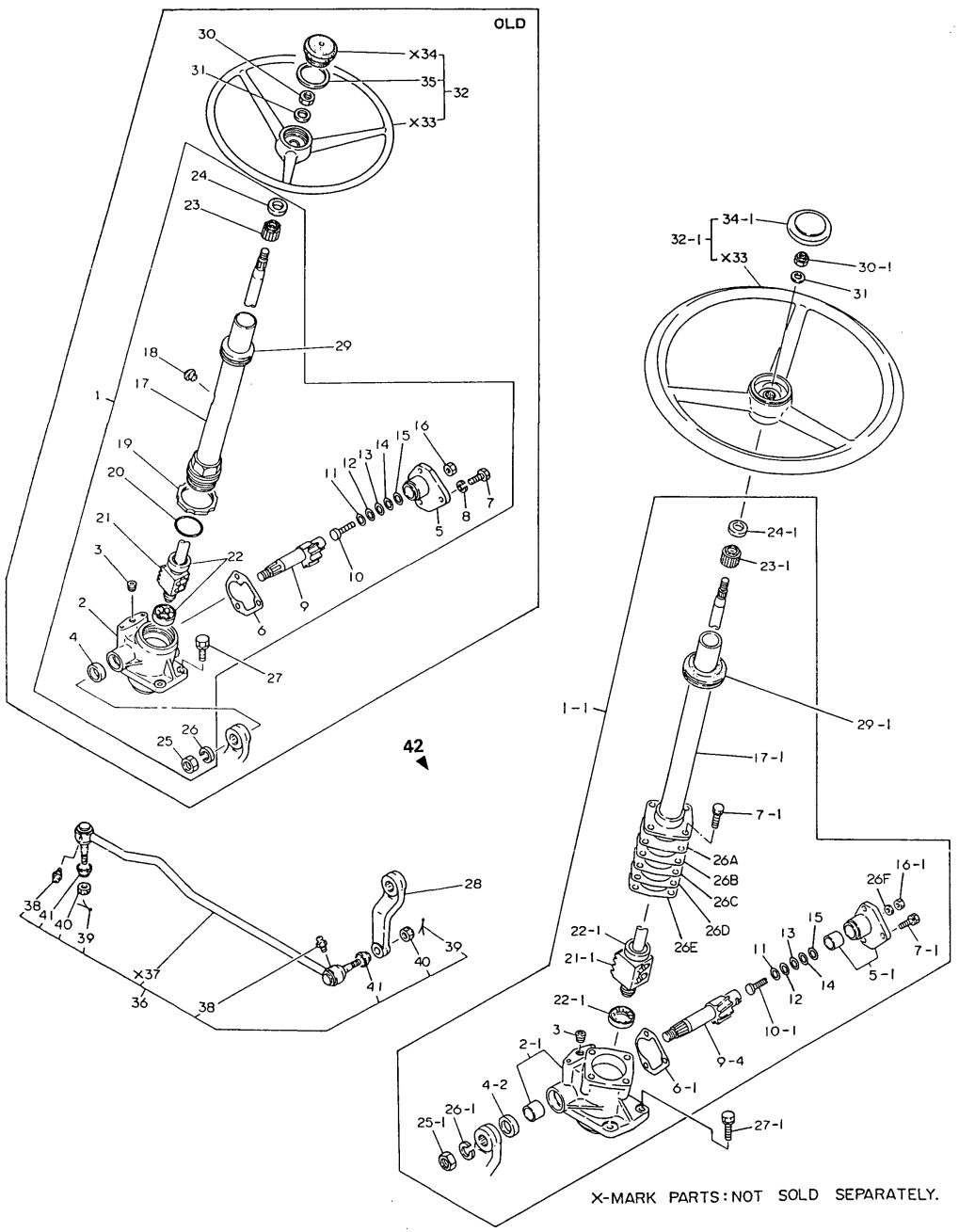

33. STEERING

(A)=YM186 (FLOOR (D)=YM186D(COLUM
(B)=YM186D(FLOOR (E)=
(C)=YM186 (COLUM (F)=

REF.	LEV.	PARTS NO.	DESCRIPTION	Q'TY (A)	(B)	(C)	(D)	(E)	(F)	I	R
36	1	194446-16100-X	ROD ASSY, DRAG	1	1	1	1				
36-1	1	194446-16101	ROD ASSY, DRAG	1	1	1	1			N	
	(A=T/# 00792)	(B=T/# 01968)	(C=T/# 20952) (D=T/# 42682)								
36-2	1	194446-16102	ROD ASSY, DRAG	1	1	1	1			N	
	(A=T/# 00851)	(B=T/# 02117)	(C=T/# 20967) (D=T/# 42830)								
38	2	194730-57411	GREASE NIPPLE A	2	2	2	2				
38-1	2	24761-060000	NIPPLE MT6X1, GREASE	2	2	2	2			N	
	(A=T/# 00851)	(B=T/# 02117)	(C=T/# 20967) (D=T/# 42830)								
39	2	22417-300250	COTTER PIN 3.0X 25	2	2	2	2				
40	2	194730-57241	NUT M12	2	2	2	2				
41	2	194730-57220	COVER, DUST	2	2	2	2				
42	1	794500-15100	STEERING ASSY	1	1	1	1			W	1
	(A=T/# 00830)	(B=T/# 02067)	(C=T/# 20966) (D=T/# 42815)								
43	2	*REF.33=1-1	GEAR ASSY, STEERING	1	1	1	1				
44	3	*REF.33=2-1	BOX, GEAR	1	1	1	1				
45	3	*REF.33=9-4	SHAFT, SECTOR	1	1	1	1				
46	3	*REF.33=5-1	COVER ASSY, SIDE	1	1	1	1				
47	3	*REF.33=3	PLUG PT1/8	1	1	1	1				
48	3	*REF.33=17-1	COLUMN	1	1	1	1				
49	3	*REF.33=26A	SHIM T=0.05	1	1	1	1				
50	3	*REF.33=26B	SHIM T=0.07	1	1	1	1				
51	3	*REF.33=26C	SHIM T=0.08	1	1	1	1				
52	3	*REF.33=26D	SHIM T=0.1	1	1	1	1				
53	3	*REF.33=26E	SHIM T=0.2	1	1	1	1				
54	3	*REF.33=23-1	BUSHING, COLUMN	1	1	1	1				
55	3	*REF.33=6-2	GASKET, SIDE COVER	1	1	1	1				
56	3	*REF.33=18-1	PLUG, BREATHER	1	1	1	1				
57	3	*REF.33=24-1	SEAL, COLUMN	1	1	1	1				
58	3	*REF.33=11-1	SHIM	1	1	1	1				
59	3	*REF.33=12-1	SHIM	1	1	1	1				
60	3	*REF.33=13-1	SHIM	1	1	1	1				
61	3	*REF.33=14-1	SHIM	1	1	1	1				
62	3	*REF.33=26F	SEAL,SCREW	1	1	1	1				
63	3	*REF.33=15-1	SHIM	1	1	1	1				
64	3	*REF.33=10-1	SCREW	1	1	1	1				
65	3	*REF.33=21-1	NUT, BALL	1	1	1	1				
66	3	*REF.33=22-1	BEARING	1	1	1	1				
67	3	*REF.33=4-2	SEAL, SECTOR SHAFT	1	1	1	1				
68	3	*REF.33=26-1	WASHER 20	1	1	1	1				
69	3	*REF.33=7-1	BOLT W/WASHER 8* 22	7	7	7	7				
70	3	*REF.33=16-1	NUT 10	1	1	1	1				
71	3	*REF.33=25-1	NUT 20	1	1	1	1				
72	2	*REF.33=28-1	ARM, PITMAN	1	1	1	1				
73	2	*REF.33=29-1	GROMMET 42	1	1	1	1				
74	2	*REF.60=57-2	STAY, DASHBOARD	1	1	1	1				
75	2	*REF.60=73-1	COVER, GEAR BOX	1	1	1	1				
76	2	194305-99610	BOLT M 10X 30	4	4	4	4				

N:Old $\frac{\text{Yes}}{\text{No}}$ New, Q:Old $\frac{\text{No}}{\text{Yes}}$ New, R:Old $\frac{\text{Yes}}{\text{Yes}}$ New, S:Old $\frac{\text{No}}{\text{No}}$ New, W:Add, Z:Discontinued, F:Interchangeable by set, K:Q'ty Change

(C)Copy Rights YANMAR CO.,LTD.

Fig.34. CLUTCH HOUSING

Fig. 34 CLUTCH HOUSING

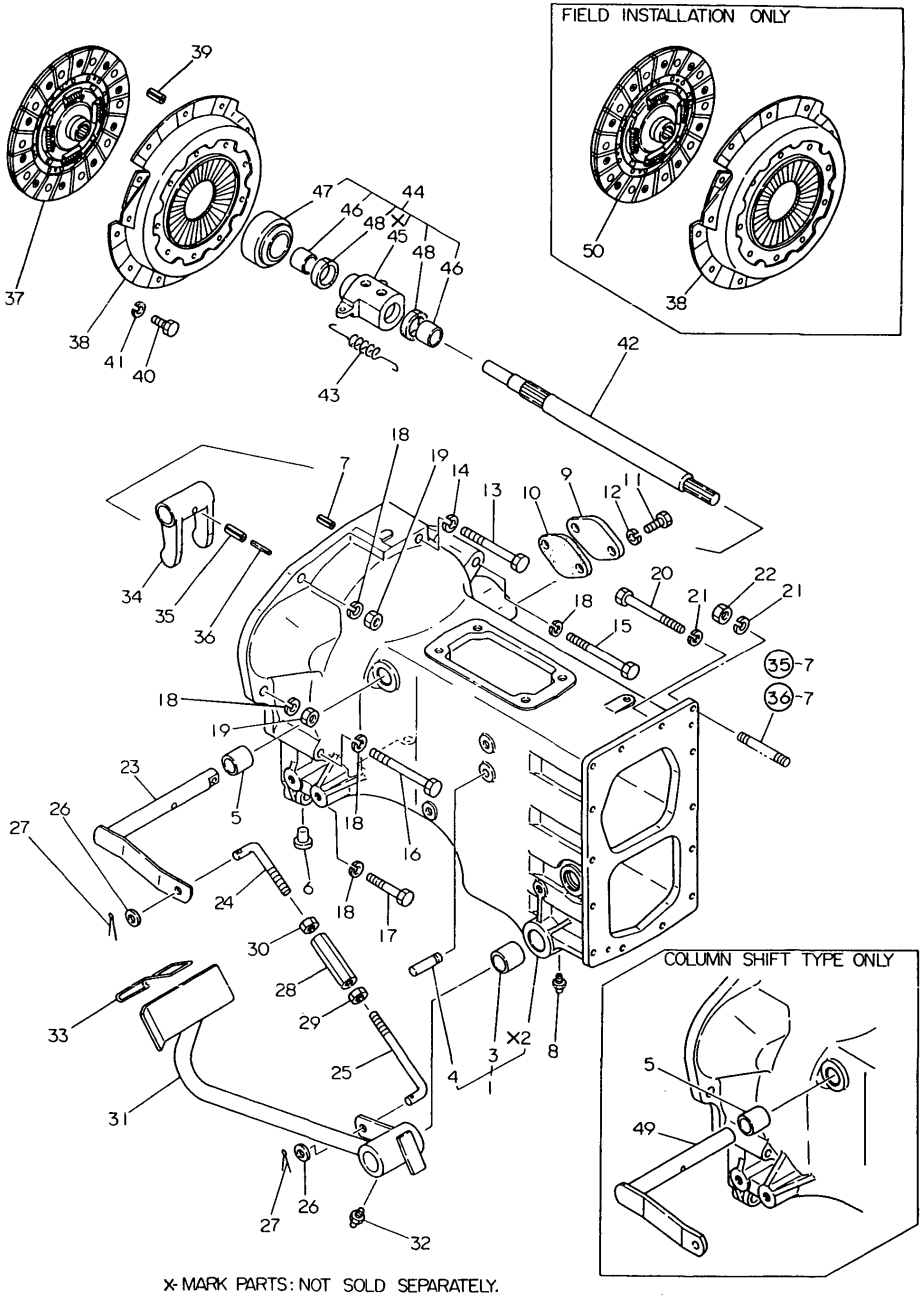

X-MARK PARTS: NOT SOLD SEPARATELY.

34. CLUTCH HOUSING

(A)=YM186 (FLOOR (D)=YM186D(COLUM
(B)=YM186D(FLOOR (E)=
(C)=YM186 (COLUM (F)=

REF.	LEV.	PARTS NO.	DESCRIPTION	Q'TY (A)	(B)	(C)	(D)	(E)	(F)	I	R
1	1	194440-21100-X	HOUSING ASSY, CLUTCH	1	1	1	1				
1-1	1	194440-21101-X	HOUSING ASSY, CLUTCH	1	1	1	1				N
	(A=T/# 00529)	(B=T/# 01248)	(C=T/# 20188) (D=T/# 40523)								
1-2	1	194440-21102-X	HOUSING ASSY, CLUTCH	1	1	1	1				N
	(A=T/# 00730)	(B=T/# 01652)	(C=T/# 20858) (D=T/# 42030)								
1-3	1	194446-21100	HOUSING ASSY, CLUTCH	1	1	1	1				N
	(A=T/# 00851)	(B=T/# 02117)	(C=T/# 20958) (D=T/# 42833)								
3	2	194190-21190	BUSH 25X28X15	4	4	4	4				
3-1	2	194740-06080	BUSH 25X30X18	4	4	4	4				S
	(A=T/# 00270)	(B=T/# 00119)	(C=T/# 20101) (D=T/# 40101)								
4	2	194150-22250	PIN, HOOK	2	2	2	2				
5	2	194130-22280	BUSH 20X25X25	2	2	2	2				W
	(A=T/# 00529)	(B=T/# 01248)	(C=T/# 20188) (D=T/# 40523)								
6	1	194150-21910	PLUG 11.2	6	6	6	6				
7	1	22351-080018	SPRING PIN 8X18	2	2	2	2				
8	1	24761-010000	NIPPLE M6F, GREASE	2	2	2	2				
9	1	194146-21150-X	COVER, SIDE	1	1	1	1				
10	1	194146-21160	GASKET	1	1	1	1				
10-1	1	194146-21161	GASKET	1	1	1	1				N
	(A=T/# 00790)	(B=T/# 01965)	(C=T/# 20940) (D=T/# 42624)								
11	1	26116-080162	BOLT M 8X 16 PLATED	2	2	2	2				
11-1	1	26013-080162	BOLT W/WASHER M8X16	2	2	2	2				N
	(A=*)	(B=*)	(C=*) (D=*)								
12	1	22217-080000	SPRING WASHER 8	2	2	2	2				Z
	(A=*)	(B=*)	(C=*) (D=*)								
13	1	26116-080852	BOLT M 8X 85 PLATED	1	1	1	1				
13-1	1	26013-080852	BOLT M 8X 85	1	1	1	1				N
	(A=*)	(B=*)	(C=*) (D=*)								
14	1	22217-080000	SPRING WASHER 8	1	1	1	1				Z
	(A=*)	(B=*)	(C=*) (D=*)								
15	1	26116-100902	BOLT M10X 90 PLATED	1	1	1	1				
16	1	26116-100802	BOLT M10X 80 PLATED	2	2	2	2				
17-1	1	26116-100502	BOLT M10X 50 PLATED	2	2	2	2				
18-1	1	22217-100000	SPRING WASHER 10	7	7	7	7				
19	1	26716-100002	NUT M10	2	2	2	2				
20	1	26116-080752	BOLT M 8X 75 PLATED	10	10	10	10				
21	1	22217-080000	SPRING WASHER 8	14	14	14	14				
22-1	1	26716-080002	NUT M 8	4	4	4	4				
23	1	194440-22331-X	SHAFT,CLUTCH RELEASE	1	1						
24	1	194440-22460	ROD, CLUTCH	1	1	1	1				
25	1	194440-22470	ROD, CLUTCH	1	1	1	1				
26	1	22137-080000	WASHER 8, POLISHED	2	2	2	2				
27	1	22417-200300	COTTER PIN 2.0X30	2	2	2	2				
28	1	194740-00322	TURNBUCKLE	1	1	1	1				
29	1	26716-080002	NUT M 8	1	1	1	1				
30	1	194990-20170	NUT W/WASHER 8	1	1	1	1				
31	1	194446-22400-X	PEDAL ASSY, CLUTCH	1	1	1	1				
32	1	24761-010000	NIPPLE M6F, GREASE	1	1	1	1				
33	1	194440-22441	LEVER, CLUTCH LOCK	1	1	1	1				
34	1	194150-22310	YOKE, CLUTCH SHIFT	1	1	1	1				
34-1	1	194150-22311	YOKE, CLUTCH SHIFT	1	1	1	1				N

N:Old $\frac{\text{Yes}}{\text{No}}$ New, Q:Old $\frac{\text{No}}{\text{Yes}}$ New, R:Old $\frac{\text{Yes}}{\text{Yes}}$ New, S:Old $\frac{\text{No}}{\text{No}}$ New, W:Add, Z:Discontinued, F:Interchangeable by set, K:Q'ty Change

++ CONTINUE ++

(C)Copy Rights YANMAR CO.,LTD.

Fig.34. CLUTCH HOUSING

Fig. 34 CLUTCH HOUSING

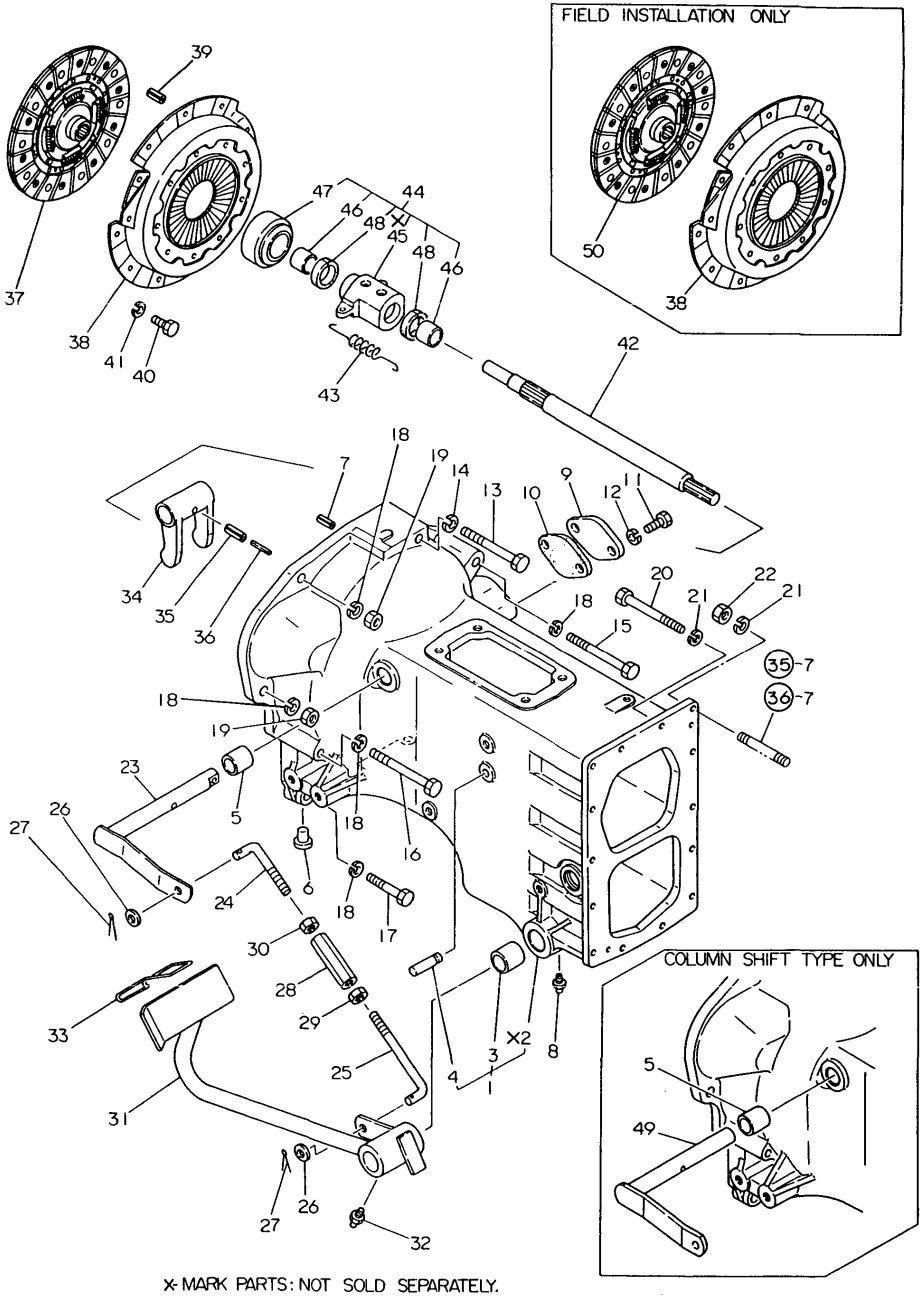

X-MARK PARTS: NOT SOLD SEPARATELY.

0CT10-G22801

34. CLUTCH HOUSING

(A)=YM186 (FLOOR (D)=YM186D(COLUM
(B)=YM186D(FLOOR (E)=
(C)=YM186 (COLUM (F)=

REF.	LEV.	PARTS NO.	DESCRIPTION	Q'TY (A)	(B)	(C)	(D)	(E)	(F)	I	R
	(A=T/# 00909)	(B=T/# 02372)	(C=T/# 20991) (D=T/# 42957)								
35	1	22351-060032	SPRING PIN 6X32	1	1	1	1				
36	1	22351-035032	SPRING PIN 3.5X32	1	1	1	1				
37	1	194340-21400	DISC, CLUTCH	1	1	1	1				
37-2	1	194500-21400	DISC, CLUTCH	1	1	1	1			N	
	(A=T/# 00509)	(B=T/# 01201)	(C=T/# 20101) (D=T/# 40161)								
37-3	1	194357-21400	DISC, CLUTCH	1	1	1	1			N	
	(A=T/# 00894)	(B=T/# 02355)	(C=T/# 20991) (D=T/# 42957)								
38	1	194340-21700	PLATE ASSY, PRESSURE	1	1	1	1				
39-1	1	22351-080018	SPRING PIN 8X18	2	2	2	2				
40-1	1	26116-080162	BOLT M 8X 16 PLATED	6	6	6	6				
40-2	1	26013-080162	BOLT W/WASHER M8X16	6	6	6	6			N	
	(A=*)	(B=*)	(C=*) (D=*)								
40-3	1	26106-080162	BOLT M 8X 16 PLATED	6	6	6	6			N	
	(A=T/# 00909)	(B=T/# 02372)	(C=T/# 20991) (D=T/# 42957)								
41	1	22217-080000	SPRING WASHER 8	6	6	6	6			Z	
	(A=*)	(B=*)	(C=*) (D=*)								
42	1	194446-22110	SHAFT, MAIN DRIVE	1	1	1	1				
43	1	194150-22240	SPRING, RETURN	2	2	2	2				
44	1	794150-22150	SLEEVE ASSY, BEARING	1	1	1	1				
45	2	194150-22220	SLEEVE, BEARING	1	1	1	1				
46	2	194150-22160	BUSH 22X28X22	2	2	2	2				
47	2	194990-42710	BEARING, CLUTCH	1	1	1	1				
48	2	194130-22170	FELT	2	2	2	2				
49	1	194500-22330-X	SHAFT,CLUTCH RELEASE			1	1			W	
			(C=FROM 1ST) (D=FROM 1ST)								
50	1	194340-21410	DISC, CLUTCH	1	1	1	1				1
50-1	1	194500-21410	DISC, CLUTCH	1	1	1	1			N	1
	(A=*1981.02)	(B=*1981.02)	(C=*1981.02) (D=*1981.02)								

N:Old $\frac{\text{Yes}}{\text{No}}$ New, Q:Old $\frac{\text{No}}{\text{Yes}}$ New, R:Old $\frac{\text{Yes}}{\text{Yes}}$ New, S:Old $\frac{\text{No}}{\text{No}}$ New, W:Add, Z:Discontinued, F:Interchangeable by set, K:Q'ty Change

(C)Copy Rights YANMAR CO.,LTD.

Fig.35. TRANSMISSION HOUSING(EX.ENGLAN

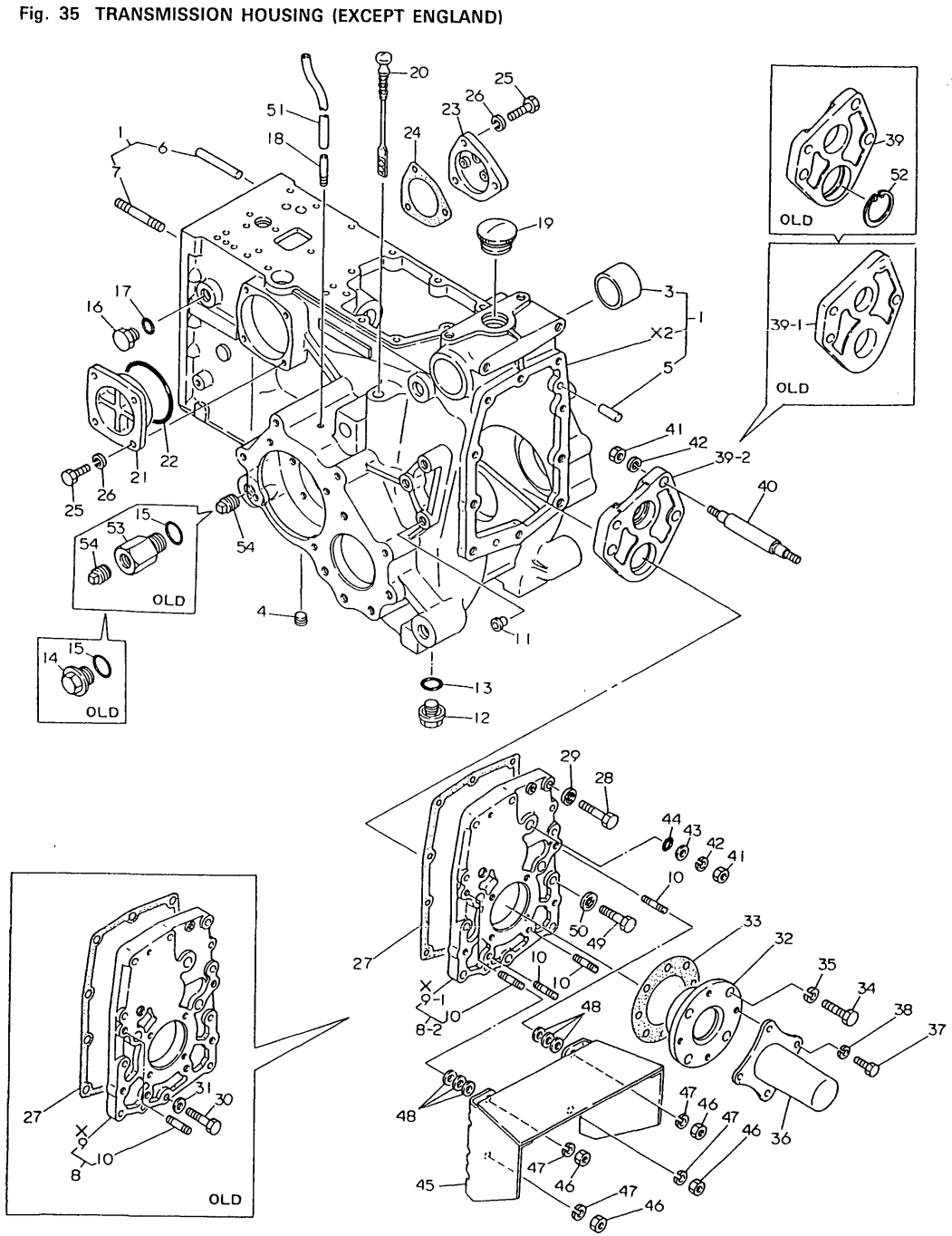

35. TRANSMISSION HOUSING(EX.ENGLAN

(A)=YM186 (FLOOR (D)=YM186D(COLUM
(B)=YM186D(FLOOR (E)=
(C)=YM186 (COLUM (F)=

REF.	LEV.	PARTS NO.	DESCRIPTION	Q'TY (A)	(B)	(C)	(D)	(E)	(F)	I	R
1	1	194446-24100-X	HOUSING,TRNNSMISSION	1	1		1				
1-1	1	194446-24101-X	HOUSING,TRANSMISSION	1	1		1			S	1
	(A=T/# 00419)	(B=T/# 01213)	(D=T/# 40187)								
1-2	1	194446-24102-X	HOUSING,TRANSMISSION	1	1	1	1			N	
	(A=T/# 00453)	(B=T/# 01253)	(D=T/# 40218)								
3	2	194300-24130	BUSH 45X50X30	2	2	2	2				
4	2	194151-36670	PLUG PT02	2	2	2	2				
5	2	22312-100200	PARALLEL PIN 10X20	2	2	2	2				
6	2	22312-100700	PARALLEL PIN 10X70	2	2	2	2				
7	2	26216-080752	STUD M 8X 75 PLATED	4	4	4	4				
8-1	1	194446-24820-X	COVER ASSY, REAR	1	1		1				
8-2	1	194446-24821-X	COVER ASSY, REAR	1	1	1	1			S	1
	(A=T/# 00419)	(B=T/# 01213)	(D=T/# 40187)								
10	2	26216-100252	STUD M10 25	6	6	6	6				
11-1	1	194150-21910	PLUG 11.2	6	6	6	6				
12	1	194151-24770	PLUG 14, OIL	2	2	2	2				
12-1	1	23491-140002	PLUG 14	2	2	2	2			N	
	(A=T/# 00860)	(B=T/# 02189)	(C=T/# 20967) (D=T/# 42882)								
13	1	24311-000160	O-RING 1A P-16.0	2	2	2	2				
14	1	1E6140-53070	PLUG M24	1	1		1			Z	
	(A=T/# 00419)	(B=T/# 01213)	(D=T/# 40187)								
15	1	24341-000290	O-RING 1A S-29.0	1	1		1			Z	
	(A=T/# 00453)	(B=T/# 01253)	(D=T/# 40218)								
16	1	194464-45920	PLUG 3/4-16UNF	1	1	1	1				
17	1	194464-45930	O-RING 8-1	1	1	1	1				
18	1	194145-36651	BREATHER, AIR	2	2	2	2				
19	1	194990-75170	CAP 35	1	1	1	1				
20	1	194440-24810	DIPSTICK	1	1	1	1				
21	1	194300-24750-X	COVER, STRAINER	1	1	1	1				
22	1	24325-000850	O-RING 1B G-85.0	1	1	1	1				
23	1	194300-24760-X	COVER, STRAINER	1	1	1	1				
24	1	194300-24770	GASKET	1	1	1	1				
25	1	26116-080202	BOLT M 8X 20 PLATED	7	7	7	7				
26	1	22217-080000	SPRING WASHER 8	7	7	7	7				
27	1	194300-24840	GASKET	1	1	1	1				
28	1	26116-100352	BOLT M10X 35 PLATED	9	9		9				
28-1	1	26116-100352	BOLT M10X 35 PLATED	5	5	5	5			K	1
	(A=T/# 00419)	(B=T/# 01213)	(D=T/# 40187)								
29	1	1E6141-53160	WASHER, SEAL	10	10		10				
29-1	1	1E6141-53160	WASHER, SEAL	5	5	5	5			K	1
	(A=T/# 00419)	(B=T/# 01213)	(D=T/# 40187)								
30	1	194320-42150	BOLT M10X 35	1	1		1			Z	1
	(A=T/# 00419)	(B=T/# 01213)	(D=T/# 40187)								
31	1	194274-13570	SPRING WASHER 10	1	1		1			Z	1
	(A=T/# 00419)	(B=T/# 01213)	(D=T/# 40187)								
32	1	194300-24880-X	RETAINER	1	1	1	1				
33	1	194300-24890	GASKET	1	1	1	1				
34	1	26116-080202	BOLT M 8X 20 PLATED	4	4	4	4				
35	1	22217-080000	SPRING WASHER 8	4	4	4	4				
36	1	194300-24651-X	COVER, P.T.O. SHAFT	1	1	1	1				
37	1	26116-060082	BOLT M 6X 8 PLATED	4	4	4	4				

N:Old $\overset{\text{Yes}}{\underset{\text{No}}{\leftrightarrow}}$ New, Q:Old $\overset{\text{No}}{\underset{\text{Yes}}{\leftrightarrow}}$ New, R:Old $\overset{\text{Yes}}{\underset{\text{Yes}}{\leftrightarrow}}$ New, S:Old $\overset{\text{No}}{\underset{\text{No}}{\leftrightarrow}}$ New, W:Add, Z:Discontinued, F:Interchangeable by set, K:Q'ty Change

++ CONTINUE ++

(C)Copy Rights YANMAR CO.,LTD.

Fig.35. TRANSMISSION HOUSING(EX.ENGLAN

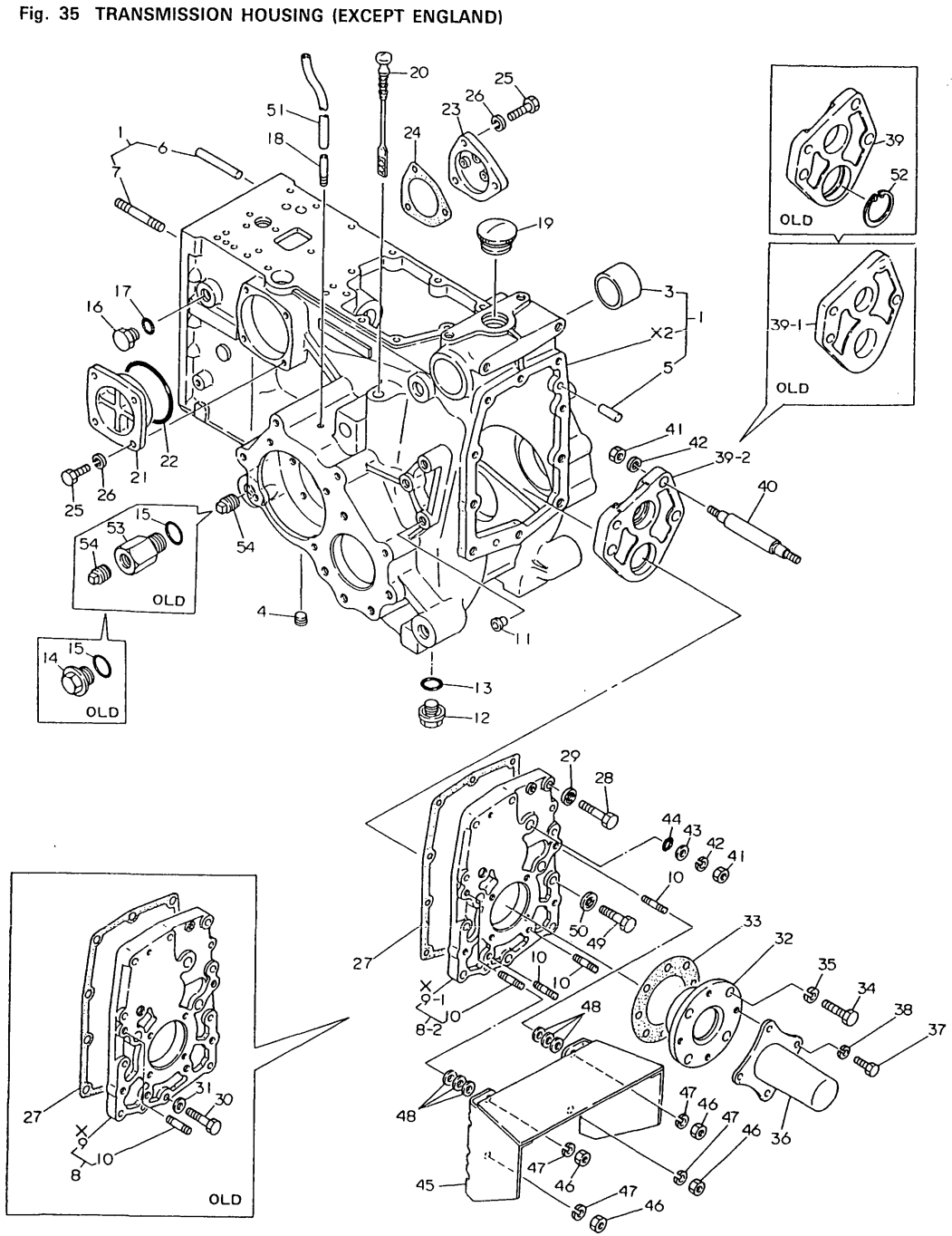

35. TRANSMISSION HOUSING(EX.ENGLAN

(A)=YM186 (FLOOR
(B)=YM186D(FLOOR
(C)=YM186 (COLUM
(D)=YM186D(COLUM
(E)=
(F)=

REF.	LEV.	PARTS NO.	DESCRIPTION	Q'TY (A)	(B)	(C)	(D)	(E)	(F)	I	R
38	1	22217-060000	SPRING WASHER 6	4	4	4	4				
39	1	194300-24850	PLATE, P.T.O.	1	1						
39-1	1	194300-24851	PLATE, P.T.O.	1	1		1			S	
	(A=T/# 00415)	(B=T/# 01046)									
39-2	1	194446-24850	PLATE, P.T.O.	1	1	1	1			S	
	(A=T/# 00419)	(B=T/# 01190)	(D=T/# 40162)								
40-1	1	194446-24860	SUPPORT, P.T.O.	3	3	3	3				
41-1	1	26736-120002	NUT M12	6	6	6	6				
42-1	1	22217-120000	WASHER 12,SPRING	6	6	6	6				
43-1	1	194300-24870	WASHER	3	3	3	3				
44-1	1	24341-000120	O-RING 1A S-12.0	3	3	3	3				
45	1	194446-26910-X	GUARD, P.T.O. SHAFT	1	1	1	1				
45-1	1	194448-26910-X	GUARD, P.T.O. SHAFT	1	1	1	1			N	
	(A=T/# 00860)	(B=T/# 02184)	(C=T/# 20958) (D=T/# 42861)								
46	1	26716-100002	NUT M10	4	4	4	4				
47	1	22217-100000	SPRING WASHER 10	4	4	4	4				
48	1	22137-100000	WASHER 10,POLISHED	10	10	10	10				
48-1	1	22137-100000	WASHER 10,POLISHED	6	6	6	6			K	
	(A=*)	(B=*)	(C=*) (D=*)								
49	1	26116-120352	BOLT M12X 35 PLATED	5	5	5	5			W	1
	(A=T/# 00419)	(B=T/# 01213)	(C=FROM 1ST) (D=T/# 40187)								
50	1	194446-24900	SEAL WASHER 12	5	5	5	5			W	1
	(A=T/# 00419)	(B=T/# 01213)	(C=FROM 1ST) (D=T/# 40187)								
51	1	23064-060450	PIPE 6X 450	2	2	2	2			W	
	(A=*)	(B=*)	(C=*) (D=*)								
51-1	1	23064-060450	PIPE 6X 450	2	2	2	2			Z	
	(A=*)	(B=*)	(C=*) (D=*)								
52	1	22252-000470	CIRCLIP 47	1	1		1			W	
	(A=T/# 00415)	(B=T/# 01046)	(D=FROM 1ST)								
52-1	1	22252-000470	CIRCLIP 47	1	1		1			Z	
	(A=T/# 00419)	(B=T/# 01190)	(D=T/# 40162)								
53	1	194446-24770-X	HOLDER	1	1		1			W	
	(A=T/# 00419)	(B=T/# 01213)	(D=T/# 40187)								
53-1	1	194446-24770-X	HOLDER	1	1		1			Z	
	(A=T/# 00453)	(B=T/# 01253)	(D=T/# 40218)								
54	1	194322-24980	PLUG 1/2-NPT	1	1	1	1			W	
	(A=T/# 00419)	(B=T/# 01213)	(C=FROM 1ST) (D=T/# 40187)								

N:Old $\xleftarrow[\text{No}]{\text{Yes}}$ New, Q:Old $\xleftarrow[\text{Yes}]{\text{No}}$ New, R:Old $\xleftarrow[\text{Yes}]{\text{Yes}}$ New, S:Old $\xleftarrow[\text{No}]{\text{No}}$ New, W:Add, Z:Discontinued, F:Interchangeable by set, K:Q'ty Change

(C)Copy Rights YANMAR CO.,LTD.

Fig.36. TRANSMISSION HOUSING(ENGLAND)

Fig. 36 TRANSMISSION HOUSING (ENGLAND)

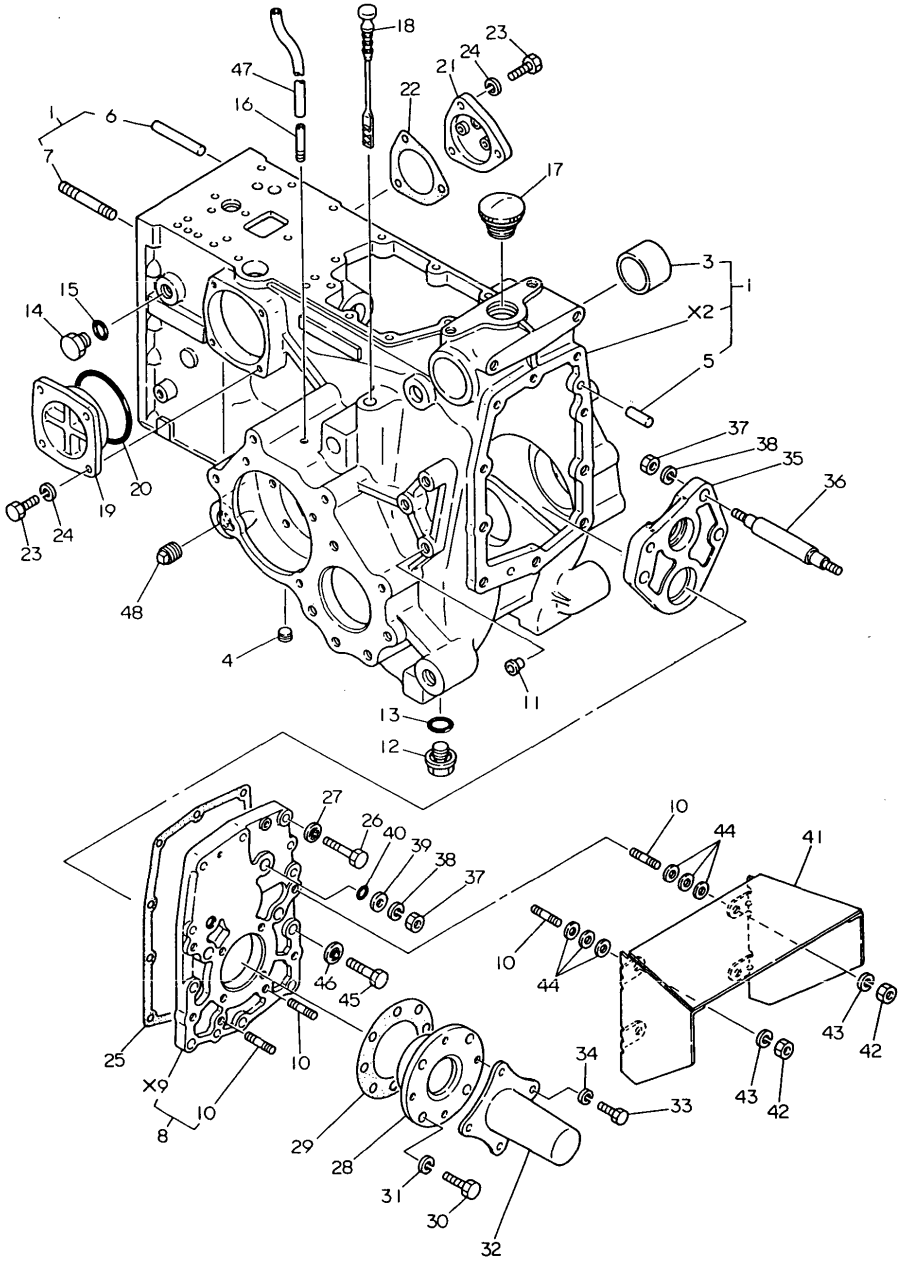

X-MARK PARTS : NOT SOLD SEPARATELY.

36. TRANSMISSION HOUSING(ENGLAND)

(A)=YM186 (FLOOR (D)=YM186D(COLUM
(B)=YM186D(FLOOR (E)=
(C)=YM186 (COLUM (F)=

REF.	LEV.	PARTS NO.	DESCRIPTION	Q'TY (A)	(B)	(C)	(D)	(E)	(F)	I	R
1	1	194446-24102-X	HOUSING,TRANSMISSION	1	1	1	1				
3	2	194300-24130	BUSH 45X50X30	2	2	2	2				
4	2	194151-36670	PLUG PT02	2	2	2	2				
5	2	22312-100200	PARALLEL PIN 10X20	2	2	2	2				
6	2	22312-100700	PARALLEL PIN 10X70	2	2	2	2				
7	2	26216-080752	STUD M 8X 75 PLATED	4	4	4	4				
8	1	194446-24821-X	COVER ASSY, REAR	1	1	1	1				
10	2	26216-100252	STUD M10 25	6	6	6	6				
11	1	194150-21910	PLUG 11.2	6	6	6	6				
12	1	194151-24770	PLUG 14, OIL	2	2	2	2				
12-1	1	23491-140002	PLUG 14	2	2	2	2			N	
	(A=T/# 00860)	(B=T/# 02189)	(C=T/# 20967)	(D=T/# 42882)							
13	1	24311-000160	O-RING 1A P-16.0	2	2	2	2				
14	1	194464-45920	PLUG 3/4-16UNF	1	1	1	1				
15	1	194464-45930	O-RING 8-1	1	1	1	1				
16	1	194145-36651	BREATHER, AIR	2	2	2	2				
17	1	194990-75170	CAP 35	1	1	1	1				
18	1	194440-24810	DIPSTICK	1	1	1	1				
19	1	194300-24750-X	COVER, STRAINER	1	1	1	1				
20	1	24325-000850	O-RING 1B G-85.0	1	1	1	1				
21	1	194300-24760-X	COVER, STRAINER	1	1	1	1				
22	1	194300-24770	GASKET	1	1	1	1				
23	1	26116-080202	BOLT M 8X 20 PLATED	7	7	7	7				
24	1	22217-080000	SPRING WASHER 8	7	7	7	7				
25	1	194300-24840	GASKET	1	1	1	1				
26	1	26116-100352	BOLT M10X 35 PLATED	5	5	5	5				
27	1	1E6141-53160	WASHER, SEAL	5	5	5	5				
28	1	194300-24880-X	RETAINER	1	1	1	1				
29	1	194300-24890	GASKET	1	1	1	1				
30	1	26116-080202	BOLT M 8X 20 PLATED	4	4	4	4				
31	1	22217-080000	SPRING WASHER 8	4	4	4	4				
32	1	194300-24651-X	COVER, P.T.O. SHAFT	1	1	1	1				
33	1	26116-060082	BOLT M 6X 8 PLATED	4	4	4	4				
34	1	22217-060000	SPRING WASHER 6	4	4	4	4				
35	1	194446-24850	PLATE, P.T.O.	1	1	1	1				
36	1	194446-24860	SUPPORT, P.T.O.	3	3	3	3				
37	1	26736-120002	NUT M12	6	6	6	6				
38	1	22217-120000	WASHER 12,SPRING	6	6	6	6				
39	1	194300-24870	WASHER	3	3	3	3				
40	1	24341-000120	O-RING 1A S-12.0	3	3	3	3				
41	1	194448-26910-X	GUARD, P.T.O. SHAFT	1	1	1	1				
42	1	26716-100002	NUT M10	4	4	4	4				
43	1	22217-100000	SPRING WASHER 10	4	4	4	4				
44	1	22137-100000	WASHER 10,POLISHED	6	6	6	6				
45	1	26116-120352	BOLT M12X 35 PLATED	5	5	5	5				
46	1	194446-24900	SEAL WASHER 12	5	5	5	5				
47	1	23064-060450	PIPE 6X 450	2	2	2	2			Z	
	(A=*)	(B=*)	(C=*)	(D=*)							
48	1	194322-24980	PLUG 1/2-NPT	1	1	1	1				

N:Old $\frac{\text{Yes}}{\text{No}}$ New, Q:Old $\frac{\text{No}}{\text{Yes}}$ New, R:Old $\frac{\text{Yes}}{\text{Yes}}$ New, S:Old $\frac{\text{No}}{\text{No}}$ New, W:Add, Z:Discontinued, F:Interchangeable by set, K:Q'ty Change

(C)Copy Rights YANMAR CO.,LTD.

Fig.37. CENTER PLATE

Fig. 37 CENTER PLATE

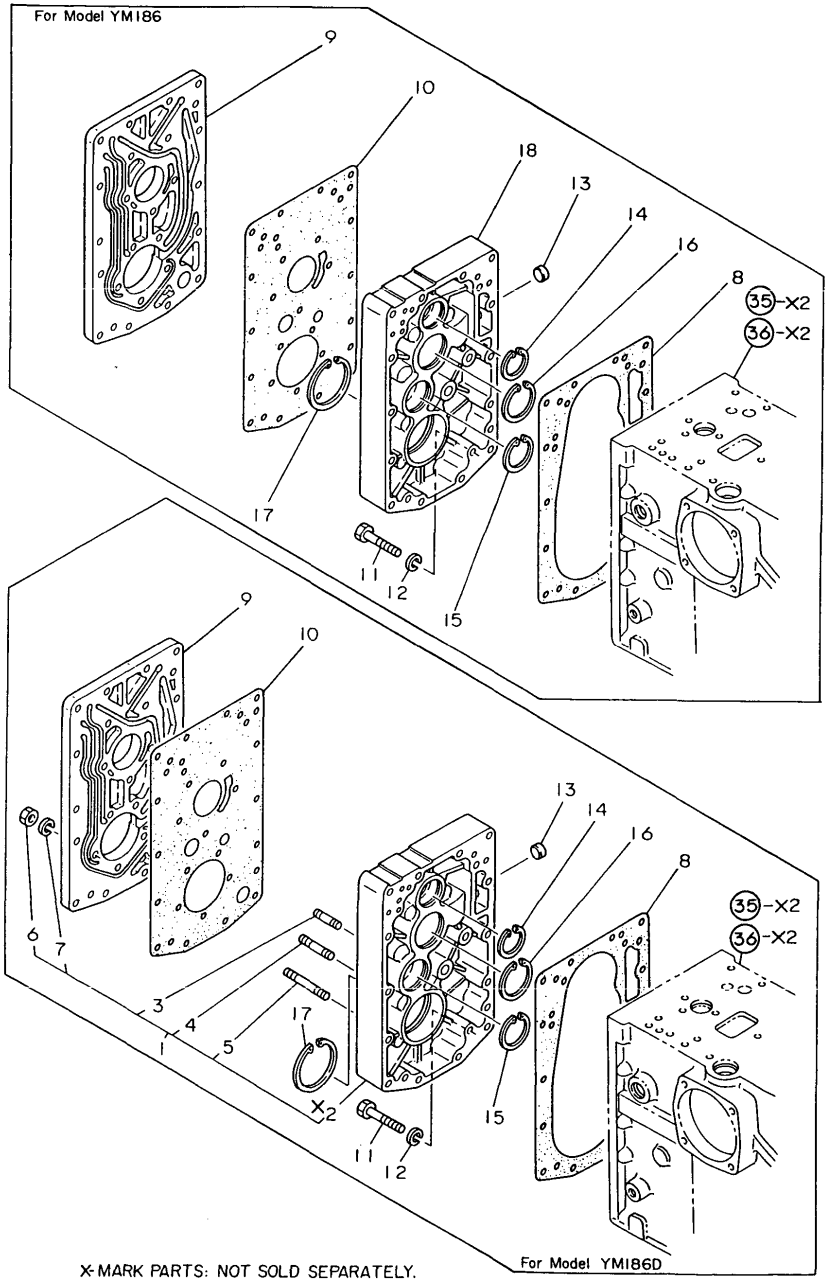

X-MARK PARTS: NOT SOLD SEPARATELY.

0CT10-G22801 37. CENTER PLATE

(A)=YM186 (FLOOR (D)=YM186D(COLUM
(B)=YM186D(FLOOR (E)=
(C)=YM186 (COLUM (F)=

REF.	LEV.	PARTS NO.	DESCRIPTION	Q'TY (A)	(B)	(C)	(D)	(E)	(F)	I	R
1	1	194441-24150-X	PLATE ASSY, CENTER		1		1				
3	2	26216-080352	STUD M 8X 35 PLATED		3		3				
4	2	26216-080452	STUD M 8X 45 PLATED		1		1				
5	2	26216-080602	STUD M 8X 60 PLATED		1		1				
6	2	26716-080002	NUT M 8		5		5				
7	2	22217-080000	SPRING WASHER 8		5		5				
8	1	194300-24180	GASKET	1	1	1	1				
9	1	194300-24200-X	PLATE, OIL LINE	1	1	1	1				
10	1	194300-24210	GASKET, OIL PLATE	1	1	1	1				
11	1	26116-080552	BOLT M 8X 55 PLATED	1	1	1	1				
12	1	22217-080000	SPRING WASHER 8	1	1	1	1				
13	1	194130-27390	CAP 15X5, SEAL	1	1	1	1				
13-1	1	27260-150000	COVER 15, BLIND	1	1	1	1				R
	(A=T/#00860)	(B=T/# 02306)	(C=T/# 20984) (D=T/# 42152)								
14	1	22252-000350	CIRCLIP 35	1	1	1	1				
15	1	22252-000420	CIRCLIP 42	1	1	1	1				
16	1	22252-000470	CIRCLIP 47	1	1	1	1				
17	1	22252-000620	CIRCLIP 62(H)	1	1	1	1				
18	1	194440-24260-X	PLATE, CENTER	1		1					

N:Old $\xleftarrow[\text{No}]{\text{Yes}}$ New, Q:Old $\xleftarrow[\text{Yes}]{\text{No}}$ New, R:Old $\xleftarrow[\text{Yes}]{\text{Yes}}$ New, S:Old $\xleftarrow[\text{No}]{\text{No}}$ New, W:Add, Z:Discontinued, F:Interchangeable by set, K:Q'ty Change

(C)Copy Rights YANMAR CO.,LTD.

Fig.38. POWER SHIFT PUMP

Fig. 38 POWER SHIFT PUMP

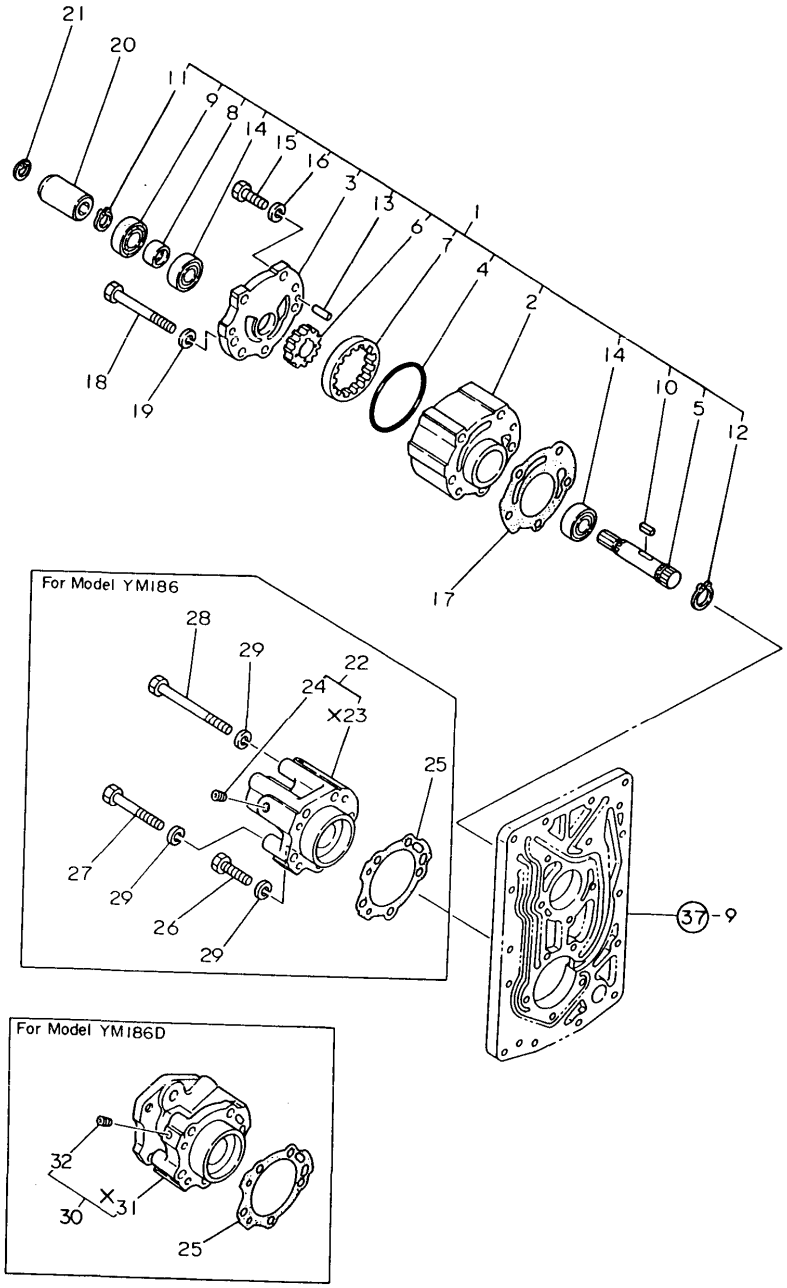

38. POWER SHIFT PUMP

(A)=YM186 (FLOOR (D)=YM186D(COLUM
(B)=YM186D(FLOOR (E)=
(C)=YM186 (COLUM (F)=

REF.	LEV.	PARTS NO.	DESCRIPTION	Q'TY (A)	(B)	(C)	(D)	(E)	(F)	I	R
1	1	194446-24040	PUMP ASSY, P. SHIFT.	1	1	1	1				
2	2	194446-24300-X	CASE ASSY, REAR AXLE	1	1	1	1				
3	2	194300-24320	COVER, CASE	1	1	1	1				
4	2	24341-000750	O-RING 1A S-75.0	1	1	1	1				
5	2	194446-24290	SHAFT	1	1	1	1				
6	2	194300-24340	GEAR, DRIVE	1	1	1	1				
7	2	194300-24350	GEAR, INTERNAL	1	1	1	1				
8	2	194300-25180	SLEEVE 17X22X12	1	1	1	1				
9	2	194300-25190	SEAL TC22 35 8, OIL	1	1	1	1				
9-1	2	24423-223508	SEAL TC22 35 08, OIL	1	1	1	1				R
	(A=T/# 00815)	(B=T/# 02021)	(C=T/# 20956)	(D=T/# 42765)							
10	2	1E6190-55120	KEY 5X5X15	1	1	1	1				
11	2	22242-000170	CIRCLIP 17	2	2	2	2				
12	2	22242-000190	CIRCLIP 19	1	1	1	1				
13	2	22312-080200	PARALLEL PIN 8X20	2	2	2	2				
14	2	24101-060034	BALL BEARING	2	2	2	2				
15	2	26116-080252	BOLT M 8X 25 PLATED	2	2	2	2				
16	2	22217-080000	SPRING WASHER 8	2	2	2	2				
17	1	194300-24310	GASKET	1	1	1	1				
18	1	26116-080852	BOLT M 8X 85 PLATED	5	5	5	5				
19	1	22217-080000	SPRING WASHER 8	5	5	5	5				
20	1	194300-25100	COUPLING	1	1	1	1				
21	1	22252-000150	CIRCLIP 15	1	1	1	1				
22	1	194300-24400	CASE ASSY, SEAL	1		1					
24	2	23873-010000	PLUG PT 1/8	4		4					
25	1	194301-24420	GASKET	1	1	1	1				
26	1	26116-080352	BOLT M 8X 35	1		1					
27	1	26116-080652	BOLT M 8X 65 PLATED	2		2					
28	1	26116-081002	BOLT M 8X100 PLATED	2		2					
29	1	22217-080000	SPRING WASHER 8	5		5					
30	1	194301-24400	CASE ASSY, SEAL		1		1				
32	2	23871-010000	PLUG PT1/8,SCREW		4		4				

N:Old $\overset{\text{Yes}}{\underset{\text{No}}{\leftrightarrow}}$ New, Q:Old $\overset{\text{No}}{\underset{\text{Yes}}{\leftrightarrow}}$ New, R:Old $\overset{\text{Yes}}{\underset{\text{Yes}}{\leftrightarrow}}$ New, S:Old $\overset{\text{No}}{\underset{\text{No}}{\leftrightarrow}}$ New, W:Add, Z:Discontinued, F:Interchangeable by set, K:Q'ty Change

(C)Copy Rights YANMAR CO.,LTD.

Fig.39. REGULATOR

Fig. 39 REGULATOR

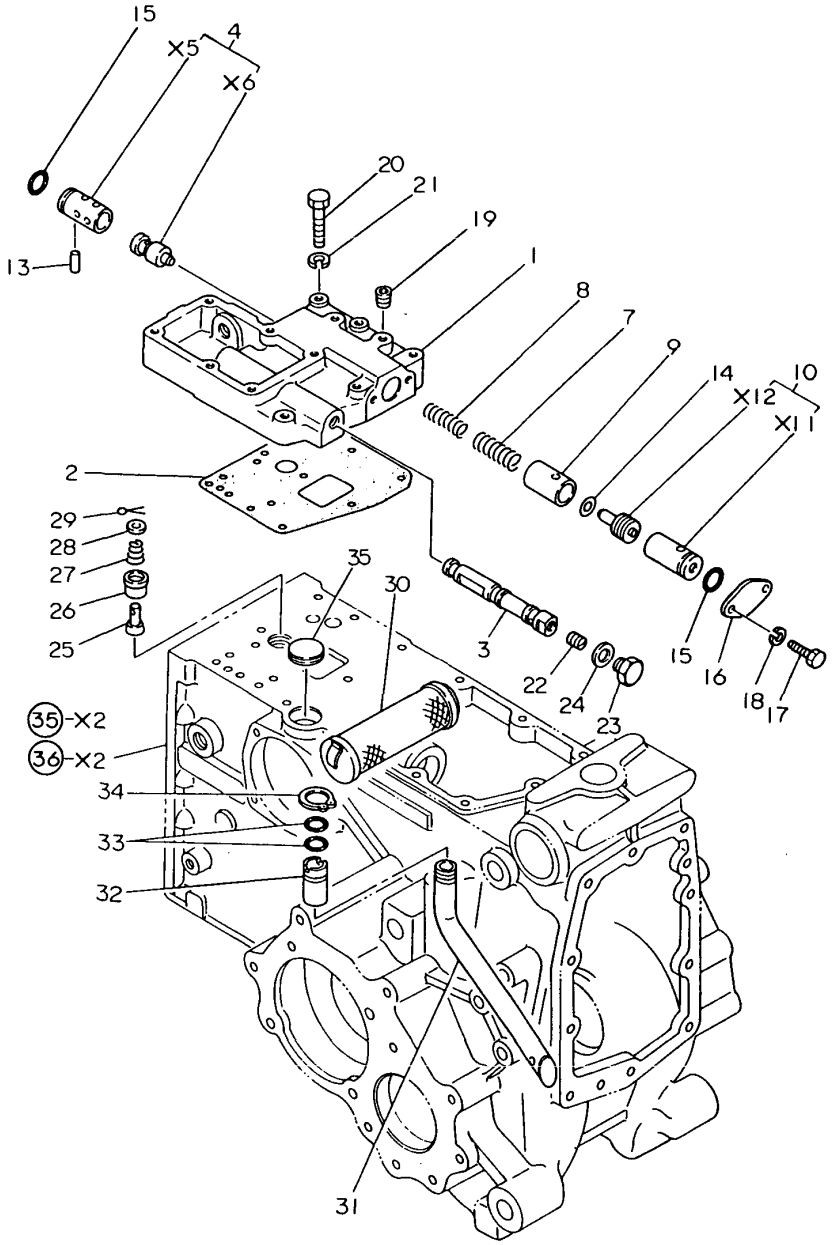

0CT10-G22801

39. REGULATOR

(A)=YM186 (FLOOR (D)=YM186D(COLUM
(B)=YM186D(FLOOR (E)=
(C)=YM186 (COLUM (F)=

REF.	LEV.	PARTS NO.	DESCRIPTION	Q'TY (A)	(B)	(C)	(D)	(E)	(F)	I	R
1	1	194446-24500-X	CASE, REGULATOR	1	1	1	1				
2	1	194300-24511	GASKET, REGULATOR	1	1	1	1				
3	1	194310-24520	SPOOL, VALVE	1	1	1	1				
4	1	194446-24560	VALVE ASSY, RELIEF	1	1	1	1				
4-1	1	194446-24561	VALVE ASSY, RELIEF	1	1	1	1			N	
	(A=*1981.)	(B=*1981.)	(C=*1981.) (D=*1981.)								
7	1	194446-24540	SPRING, RELIEF	1	1	1	1				
8	1	194446-24550	SPRING, RELIEF	1	1	1	1				
9	1	194446-24580	HOLDER, SPRING	1	1	1	1				
10	1	194446-24630	VALVE ASSY, DRV	1	1	1	1				
13	1	194446-24610	PARALLEL PIN	1	1	1	1				
14	1	194446-24620	SHIM T=0.5	2	2	2	2				
15	1	24341-000224	O-RING 1A S-22.4	2	2	2	2				
16	1	194300-24571-X	PLATE, END	1	1	1	1				
17	1	26116-060122	BOLT M 6X 12	2	2	2	2				
18	1	22217-060000	SPRING WASHER 6	2	2	2	2				
19	1	23871-010000	PLUG PT1/8,SCREW	2	2	2	2				
20	1	26116-080452	BOLT M 8X 45 PLATED	5	5	5	5				
21	1	22217-080000	SPRING WASHER 8	5	5	5	5				
22	1	26911-080082	SCREW M 8X 8	1	1	1	1				
23	1	194310-24660	PLUG M18	1	1	1	1				
24	1	23414-180000	GASKET 18, ROUND	1	1	1	1				
25	1	1E6190-55660	VALVE, 2ND RELIEF	1	1	1	1				
26	1	1E6190-55710	SEAT, 2ND RELIEF	1	1	1	1				
27	1	194310-24770	SPRING	1	1	1	1				
28	1	22117-060000	WASHER 6	1	1	1	1				
29	1	22417-200100	COTTER PIN 2.0X10	1	1	1	1				
30	1	194300-24700	STRAINER, OIL	1	1	1	1				
31	1	194440-24950	PIPE, SUCTION	1	1	1	1				
32	1	194300-24970	CONNECTOR	1	1	1	1				
33	1	24311-000200	O-RING 1A P-20.0	2	2	2	2				
34	1	22242-000240	CIRCLIP 24	1	1	1	1				
35	1	194300-24980	PLUG 35	1	1	1	1				

N:Old $\frac{\text{Yes}}{\text{No}}$ New, Q:Old $\frac{\text{No}}{\text{Yes}}$ New, R:Old $\frac{\text{Yes}}{\text{Yes}}$ New, S:Old $\frac{\text{No}}{\text{No}}$ New, W:Add, Z:Discontinued, F:Interchangeable by set, K:Q'ty Change

(C)Copy Rights YANMAR CO.,LTD.

Fig.40. MAIN DRIVE GEARS

Fig. 40 MAIN DRIVE GEARS

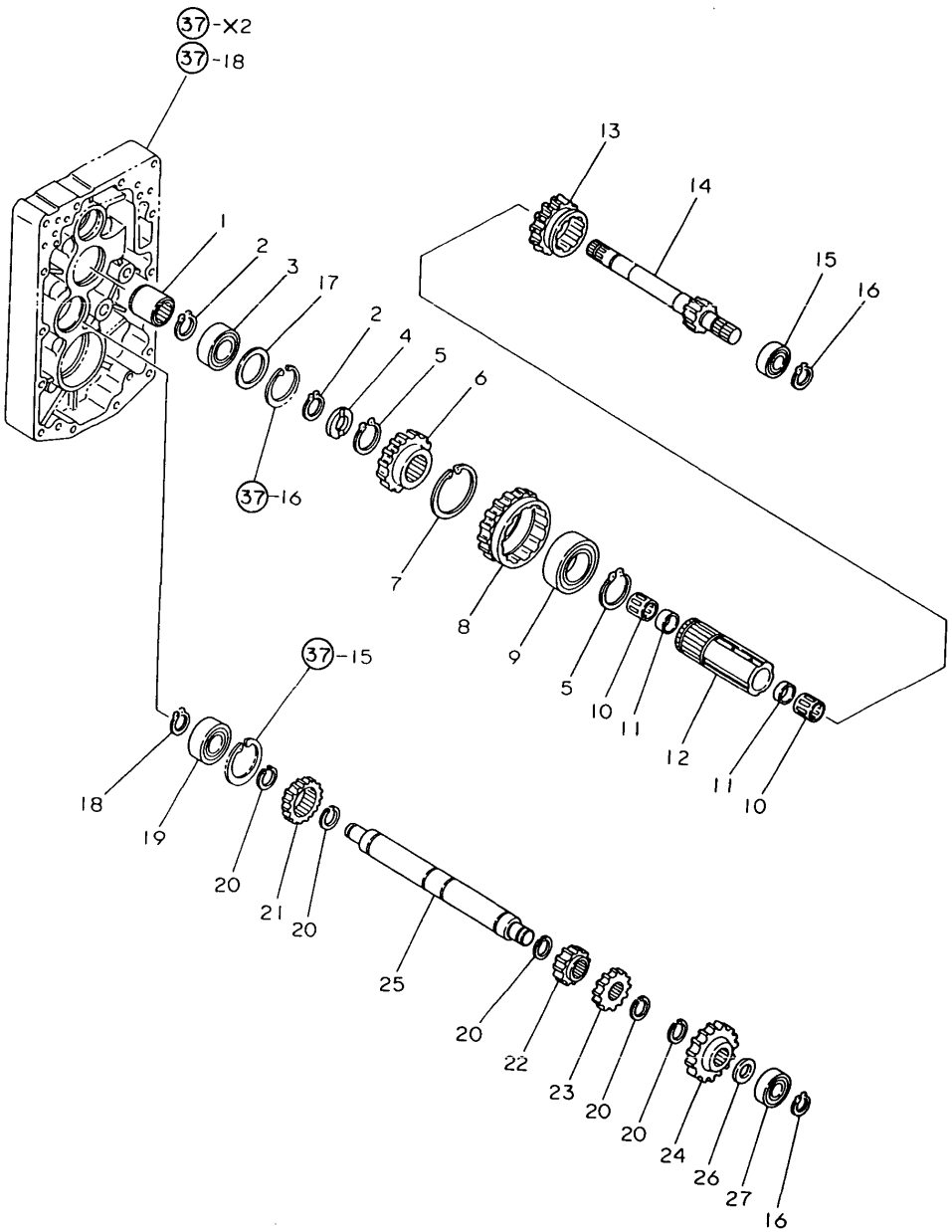

0CT10-G22801

40. MAIN DRIVE GEARS

(A)=YM186 (FLOOR (D)=YM186D(COLUM
(B)=YM186D(FLOOR (E)=
(C)=YM186 (COLUM (F)=

REF.	LEV.	PARTS NO.	DESCRIPTION	Q'TY (A)	(B)	(C)	(D)	(E)	(F)	I	R
1	1	194310-25050	COUPLING	1	1	1	1				
2	1	22242-000190	CIRCLIP 19	2	2	2	2				
3	1	194446-25160	BALL BEARING, ANGULA	1	1	1	1				
3-1	1	24512-052044	BALL BEARING	1	1	1	1			R	
	(A=T/# 00730)	(B=T/# 01652)	(C=T/# 20858)	(D=T/# 42030)							
4	1	194446-25230	WASHER 20X32X4	1	1	1	1				
5	1	22242-000340	CIRCLIP 34	2	2	2	2				
6	1	194440-25150	GEAR, MAIN	1	1	1	1				
7	1	22252-000620	CIRCLIP 62(H)	1	1	1	1				
8	1	194440-25120	GEAR, MAIN	1	1	1	1				
9	1	24101-060074	BALL BEARING	1	1	1	1				
10	1	194440-25290	NEEDLE BEARING	2	2	2	2				
11	1	194440-25280	COLLAR 21.6X26X4	2	2	2	2				
12	1	194440-25260	PIPE, SPLINE	1	1	1	1				
13	1	194440-25130	GEAR, SLIDE	1	1	1	1				
14	1	194446-25110	SHAFT, MAIN	1	1	1	1				
15	1	24101-060034	BALL BEARING	1	1	1	1				
16	1	22242-000170	CIRCLIP 17	2	2	2	2				
17	1	194446-25170	COLLAR 35X47X2	1	1	1	1				
18	1	22242-000150	CIRCLIP 15	1	1	1	1				
19	1	194446-25450	BALL BEARING	1	1	1	1				
20	1	194440-25460	CIRCLIP 25	5	5	5	5				
21	1	194440-25420	GEAR, REDUCTION	1	1	1	1				
22	1	194440-25410	GEAR, REDUCTION	1	1	1	1				
23	1	194440-25430	GEAR, REDUCTION	1	1	1	1				
24	1	194440-25440	GEAR, REDUCTION	1	1	1	1				
25	1	194440-25400	SHAFT, REDUCTION	1	1	1	1				
26	1	194300-25470	WASHER 17X31X2	1	1	1	1				
27	1	24101-062034	BALL BEARING	1	1	1	1				

N:Old $\frac{\text{Yes}}{\text{No}}$ New, Q:Old $\frac{\text{No}}{\text{Yes}}$ New, R:Old $\frac{\text{Yes}}{\text{Yes}}$ New, S:Old $\frac{\text{No}}{\text{No}}$ New, W:Add, Z:Discontinued, F:Interchangeable by set, K:Q'ty Change

(C)Copy Rights YANMAR CO.,LTD.

Fig.41. SHAFT FOR POWER SHIFT CLUTCH

Fig. 41 SHAFT FOR POWER SHIFT CLUTCH

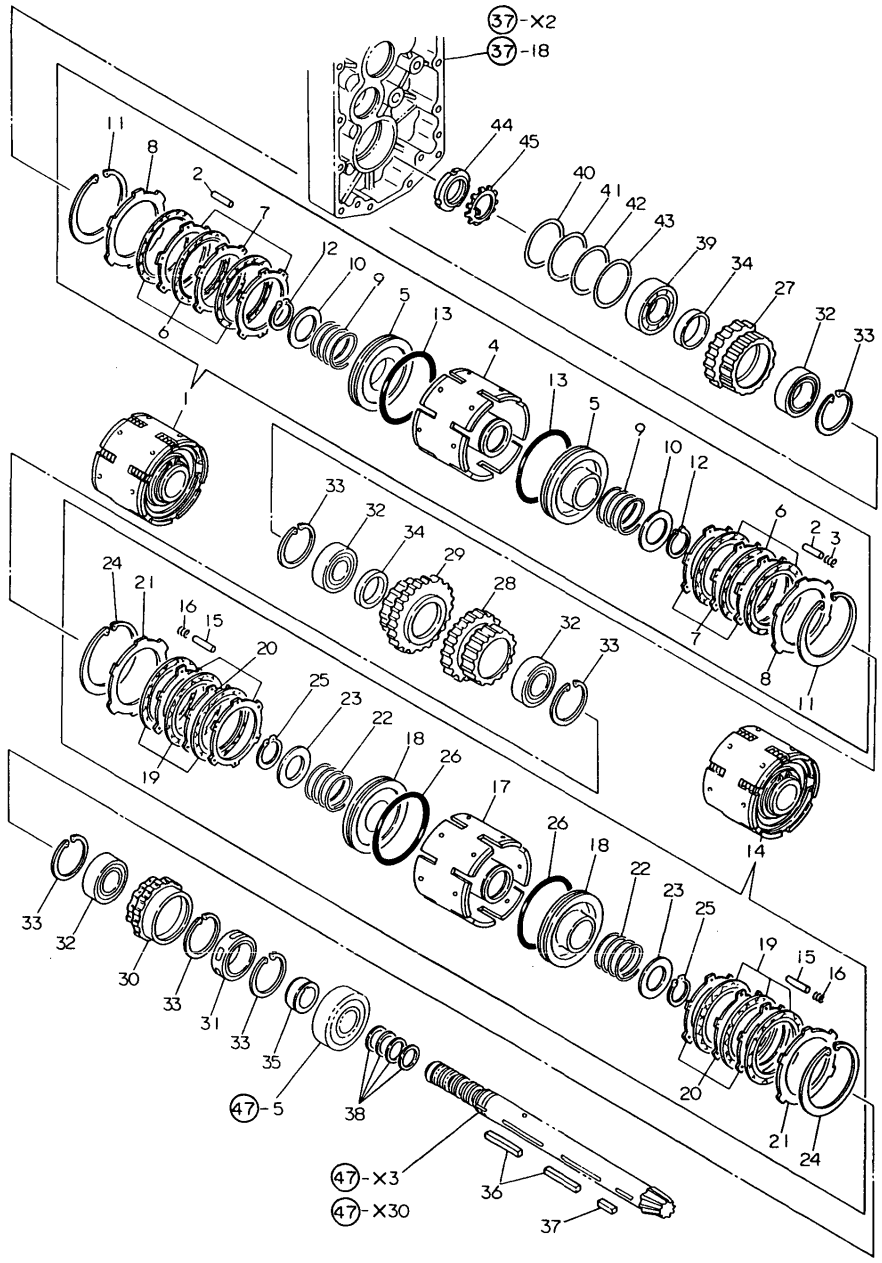

41. SHAFT FOR POWER SHIFT CLUTCH

(A)=YM186 (FLOOR (D)=YM186D(COLUM
(B)=YM186D(FLOOR (E)=
(C)=YM186 (COLUM (F)=

REF.	LEV.	PARTS NO.	DESCRIPTION	Q'TY (A)	(B)	(C)	(D)	(E)	(F)	I	R
1	1	794440-25400	CYLINDER ASSY,CLUTCH	1	1	1	1				
2	2	194310-25620	PIN 2X14.3	12	12	12	12				
3	2	194310-25630	SPRING, CLUTCH	18	18	10	10				
4	2	194440-25741	CYLINDER, CLUTCH	1	1	1	1				
5	2	194440-25751	PISTON, CLUTCH	2	2	2	2				
6	2	194300-25760	PLATE, FRICTION	6	6	6	6				
7	2	194300-25770	PLATE 1.6, STEEL	6	6	6	6				
8	2	194300-25780	PLATE 3.5, STEEL	2	2	2	2				
9	2	194300-25790	SPRING	2	2	2	2				
10	2	194440-25810	RETAINER, SPRING	2	2	2	2				
11	2	22252-000920	CIRCLIP 92	2	2	2	2				
12	2	22292-000400	CIRCLIP S-40	2	2	2	2				
13	2	24325-000850	O-RING 1B G-85.0	2	2	2	2				
14	1	794440-25410	CYLINDER ASSY,CLUTCH	1	1	1	1				
15	2	194310-25620	PIN 2X14.3	12	12	12	12				
16	2	194310-25630	SPRING, CLUTCH	36	36	36	36				
17	2	194440-25741	CYLINDER, CLUTCH	1	1	1	1				
18	2	194440-25751	PISTON, CLUTCH	2	2	2	2				
19	2	194300-25760	PLATE, FRICTION	6	6	6	6				
20	2	194300-25770	PLATE 1.6, STEEL	6	6	6	6				
21	2	194300-25780	PLATE 3.5, STEEL	2	2	2	2				
22	2	194300-25790	SPRING	2	2	2	2				
23	2	194440-25810	RETAINER, SPRING	2	2	2	2				
24	2	22252-000920	CIRCLIP 92	2	2	2	2				
25	2	22292-000400	CIRCLIP S-40	2	2	2	2				
26	2	24325-000850	O-RING 1B G-85.0	2	2	2	2				
27	1	194440-25680	GEAR, CLUTCH	1	1	1	1				
28	1	194440-25690	GEAR, CLUTCH	1	1	1	1				
28-1	1	194440-25691	GEAR, CLUTCH	1	1	1	1			N	
	(A=*1981.09)	(B=*1981.09)	(C=*1981.09) (D=*1981.09)								
29	1	194440-25700	GEAR, CLUTCH	1	1	1	1				
30	1	194440-25710	GEAR	1	1	1	1				
31	1	194310-25700	CLUTCH, 1-WAY	1	1	1	1				
32	1	24101-060064	BALL BEARING	4	4	4	4				
33	1	22262-000550	CIRCLIP R-55	6	6	6	6				
34	1	194300-25890	COLLAR 30X38X5	2	2	2	2				
35	1	194300-25730	SLEEVE	1	1	1	1				
36	1	194300-25820	KEY 5X5X61.5	2	2	2	2				
37	1	194300-25930	KEY 5X4X18	1	1	1	1				
38	1	194300-25830	SEAL RING 23273	4	4	4	4				
39	1	194446-25620	BALL BEARING	1	1	1	1				
40	1	194300-25860	SHIM T=0.1	2	2	2	2				1
41	1	194300-25870	SHIM T=0.3	2	2	2	2				1
42	1	194300-25880	SHIM T=0.5	1	1	1	1				1
43	1	194300-25960	SHIM T=1.0	1	1	1	1				1
44	1	24211-030002	LOCK NUT M30	1	1	1	1				
45	1	24231-030000	WASHER 30	1	1	1	1				

N:Old $\frac{\text{Yes}}{\text{No}}$ New, Q:Old $\frac{\text{No}}{\text{Yes}}$ New, R:Old $\frac{\text{Yes}}{\text{Yes}}$ New, S:Old $\frac{\text{No}}{\text{No}}$ New, W:Add, Z:Discontinued, F:Interchangeable by set, K:Q'ty Change

(C)Copy Rights YANMAR CO.,LTD.

Fig.42. RANGE SHIFT SHAFT

Fig. 42 RANGE SHIFT SHAFT

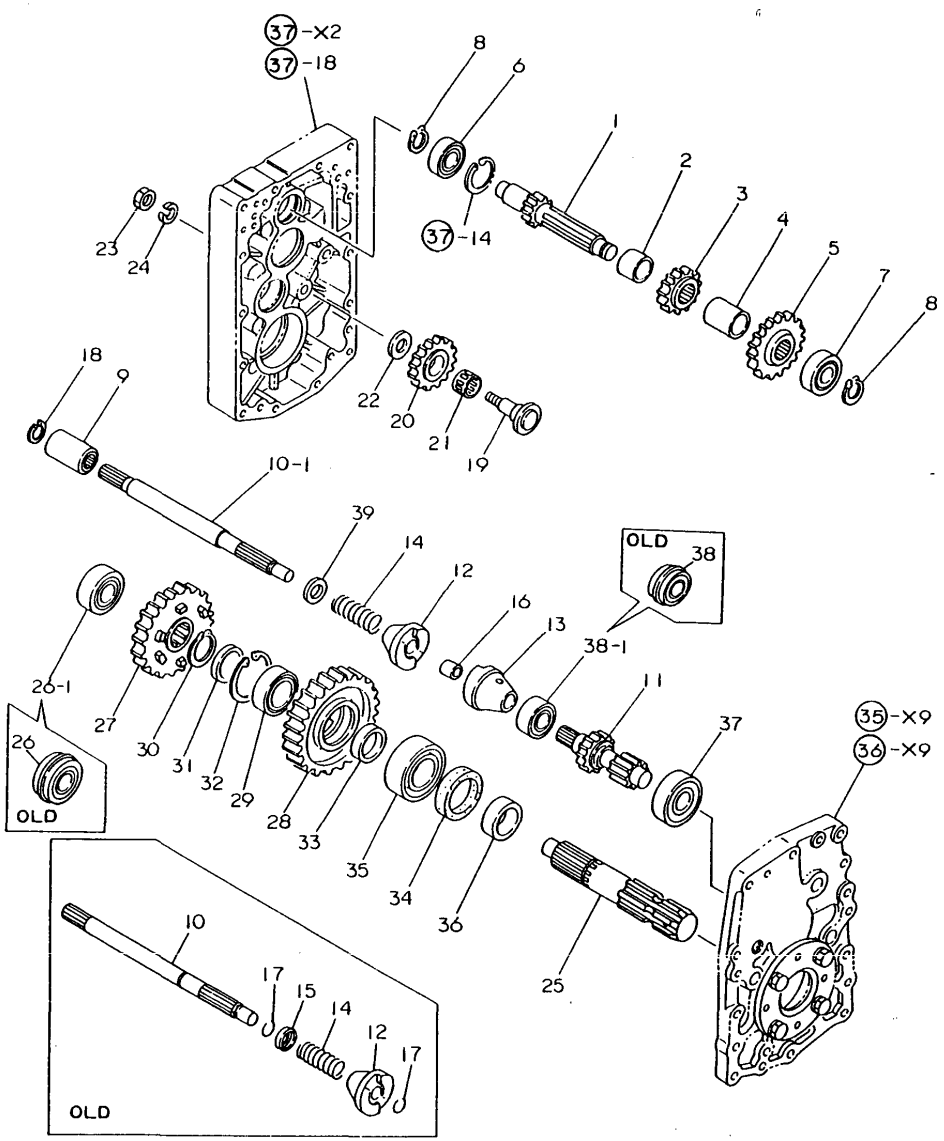

42. RANGE SHIFT SHAFT

(A)=YM186 (FLOOR (D)=YM186D(COLUM
(B)=YM186D(FLOOR (E)=
(C)=YM186 (COLUM (F)=

REF.	LEV.	PARTS NO.	DESCRIPTION	Q'TY (A)	(B)	(C)	(D)	(E)	(F)	I	R
1	1	194440-25300	SHAFT, COUNTER	1	1	1	1				
2	1	194440-25380	COLLAR 20X25.4X22.5	1	1	1	1				
3	1	194440-25350	GEAR, COUNTER	1	1	1	1				
4	1	194300-25390	COLLAR 20X25.4X29	1	1	1	1				
5	1	194440-25320	GEAR, COUNTER	1	1	1	1				
6	1	24101-060034	BALL BEARING	1	1	1	1				
7	1	24101-062034	BALL BEARING	1	1	1	1				
8	1	22242-000170	CIRCLIP 17	2	2	2	2				
9	1	194300-25100	COUPLING	1	1	1	1				
10	1	194446-25950	SHAFT, CONNECTING	1	1						
10-1	1	194446-25951	SHAFT, CONNECTING	1	1	1	1			N	
	(A=T/# 00217)	(B=T/# 00567)									
11	1	194446-26110	SHAFT, PTO PINION	1	1	1	1				
12	1	194446-26410	CLUTCH (A), 1-WAY	1	1	1	1				
12-1	1	198220-26410	CLUTCH (A), 1-WAY	1	1	1	1			S	1
	(A=T/# 00898)	(B=T/# 02355)	(C=T/# 20991) (D=T/# 42957)								
13	1	194446-26420	CLUTCH (B), 1-WAY	1	1	1	1				
13-1	1	198220-26420	CLUTCH (B), 1-WAY	1	1	1	1			S	1
	(A=T/# 00898)	(B=T/# 02355)	(C=T/# 20991) (D=T/# 42957)								
14	1	194446-26450	SPRING, 1-WAY CLUTCH	1	1	1	1				
15	1	194446-26460	RETAINER	1	1					Z	
	(A=T/# 00217)	(B=T/# 00567)									
16	1	194446-26280	BUSH 14X18X15	1	1	1	1				
17	1	194446-26470	CIRCRIP	2	2					Z	
	(A=T/# 00217)	(B=T/# 00567)									
19	1	194300-25500	SHAFT, REVERSE IDLE	1	1	1	1				
20	1	194300-25510	GEAR, REVERSE	1	1	1	1				
21	1	194300-25540	NEEDLE BEARING	1	1	1	1				
22	1	194300-25550	WASHER 12X26X1	1	1	1	1				
23	1	26716-080002	NUT M 8	1	1	1	1				
24	1	22217-080000	SPRING WASHER 8	1	1	1	1				
25	1	194446-26310	SHAFT, P.T.O.	1	1	1	1				
26	1	24121-062044	BALL BEARING	1	1		1				
26-1	1	24101-062044	BALL BEARING	1	1	1	1			S	
	(A=T/# 00419)	(B=T/# 01190)	(D=T/# 40162)								
27	1	194446-26320	GEAR, SLIDE	1	1	1	1				
28	1	194446-26330	GEAR, P.T.O.	1	1	1	1				
29	1	24101-060064	BALL BEARING	1	1	1	1				
30	1	22242-000290	CIRCLIP 29	1	1	1	1				
31	1	194310-37560	WASHER	1	1	1	1				
32	1	22252-000550	CIRCLIP 55	1	1	1	1				
33	1	194300-25890	COLLAR 30X38X5	1	1	1	1				
34	1	194990-52600	SEAL TC 38 55 8, OIL	1	1	1	1				
34-1	1	24423-385508	SEAL TC38 55 8, OIL	1	1	1	1			R	
	(A=T/# 00815)	(B=T/# 02021)	(C=T/# 20956) (D=T/# 42765)								
35	1	24101-062064	BALL BEARING	1	1	1	1				
36	1	195040-13320	COLLAR 30X38X14,SEAL	1	1	1	1				
37	1	24101-063044	BALL BEARING	1	1	1	1				
38	1	24121-062034	BALL BEARING	1	1		1				
38-1	1	24101-062034	BALL BEARING	1	1	1	1			S	
	(A=T/# 00419)	(B=T/# 01190)	(D=T/# 40162)								

N:Old $\xleftarrow[\text{No}]{\text{Yes}}$ New, Q:Old $\xleftarrow[\text{Yes}]{\text{No}}$ New, R:Old $\xleftarrow[\text{Yes}]{\text{Yes}}$ New, S:Old $\xleftarrow[\text{No}]{\text{No}}$ New, W:Add, Z:Discontinued, F:Interchangeable by set, K:Q'ty Change

++ CONTINUE ++

(C)Copy Rights YANMAR CO.,LTD.

Fig.42. RANGE SHIFT SHAFT

Fig. 42 RANGE SHIFT SHAFT

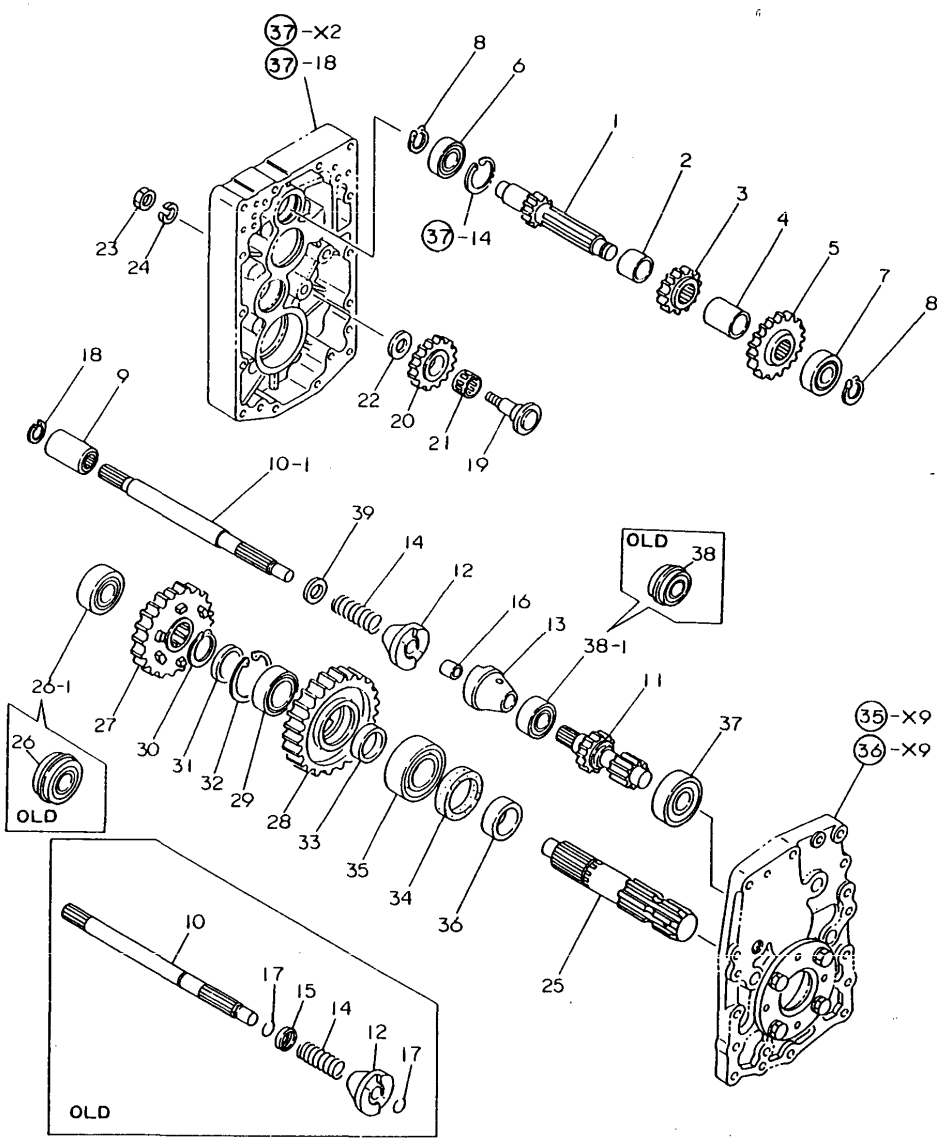

42. RANGE SHIFT SHAFT

(A)=YM186 (FLOOR (D)=YM186D(COLUM
(B)=YM186D(FLOOR (E)=
(C)=YM186 (COLUM (F)=

REF.	LEV.	PARTS NO.	DESCRIPTION	Q'TY (A)	(B)	(C)	(D)	(E)	(F)	I	R
39	1	22117-160000	WASHER 16	1	1	1	1			W	
	(A=T/# 00217)	(B=T/# 00567)	(C=FROM 1ST) (D=FROM 1ST)								

N:Old ◄Yes/No► New, Q:Old ◄No/Yes► New, R:Old ◄Yes/Yes► New, S:Old ◄No/No► New, W:Add, Z:Discontinued, F:Interchangeable by set, K:Q'ty Change

(C)Copy Rights YANMAR CO.,LTD.

Fig.43. FLOOR SHIFT & SHIFT LEVER

Fig. 43 FLOOR SHIFT & SHIFT LEVER

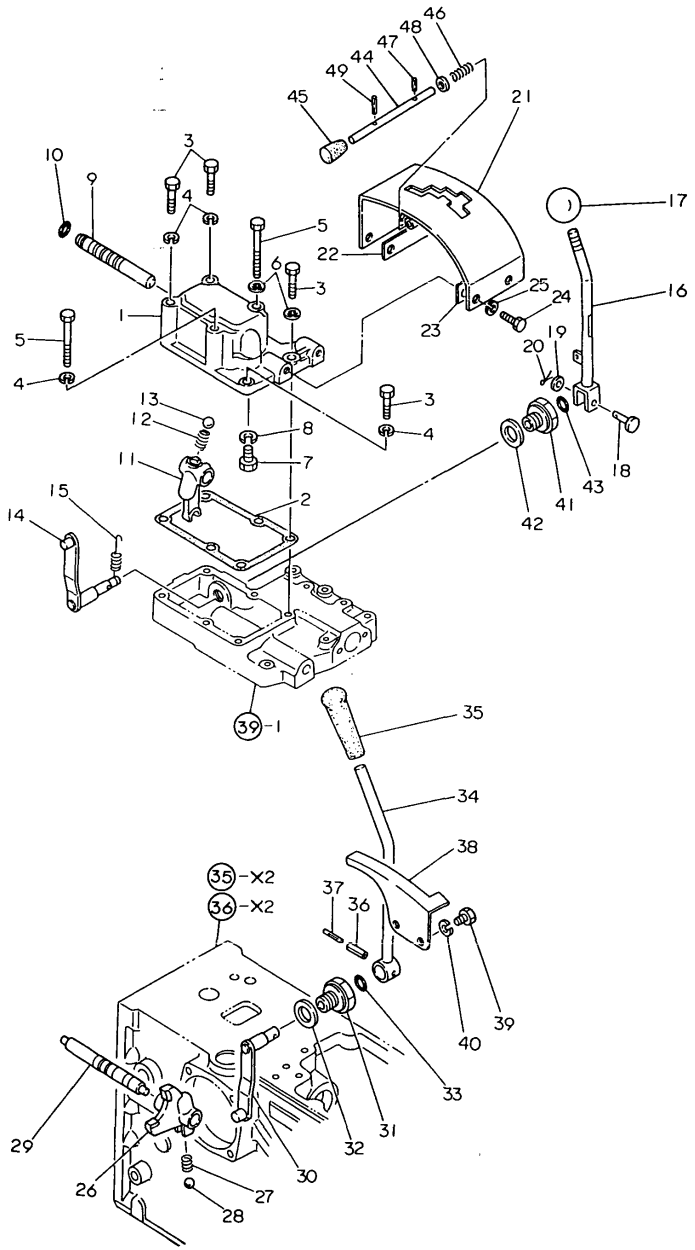

43. FLOOR SHIFT & SHIFT LEVER

(A)=YM186 (FLOOR (D)=YM186D(COLUM
(B)=YM186D(FLOOR (E)=
(C)=YM186 (COLUM (F)=

REF.	LEV.	PARTS NO.	DESCRIPTION	Q'TY (A)	(B)	(C)	(D)	(E)	(F)	I	R
1	1	194440-27130-X	COVER	1	1						
2	1	194300-27140	GASKET	1	1						
3	1	26116-080702	BOLT M 8X 70 PLATED	4	4						
4	1	22217-080000	SPRING WASHER 8	4	4						
5	1	26116-081152	BOLT M 8X115 PLATED	2	2						
6	1	194310-24240	SEAL WASHER 8	2	2						
7	1	194310-24760	BOLT	1	1						
8	1	22217-080000	SPRING WASHER 8	1	1						
9	1	194300-27100	SHAFT, FORK	1	1						
10	1	24311-000090	O-RING 1A P-9.0	1	1						
11	1	194440-27110	FORK, SHIFT	1	1						
12	1	194310-27140	SPRING, SHIFT FORK	1	1						
13	1	24190-140001	BALL 7/16, STEEL	1	1						
14	1	194440-27210	ARM, SHIFT	1	1						
15	1	194440-29580	SPRING, LEVER	1	1						
16	1	194440-27260-X	LEVER, MAIN SHIFT	1	1						
17	1	194310-29510	KNOB	1	1						
18	1	194300-27240	PIN 5X24.5	1	1						
18-1	1	194170-27380	PIN 5X 30.5	1	1					S	
	(A=T/# 00860)	(B=T/# 02189)									
19	1	22137-050000	WASHER 5, POLISHED	1	1					Z	
	(A=T/# 00860)	(B=T/# 02189)									
20	1	22417-160150	COTTER PIN 1.6X15	1	1						
20-1	1	22417-160150	COTTER PIN 1.6X15	2	2					K	
	(A=T/# 00860)	(B=T/# 02189)									
21-1	1	194446-27280-X	GUIDE ASSY, LEVER	1	1						
22	1	194300-27160	SHIM (F) L=72	-	-						1
23	1	194300-27170	SHIM (R) L=48	-	-						1
26	1	26116-080162	BOLT M 8X 16 PLATED	4	4						
27	1	22217-080000	SPRING WASHER 8	4	4						
28	1	194300-27300	FORK, SHIFT	1	1						
29	1	194310-27180	SPRING 22.2	1	1						
30	1	24190-100001	BALL 5/16, STEEL	1	1						
31	1	194440-27310	SHAFT, FORK	1	1						
32	1	194440-27360	ARM, SHIFT	1	1						
33	1	194440-27370	HOLDER	1	1						
34	1	23414-240000	GASKET 24	1	1						
35	1	24311-000160	O-RING 1A P-16.0	1	1						
36	1	194440-27350-X	LEVER, RANGE SHIFT	1	1						
37	1	194990-85561	KNOB	1	1						
38	1	22351-060025	SPRING PIN 6X25	1	1						
39	1	22351-035025	SPRING PIN 3.5X25	1	1						
40	1	194440-24990-X	GUIDE, LEVER	1	1						
41	1	26116-080162	BOLT M 8X 16 PLATED	2	2						
42	1	22217-080000	SPRING WASHER 8	2	2						
43	1	194300-27370	HOLDER	1	1						
44	1	23414-220000	PACKING 22,ROUND	1	1						
45	1	24311-000140	O-RING 1A P-14.0	1	1						
46	1	194446-27270-U	LEVER, LOCK	1	1					W	
	(A=FROM 1ST)	(B=FROM 1ST)									
47	1	194446-27250	KNOB 8X17X30	1	1					W	

N:Old $\overset{\text{Yes}}{\underset{\text{No}}{\leftrightarrow}}$ New, Q:Old $\overset{\text{No}}{\underset{\text{Yes}}{\leftrightarrow}}$ New, R:Old $\overset{\text{Yes}}{\underset{\text{Yes}}{\leftrightarrow}}$ New, S:Old $\overset{\text{No}}{\underset{\text{No}}{\leftrightarrow}}$ New, W:Add, Z:Discontinued, F:Interchangeable by set, K:Q'ty Change

++ CONTINUE ++

(C)Copy Rights YANMAR CO.,LTD.

Fig.43. FLOOR SHIFT & SHIFT LEVER

Fig. 43 FLOOR SHIFT & SHIFT LEVER

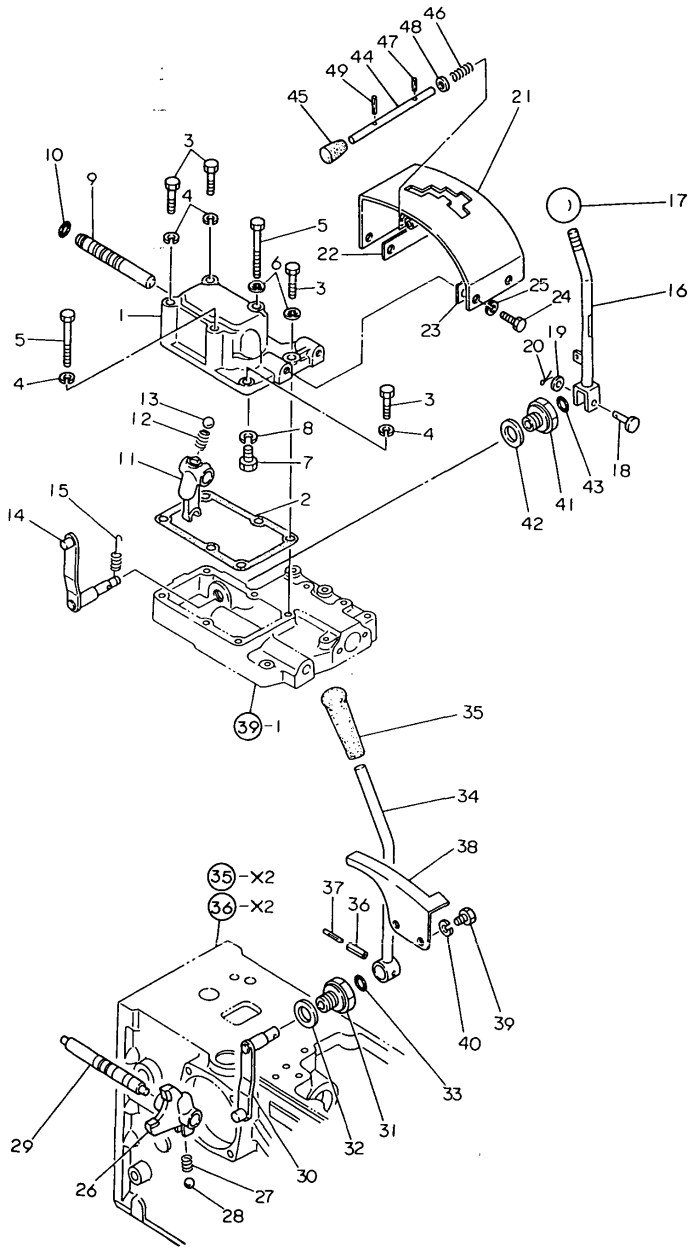

43. FLOOR SHIFT & SHIFT LEVER

(A)=YM186 (FLOOR (D)=YM186D(COLUM
(B)=YM186D(FLOOR (E)=
(C)=YM186 (COLUM (F)=

REF.	LEV.	PARTS NO.	DESCRIPTION	Q'TY (A)	(B)	(C)	(D)	(E)	(F)	I	R
	(A=FROM 1ST)	(B=FROM 1ST)									
48	1	194440-61830	SPRING	1	1					W	
	(A=FROM 1ST)	(B=FROM 1ST)									
48-1	1	194446-27220	SPRING	1	1					N	
	(A=T/# 00466)	(B=T/# 01162)									
49	1	22351-030010	SPRING PIN 3X10	1	1					W	
	(A=FROM 1ST)	(B=FROM 1ST)									
50	1	22137-080000	WASHER 8, POLISHED	1	1					W	
	(A=FROM 1ST)	(B=FROM 1ST)									
51	1	22417-300200	COTTER PIN 3.0X20	1	1					W	
	(A=FROM 1ST)	(B=FROM 1ST)									
51-1	1	22351-030025	SPRING PIN 3X25	1	1					N	
	(A=T/# 00466)	(B=T/# 01162)									

N:Old $\overset{\text{Yes}}{\underset{\text{No}}{\leftrightarrow}}$ New, Q:Old $\overset{\text{No}}{\underset{\text{Yes}}{\leftrightarrow}}$ New, R:Old $\overset{\text{Yes}}{\underset{\text{Yes}}{\leftrightarrow}}$ New, S:Old $\overset{\text{No}}{\underset{\text{No}}{\leftrightarrow}}$ New, W:Add, Z:Discontinued, F:Interchangeable by set, K:Q'ty Change

(C)Copy Rights YANMAR CO.,LTD.

Fig.44. COLUMN SHIFT

Fig. 44 COLUMN SHIFT

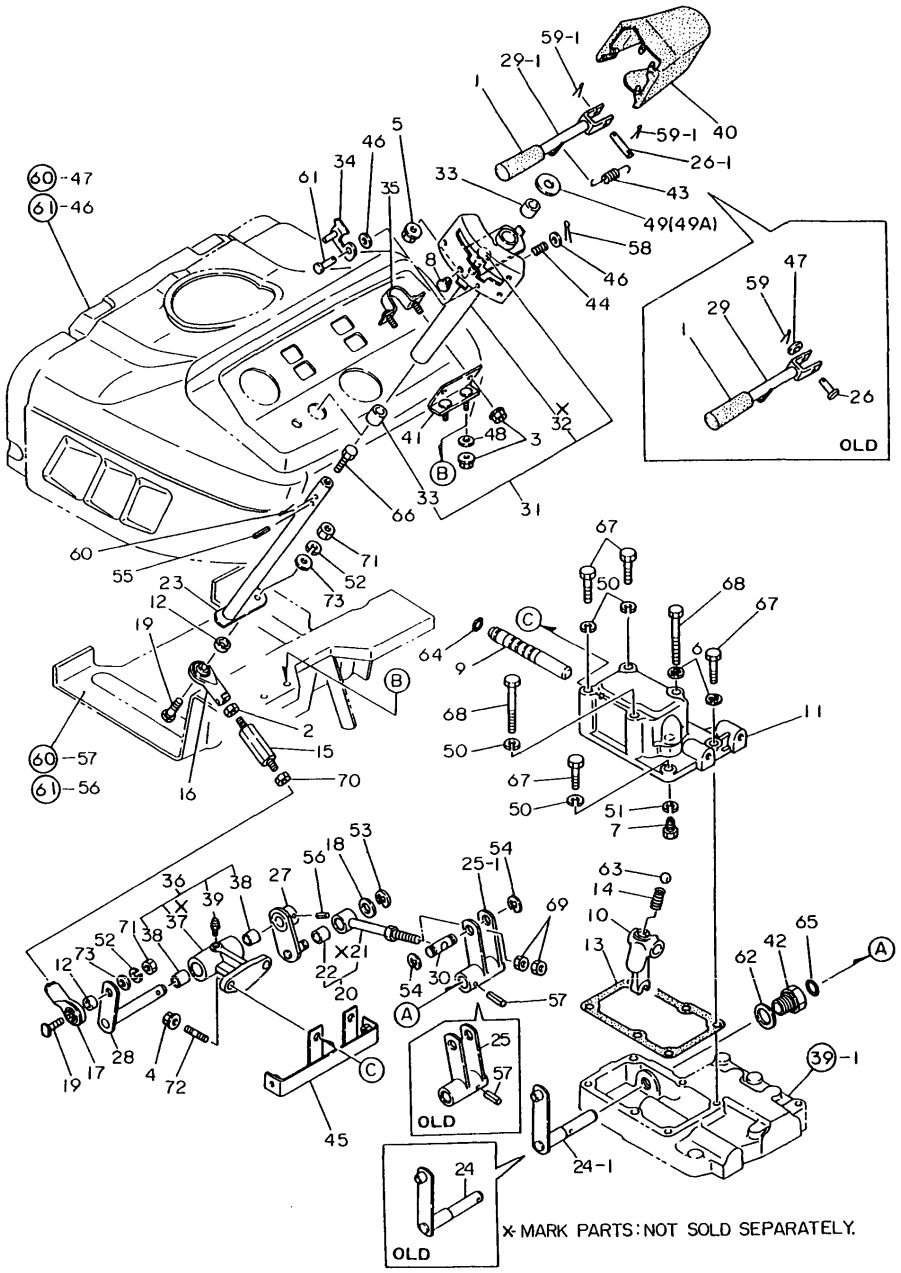

0CT10-G22801

44. COLUMN SHIFT

(A)=YM186 (FLOOR (D)=YM186D(COLUM
(B)=YM186D(FLOOR (E)=
(C)=YM186 (COLUM (F)=

REF.	LEV.	PARTS NO.	DESCRIPTION	Q'TY (A)	(B)	(C)	(D)	(E)	(F)	I	R
1	1	194464-01190	KNOB, THROTTLE LEVER			1	1				
2-1	1	194990-20170	NUT W/WASHER 8			1	1				
3-1	1	194990-22130	NUT W/WASHER 6			4	4				
4-1	1	194990-22050	NUT W/WASHER 8			2	2				
5-1	1	194990-22140	NUT W/WASHER 8			1	1				
6	1	194310-24240	SEAL WASHER 8			2	2				
7	1	194310-24760	BOLT			1	1				
8	1	1C6053-26020	CAP, RUBBER			1	1				
9	1	194300-27100	SHAFT, FORK			1	1				
9A	1	22117-120000	WASHER 12			2	2			W	
			(C=*1982.10) (D=*1982.10)								
10	1	194440-27110	FORK, SHIFT			1	1				
11	1	194500-27130-X	COVER			1	1				
12	1	194170-27140	COLLAR 14X10X5			2	2			Z	
			(C=T/# 20956) (D=T/# 42732)								
13	1	194300-27140	GASKET			1	1				
14	1	194310-27140	SPRING, SHIFT FORK			1	1				
15	1	194490-27150	BOLT, ADJUST			1	1				
16	1	194170-27170-X	END (L), ROD			1	1				
17	1	194170-27180-X	END (R), ROD			1	1				
18	1	194080-27190	WASHER 13X19X2			1	1				
18-1	1	194500-27150	WASHER 13X19X2			1	1			N	
			(C=*1981.06) (D=*1981.06)								
19	1	194170-27190	BOLT M10X 28			2	2				
20	1	194500-27190	ROD ASSY, CONNECTING			1	1				
22	2	194145-47160	BUSH 13X15X15			1	1				
22-1	2	24550-013150	BUSHING 13X15			1	1			N	
			(C=T/# 20984) (D=T/# 42900)								
23	1	194432-27200	SHAFT, MAIN SHIFT			1	1				
23-1	1	194432-27201	SHAFT, MAIN SHIFT			1	1			N	
			(C=*) (D=*)								
24	1	194500-27211-X	ARM, SHIFT			1	1				
24-1	1	194500-27212-X	ARM, SHIFT			1	1			S	1
			(C=T/# 20101) (D=T/# 40252)								
25	1	194500-27220	ARM, SHIFT			1	1				
25-1	1	194500-27221-X	ARM (B), SHIFT			1	1			S	1
			(C=T/# 20101) (D=T/# 40252)								
26	1	194300-27240	PIN 5X24.5			1	1				
26-1	1	194170-27380	PIN 5X 30.5			1	1			S	2
			(C=T/# 20972) (D=T/# 42882)								
27	1	194500-27240-U	ARM, SHIFT			1	1				
28	1	194500-27250-U	ARM, SHIFT			1	1				
29	1	194170-27260	LEVER, MAIN SHIFT			1	1				
29-1	1	194170-27261	LEVER, MAIN SHIFT			1	1			N	2
			(C=T/# 20972) (D=T/# 42882)								
30	1	194500-27260	PIN, ROD			1	1				
31	1	194432-27270-X	GUIDE ASSY, LEVER			1	1				
33	2	194145-47160	BUSH 13X15X15			2	2				
33-1	2	24550-013150	BUSHING 13X15			2	2			N	
			(C=T/# 20984) (D=T/# 42900)								
34	1	194170-27290-X	PLATE, LOCK			1	1				

N:Old $\frac{\text{Yes}}{\text{No}}$ New, Q:Old $\frac{\text{No}}{\text{Yes}}$ New, R:Old $\frac{\text{Yes}}{\text{Yes}}$ New, S:Old $\frac{\text{No}}{\text{No}}$ New, W:Add, Z:Discontinued, F:Interchangeable by set, K:Q'ty Change

++ CONTINUE ++

(C)Copy Rights YANMAR CO.,LTD.

Fig.44. COLUMN SHIFT

Fig. 44 COLUMN SHIFT

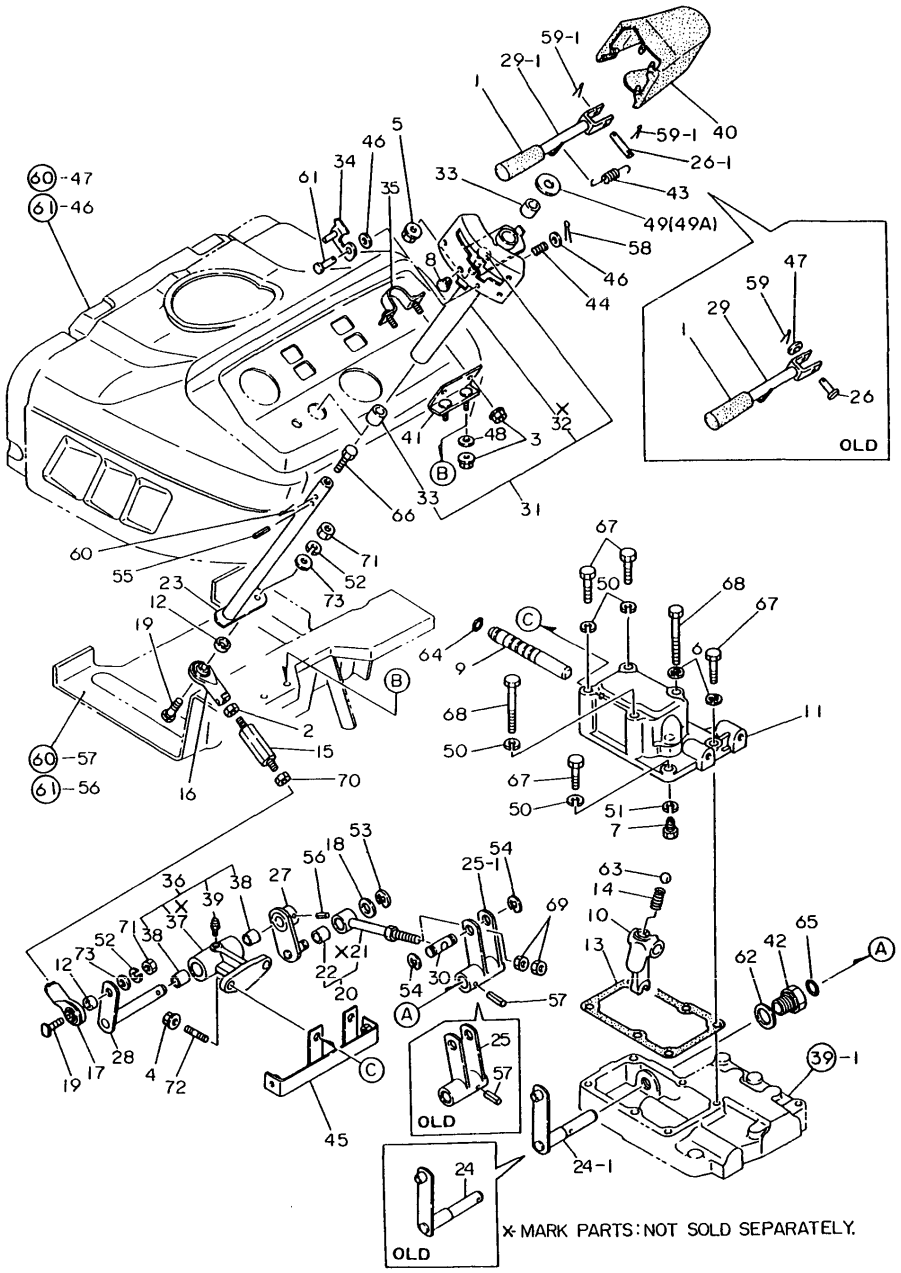

44. COLUMN SHIFT

(A)=YM186 (FLOOR (D)=YM186D(COLUM
(B)=YM186D(FLOOR (E)=
(C)=YM186 (COLUM (F)=

REF.	LEV.	PARTS NO.	DESCRIPTION	Q'TY (A)	(B)	(C)	(D)	(E)	(F)	I	R
35	1	194170-27310-X	CLAMP			1	1				
36	1	194500-27310-X	HINGE ASSY			1	1				
38	2	194145-47160	BUSH 13X15X15			2	2				
38-1	2	24550-013150	BUSHING 13X15 (C=T/# 20984) (D=T/# 42900)			2	2			N	
39	2	24761-010000	NIPPLE M6F, GREASE			1	1				
40	1	194170-27340-X	COVER			1	1				
41	1	194500-27360-X	STAY			1	1				
42	1	194170-27370-X	HOLDER			1	1				
43	1	194440-29580	SPRING, LEVER			1	1				
44	1	194162-53310	SPRING			1	1				
45	1	194500-61680-X	STAY, GEAR BOX			1	1				
46	1	22137-040000	WASHER 4			2	2				
47	1	22137-050000	WASHER 5, POLISHED (C=T/# 20972) (D=T/# 42882)			1	1			Z	2
48	1	22137-060000	WASHER 6, POLISHED (C=*) (D=*)			2	2			Z	
49	1	194500-27150	WASHER 13X19X2			1	1				3
49A	1	22137-140000	WASHER 14,POLISHED			1	1				3
50	1	22217-080000	SPRING WASHER 8			4	4				
51	1	22217-080000	SPRING WASHER 8			1	1				
52	1	22217-100000	SPRING WASHER 10			2	2				
53	1	22272-000090	CIRCLIP E- 9			1	1				
54	1	22272-000090	CIRCLIP E- 9			2	2				
55	1	22351-030020	SPRING PIN 3X20			1	1				
56	1	22351-050025	SPRING PIN 5X25			1	1				
57	1	22351-050025	SPRING PIN 5X25			1	1				
58	1	22417-120100	COTTER PIN 1.2X10			1	1				
59	1	22417-160180	COTTER PIN 1.6X18			1	1				
59-1	1	22417-160180	COTTER PIN 1.6X18 (C=T/# 20972) (D=T/# 42882)			2	2			K	2
60	1	22417-300250	COTTER PIN 3.0X 25			1	1				
61	1	22487-040140	PIN 4X 14			1	1				
62	1	23414-220000	PACKING 22,ROUND			1	1				
63	1	24190-140001	BALL 7/16, STEEL			1	1				
64	1	24311-000090	O-RING 1A P-9.0			1	1				
65	1	24311-000140	O-RING 1A P-14.0			1	1				
66	1	26116-060102	BOLT M 6X 10 PLATED			1	1				
66-1	1	26557-060082	SCREW M 6X 8 (C=*) (D=*)			1	1			N	
67	1	26116-080702	BOLT M 8X 70 PLATED			4	4				
68	1	26116-081152	BOLT M 8X115 PLATED			2	2				
69	1	26716-060002	NUT M 6			2	2				
70	1	26716-080002	NUT M 8			1	1				
71	1	26716-100002	NUT M10			2	2				
72	1	26216-080222	STUD M 8X 22 PLATED			2	2				
73	1	194145-04810	WASHER 10 (C=T/# 20956) (D=T/# 42732)			2	2			W	

N:Old $\overset{\text{Yes}}{\underset{\text{No}}{\leftrightarrow}}$ New, Q:Old $\overset{\text{No}}{\underset{\text{Yes}}{\leftrightarrow}}$ New, R:Old $\overset{\text{Yes}}{\underset{\text{Yes}}{\leftrightarrow}}$ New, S:Old $\overset{\text{No}}{\underset{\text{No}}{\leftrightarrow}}$ New, W:Add, Z:Discontinued, F:Interchangeable by set, K:Q'ty Change

(C)Copy Rights YANMAR CO.,LTD.

Fig.45. P.T.O. SHIFT LEVER

Fig. 45 POWER TAKE OFF LEVER

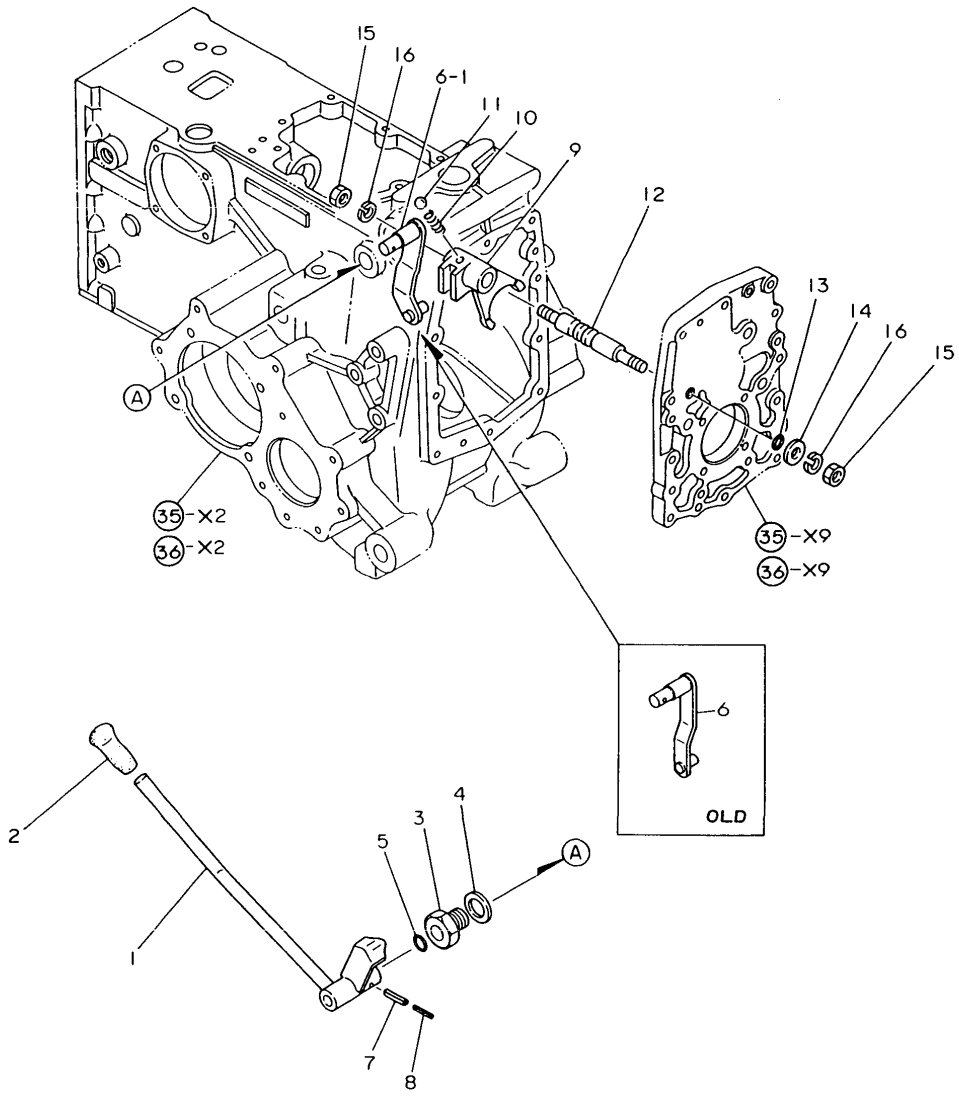

0CT10-G22801

45. P.T.O. SHIFT LEVER

(A)=YM186 (FLOOR
(B)=YM186D(FLOOR
(C)=YM186 (COLUM
(D)=YM186D(COLUM
(E)=
(F)=

REF.	LEV.	PARTS NO.	DESCRIPTION	Q'TY (A)	(B)	(C)	(D)	(E)	(F)	I	R
1	1	194446-27560-X	LEVER, PTO CHANGE	1	1	1	1				
2	1	194145-27960	KNOB	1	1	1	1				
3	1	194440-27370	HOLDER	1	1	1	1				
4	1	23414-240000	GASKET 24	1	1	1	1				
5	1	24311-000160	O-RING 1A P-16.0	1	1	1	1				
6	1	194440-27570	ARM, P.T.O. SHIFT	1	1						
6-1	1	194446-27570	ARM, P.T.O. SHIFT	1	1	1	1			N	
	(A=T/# 00207)	(B=T/# 00528)									
7	1	22351-060025	SPRING PIN 6X25	1	1	1	1				
8	1	22351-035025	SPRING PIN 3.5X25	1	1	1	1				
9	1	194300-27500	FORK, SHIFT	1	1	1	1				
10	1	194310-27180	SPRING 22.2	1	1	1	1				
11	1	24190-100001	BALL 5/16, STEEL	1	1	1	1				
12	1	194446-27510	SHAFT, FORK	1	1	1	1				
13	1	24341-000120	O-RING 1A S-12.0	1	1	1	1				
14	1	194300-24870	WASHER	1	1	1	1				
15	1	26736-120002	NUT M12	2	2	2	2				
16	1	22217-120000	WASHER 12,SPRING	2	2	2	2				

N:Old ←Yes/No→ New, Q:Old ←No/Yes→ New, R:Old ←Yes/Yes→ New, S:Old ←No/No→ New, W:Add, Z:Discontinued, F:Interchangeable by set, K:Q'ty Change

(C)Copy Rights YANMAR CO.,LTD.

Fig.46. FRONT DRIVE (FOR YM186D)

Fig. 46 FRONT DRIVE (FOR YM186D)

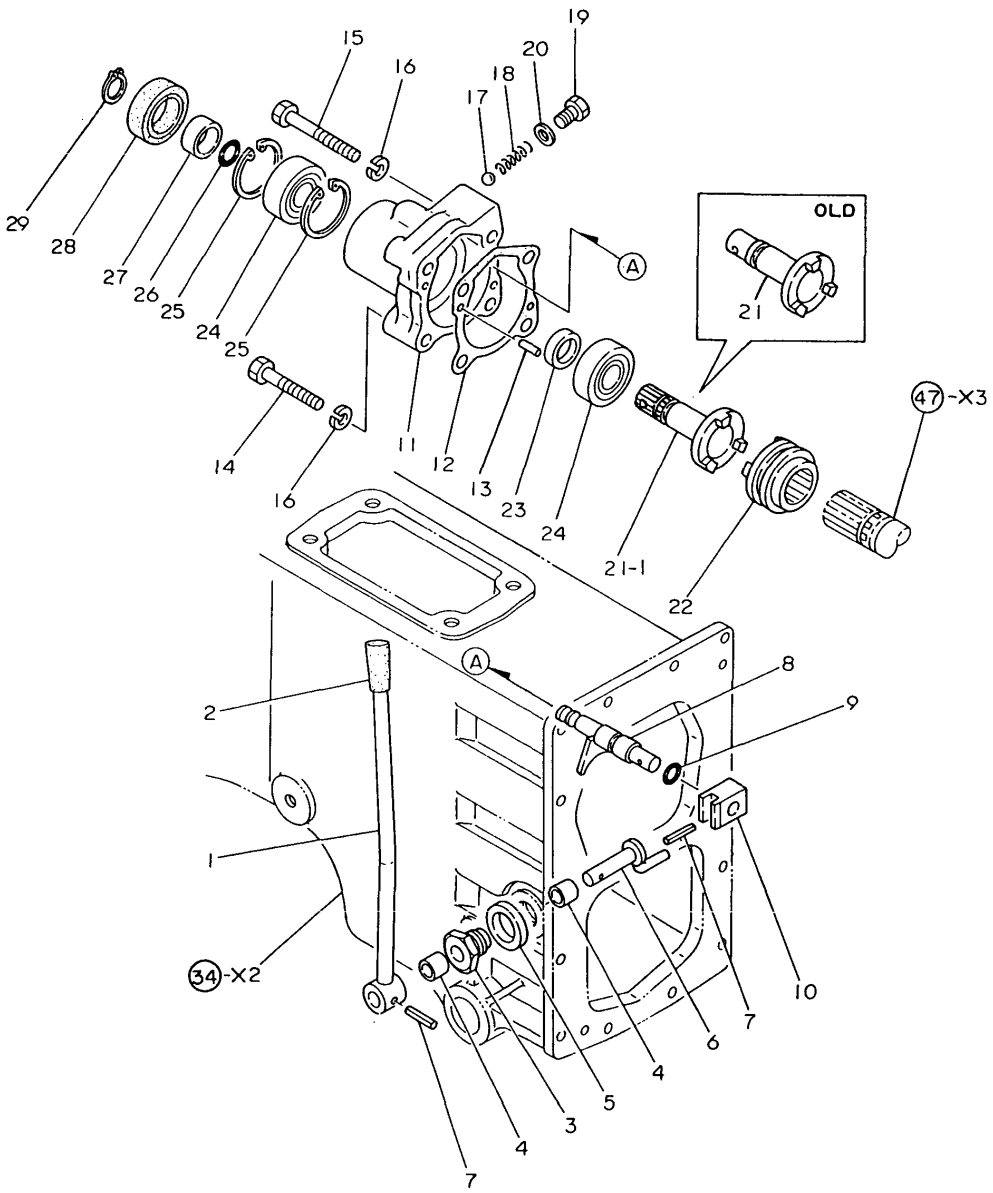

0CT10-G22801

46. FRONT DRIVE (FOR YM186D)

(A)=YM186 (FLOOR (D)=YM186D(COLUM
(B)=YM186D(FLOOR (E)=
(C)=YM186 (COLUM (F)=

REF.	LEV.	PARTS NO.	DESCRIPTION	Q'TY (A)	(B)	(C)	(D)	(E)	(F)	I	R
1	1	194447-22810-X	LEVER, FRONT DRIVE		1		1				
2	1	194191-28480	KNOB		1		1				
3	1	194301-22860	HOLDER, CIRCLIP		1		1				
4	1	194301-22870	BUSH 12X14X10		2		2				
5	1	194441-28360	SPACER 24X35X4.5		1		1				
6	1	194301-22830	SHAFT, LEVER		1		1				
7	1	22351-050025	SPRING PIN 5X25		2		2				
8	1	194301-28272	FORK ASSY, SLIDER		1		1				
9	1	24311-000110	O-RING 1A P-11.0		1		1				
10	1	194301-28290	HOOK		1		1				
11	1	194301-28101	COVER		1		1				
12	1	194301-28110	GASKET		1		1				
13	1	22312-060180	PIN 6X18,STRAIGHT		2		2				
14	1	26116-080452	BOLT M 8X 45 PLATED		3		3				
15	1	26116-080552	BOLT M 8X 55 PLATED		1		1				
16	1	22217-080000	SPRING WASHER 8		4		4				
17	1	24190-080001	BALL 1/4, STEEL		1		1				
18	1	194301-28280	SPRING 25.8		1		1				
19	1	23881-080002	PLUG 8		1		1				
20	1	23414-080000	GASKET 8, ROUND		1		1				
21	1	194441-28150	SHAFT, FRONT IDLE		1		1				
21-1	1	194447-28150	SHAFT, FRONT DRIVE		1		1			S	1
		(B=T/# 02068)	(D=T/# 42819)								
22	1	194301-28160	SLIDER, FRONT DRIVE		1		1				
23	1	194301-28210	SPACER 20X27X7.5		1		1				
24	1	24101-060044	BALL BEARING 6004		2		2				
25	1	22252-000420	CIRCLIP 42		2		2				
26	1	24311-000160	O-RING 1A P-16.0		1		1				
27	1	194301-28230	SLEEVE 20X25X13		1		1				
28	1	194301-28240	SEAL TC25 42 8, OIL		1		1				
28-1	1	24421-254208	SEAL TC25 42 08, OIL		1		1			R	
		(B=T/# 02021)	(D=T/# 42765)								
29	1	22242-000190	CIRCLIP 19		1		1			W	1
		(B=T/# 02068)	(D=T/# 42819)								

N:Old $\overset{\text{Yes}}{\underset{\text{No}}{\leftrightarrow}}$ New, Q:Old $\overset{\text{No}}{\underset{\text{Yes}}{\leftrightarrow}}$ New, R:Old $\overset{\text{Yes}}{\underset{\text{Yes}}{\leftrightarrow}}$ New, S:Old $\overset{\text{No}}{\underset{\text{No}}{\leftrightarrow}}$ New, W:Add, Z:Discontinued, F:Interchangeable by set, K:Q'ty Change

(C)Copy Rights YANMAR CO.,LTD.

Fig.47. RING GEARS

Fig. 47 RING GEARS

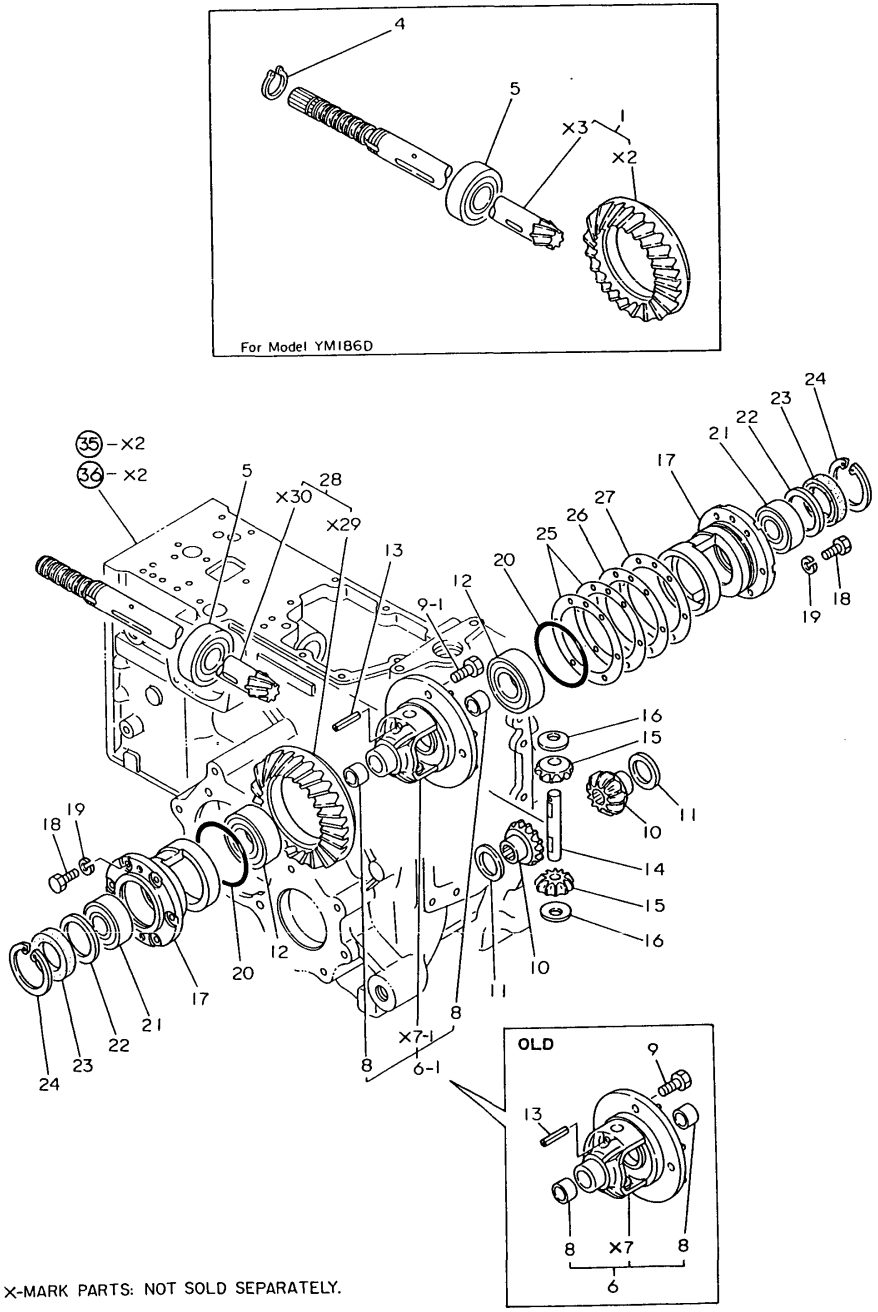

X-MARK PARTS: NOT SOLD SEPARATELY.

0CT10-G22801 47. RING GEARS

(A)=YM186 (FLOOR (D)=YM186D(COLUM
(B)=YM186D(FLOOR (E)=
(C)=YM186 (COLUM (F)=

REF.	LEV.	PARTS NO.	DESCRIPTION	Q'TY (A)	(B)	(C)	(D)	(E)	(F)	I	R
1	1	194441-31400	GEAR W/COUNTERSHAFT		1		1				
1-1	1	194501-31400	GEAR W/COUNTERSHAFT		1		1			S	1
		(B=T/# 01989)	(D=T/# 42723)								
4	1	194301-25650	CIRCLIP 27-S		1		1				
5	1	194446-25630	BALL BEARING	1	1	1	1				
6	1	194300-31500	HOUSING ASSY, DIFF.	1	1	1	1				
6-1	1	194500-31500	HOUSING ASSY, DIFF.	1	1	1	1			S	1
	(A=T/# 00792)	(B=T/# 01989)	(C=T/# 20956) (D=T/# 42723)								
8	2	194300-31520	BUSH 22X25X14	2	2	2	2				
9	1	194300-31120	BOLT	4	4	4	4				
9-1	1	194300-31120	BOLT	6	6	6	6			K	1
	(A=T/# 00792)	(B=T/# 01989)	(C=T/# 20956) (D=T/# 42723)								
10	1	194300-31550	GEAR, DIFFERENTIAL	2	2	2	2				
11	1	194300-31610	WASHER, DIFFERENTIAL	2	2	2	2				
12	1	24101-062074	BALL BEARING	2	2	2	2				
13	1	22351-040030	SPRING PIN 4X30	1	1	1	1				
14	1	194300-31570	SHAFT, DIFFERENTIAL	1	1	1	1				
15	1	194300-31560	GEAR, DIFFERENTIAL	2	2	2	2				
16	1	194300-31620	WASHER, DIFFERENTIAL	2	2	2	2				
17	1	194440-32110	CARRIER,DIFFERENTIAL	2	2	2	2				
18	1	26116-080162	BOLT M 8X 16 PLATED	12	12	12	12				
19	1	22217-080000	SPRING WASHER 8	12	12	12	12				
20	1	24321-000800	O-RING 1A G-80.0	2	2	2	2				
21	1	24101-063054	BEARING #6305	2	2	2	2				
22	1	194440-32210	COLLAR 45X62X2.6	2	2	2	2				
23	1	194300-32390	SEAL TC40 62 8, OIL	2	2	2	2				
23-1	1	24421-406208	SEAL TC 40628, OIL	2	2	2	2			R	
	(A=T/# 00815)	(B=T/# 02021)	(C=T/# 20956) (D=T/# 42765)								
24	1	22252-000620	CIRCLIP 62(H)	2	2	2	2				
25	1	194440-32350	SHIM T=0.1	2	2	2	2				2
26	1	194440-32360	SHIM T=0.3	1	1	1	1				2
27	1	194440-32370	SHIM T=0.5	1	1	1	1				2
28	1	194440-31400	GEAR W/COUNTERSHAFT	1		1					
28-1	1	194500-31400	GEAR W/COUNTERSHAFT	1		1				S	1
	(A=T/# 00792)		(C=T/# 20956)								

N:Old $\overset{\text{Yes}}{\underset{\text{No}}{\leftrightarrow}}$ New, Q:Old $\overset{\text{No}}{\underset{\text{Yes}}{\leftrightarrow}}$ New, R:Old $\overset{\text{Yes}}{\underset{\text{Yes}}{\leftrightarrow}}$ New, S:Old $\overset{\text{No}}{\underset{\text{No}}{\leftrightarrow}}$ New, W:Add, Z:Discontinued, F:Interchangeable by set, K:Q'ty Change

(C)Copy Rights YANMAR CO.,LTD.

Fig.48. REAR HOUSING

Fig. 48 REAR HOUSING

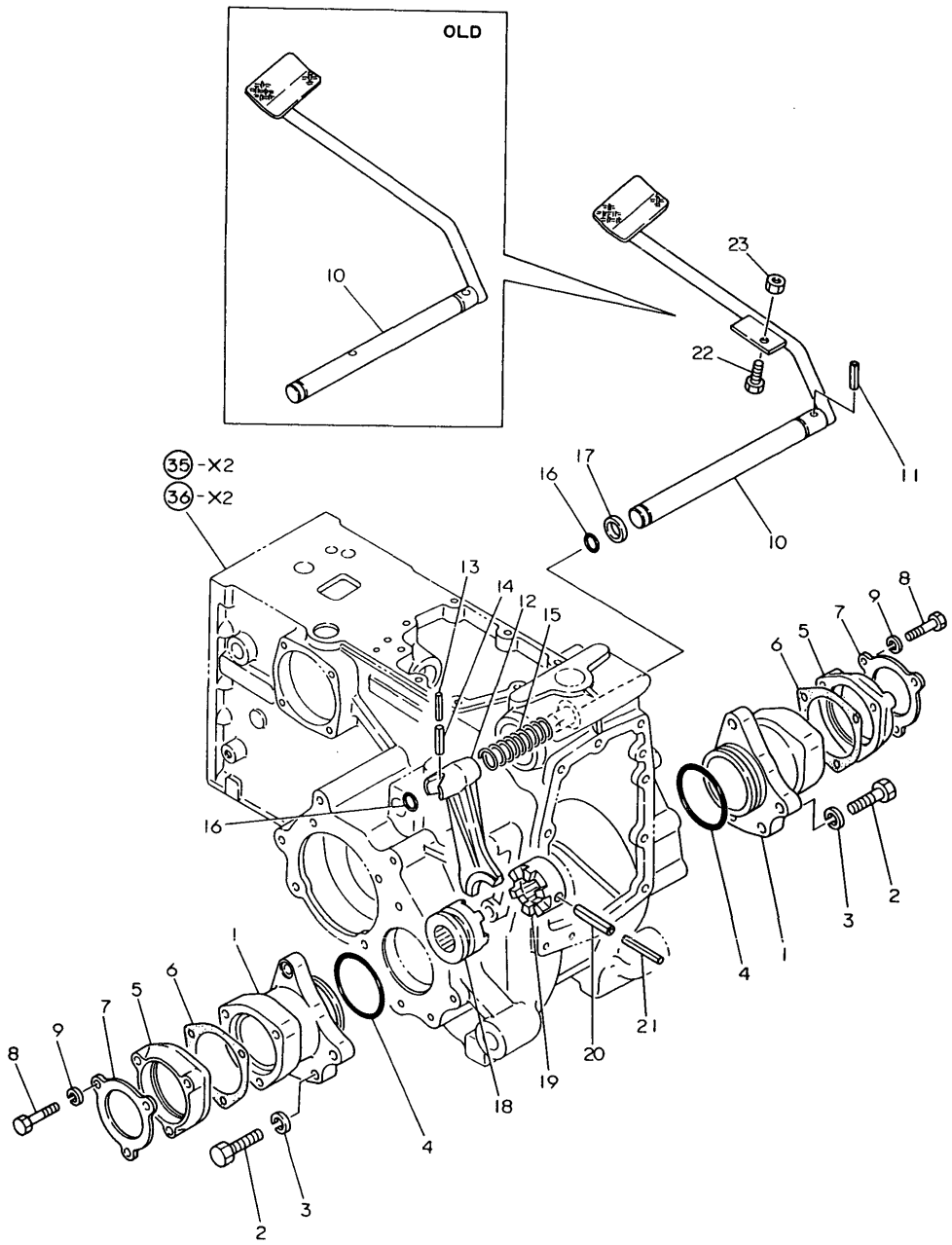

0CT10-G22801

48. REAR HOUSING

(A)=YM186 (FLOOR (D)=YM186D(COLUM
(B)=YM186D(FLOOR (E)=
(C)=YM186 (COLUM (F)=

REF.	LEV.	PARTS NO.	DESCRIPTION	Q'TY (A)	(B)	(C)	(D)	(E)	(F)	I	R
1	1	194440-24900-X	CASE, BEARING	2	2	2	2				
2	1	26116-120402	BOLT M12X 40	10	10	10	10				
3	1	22217-120000	WASHER 12,SPRING	10	10	10	10				
4	1	24321-000750	O-RING 1A G-75.0	2	2	2	2				
5	1	194440-24910-X	CASE, OIL SEAL	2	2	2	2				
6	1	194440-24920	GASKET	2	2	2	2				
7	1	194446-24930-X	COVER	2	2	2	2				
8	1	26116-080402	BOLT M 8X 40 PLATED	6	6	6	6				
9	1	22217-080000	SPRING WASHER 8	6	6	6	6				
10	1	194446-33150-X	PEDAL, DIFF. LOCK	1	1	1	1				
11	1	22351-080032	SPRING PIN 8X32	1	1	1	1				
12	1	194300-33120	FORK, SHIFT	1	1	1	1				
13	1	22351-050040	SPRING PIN 5X40	1	1	1	1				
14	1	22351-080040	SPRING PIN 8X40	1	1	1	1				
15	1	194440-33190	SPRING	1	1	1	1				
16	1	24311-000160	O-RING 1A P-16.0	2	2	2	2				
17	1	194300-33200	SPACER 20X32X3.2	1	1	1	1				
18	1	194300-33110	SLIDER(L), DIFF.LOCK	1	1	1	1				
18-1	1	194305-33110	SLIDER(L), DIFF.LOCK	1	1	1	1			N	
	(A=T/# 00909)	(B=T/# 02372)	(C=T/# 20991) (D=T/# 42957)								
19	1	194300-33130	SLIDER(R), DIFF.LOCK	1	1	1	1				
19-1	1	194305-33130	SLIDER(R), DIFF.LOCK	1	1	1	1			N	
	(A=T/# 00909)	(B=T/# 02372)	(C=T/# 20991) (D=T/# 42957)								
20	1	22351-080063	SPRING PIN 8X63	1	1	1	1				
21	1	22351-050063	SPRING PIN 5X63	1	1	1	1				
22	1	26116-100202	BOLT M10X 20 PLATED	1	1	1	1			W	
	(A=T/# 00510)	(B=T/# 01221)	(C=FROM 1ST) (D=FROM 1ST)								
23	1	26716-100002	NUT M10	1	1	1	1			W	
	(A=T/# 00510)	(B=T/# 01221)	(C=FROM 1ST) (D=FROM 1ST)								

N:Old $\frac{\text{Yes}}{\text{No}}$ New, Q:Old $\frac{\text{No}}{\text{Yes}}$ New, R:Old $\frac{\text{Yes}}{\text{Yes}}$ New, S:Old $\frac{\text{No}}{\text{No}}$ New, W:Add, Z:Discontinued, F:Interchangeable by set, K:Q'ty Change

(C)Copy Rights YANMAR CO.,LTD.

Fig.49. REAR AXLE SHAFT

Fig. 49 REAR AXLE SHAFT

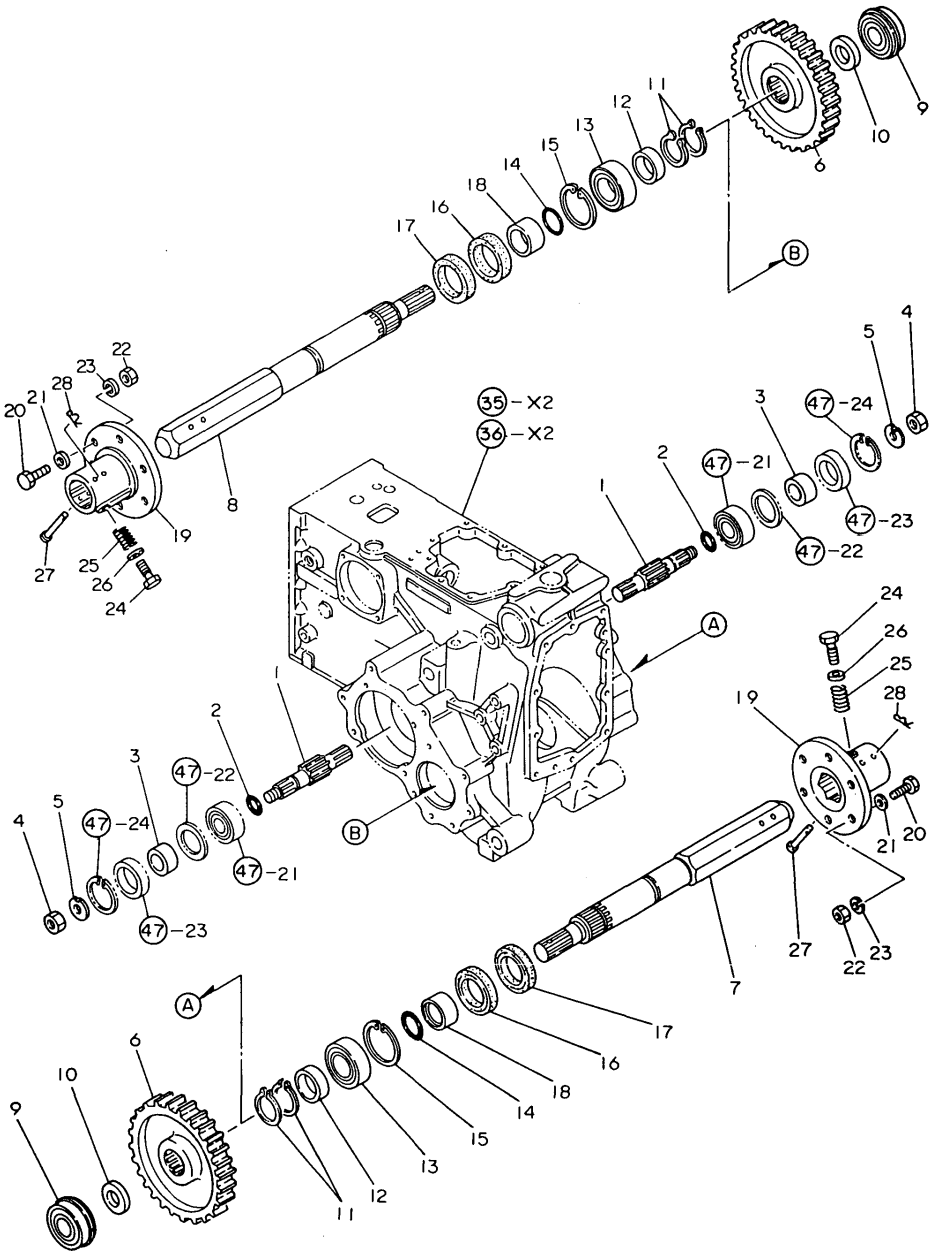

49. REAR AXLE SHAFT

(A)=YM186 (FLOOR (D)=YM186D(COLUM
(B)=YM186D(FLOOR (E)=
(C)=YM186 (COLUM (F)=

REF.	LEV.	PARTS NO.	DESCRIPTION	Q'TY (A)	(B)	(C)	(D)	(E)	(F)	I	R
1	1	194440-32150	PINION, FINAL	2	2	2	2				
2	1	24311-000210	O-RING 1A P-21.0	2	2	2	2				
3	1	194300-32200	COLLAR 25X40X15	2	2	2	2				
4	1	194300-32260	NUT 20	2	2	2	2				
5	1	194300-32250	WASHER	2	2	2	2				
6	1	194440-32520	GEAR, FINAL	2	2	2	2				
7	1	194446-32510-U	SHAFT, REAR AXLE	1	1	1	1				
8	1	194446-32530-U	SHAFT, REAR AXLE	1	1	1	1				
9	1	24121-062074	BALL BEARING	2	2	2	2				
10	1	194440-32570	COLLAR 36X54X4.5	2	2	2	2				
11	1	22242-000450	CIRCLIP 45	4	4	4	4				
12	1	194440-32580	COLLAR 45X55X20	2	2	2	2				
13	1	24101-060094	BALL BEARING	2	2	2	2				
14	1	24321-000450	O-RING 1A G-45.0	2	2	2	2				
15	1	22252-000750	CIRCLIP 75	2	2	2	2				
16	1	194446-32660	SEAL TC58 75 9, OIL	2	2	2	2				
16-1	1	24421-587509	SEAL TC 58759, OIL	2	2	2	2				R
	(A=T/# 00815)	(B=T/# 02019)	(C=T/# 20956)	(D=T/# 42749)							
17	1	194446-32670	SEAL VC58 75 7, OIL	2	2	2	2				
18	1	194446-32550	COLLAR 45X58X24	2	2	2	2				
19	1	194446-34710-Q	HUB, WHEEL	2	2	2	2				
19-1	1	194305-34720-Q	HUB, WHEEL	2	2	2	2				N
	(A=T/# 00851)	(B=T/# 02093)	(C=T/# 20967)	(D=T/# 42830)							
20	1	194446-34760	BOLT M12X 40	12	12	12	12				
20-1	1	194115-34760	BOLT M12X 40	12	12	12	12				N
	(A=T/# 00884)	(B=T/# 02327)	(C=T/# 20988)	(D=T/# 42939)							
21	1	194274-13580	SPRING WASHER 12	12	12	12	12				Z
	(A=T/# 00884)	(B=T/# 02327)	(C=T/# 20988)	(D=T/# 42939)							
22	1	26736-120002	NUT M12	12	12	12	12				
23	1	22217-120000	WASHER 12,SPRING	12	12	12	12				
24	1	1C6140-25210	BOLT, FLANGE	4	4	4	4				
25	1	1A1040-36040	SPRING, FLANGE BOLT	4	4	4	4				Z
	(A=T/# 00898)	(B=T/# 02355)	(C=T/# 20988)	(D=T/# 42957)							
26-1	1	22117-160000	WASHER 16	4	4	4	4				
26-2	1	26756-160002	LOCK NUT M16 PLATED	4	4	4	4				N
	(A=T/# 00898)	(B=T/# 02355)	(C=T/# 20988)	(D=T/# 42957)							
27	1	194200-34750	PIN 10X78	2	2	2	2				
28	1	22360-100000	SNAP PIN 10	2	2	2	2				

N:Old $\frac{\text{Yes}}{\text{No}}$ New, Q:Old $\frac{\text{No}}{\text{Yes}}$ New, R:Old $\frac{\text{Yes}}{\text{Yes}}$ New, S:Old $\frac{\text{No}}{\text{No}}$ New, W:Add, Z:Discontinued, F:Interchangeable by set, K:Q'ty Change

(C)Copy Rights YANMAR CO.,LTD.

Fig.50. BRAKES

Fig. 50 BRAKES

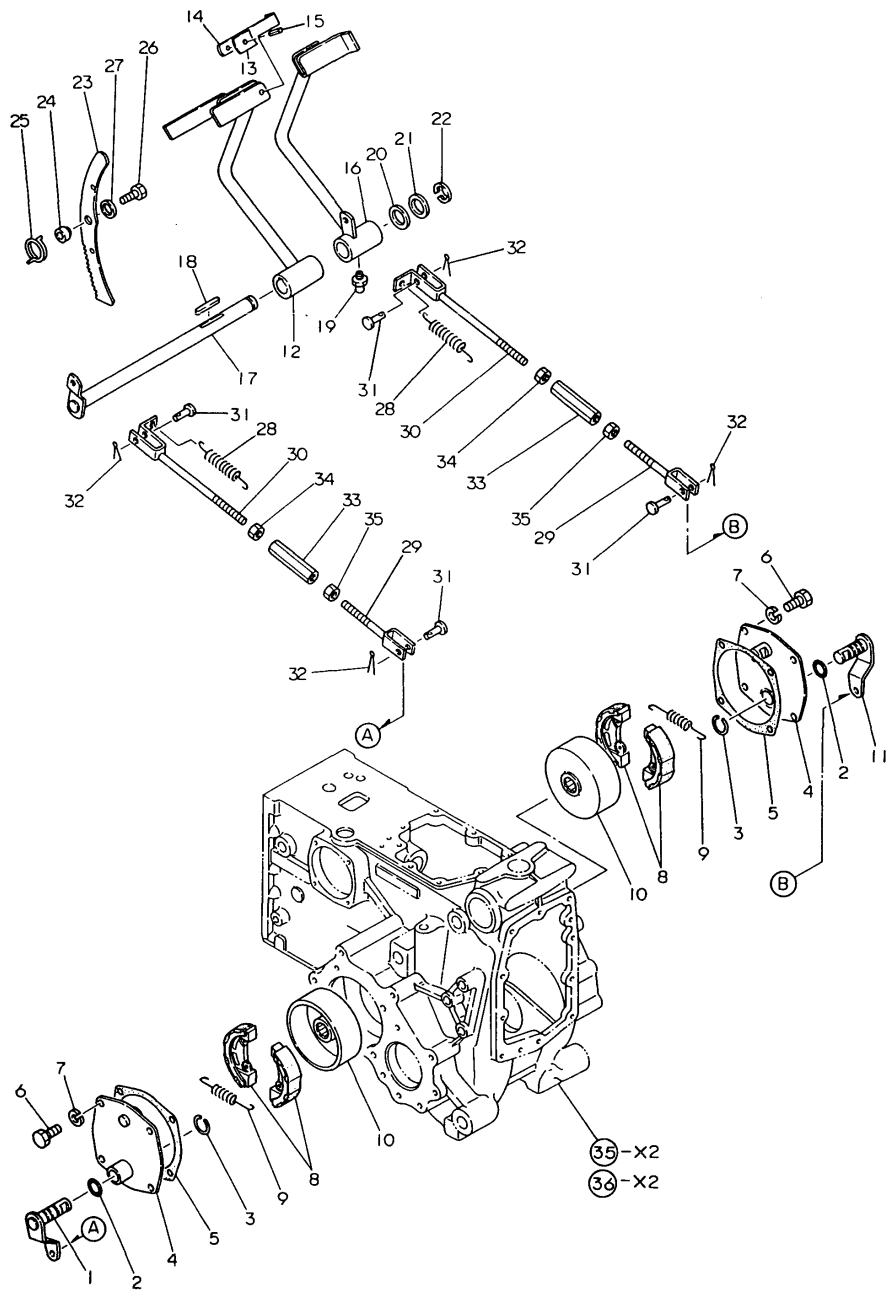

50. BRAKES

(A)=YM186 (FLOOR (D)=YM186D(COLUM
(B)=YM186D(FLOOR (E)=
(C)=YM186 (COLUM (F)=

REF.	LEV.	PARTS NO.	DESCRIPTION	Q'TY (A)	(B)	(C)	(D)	(E)	(F)	I	R
1	1	194446-36700-X	CAMSHAFT, BRAKE	1	1	1	1				
2	1	24341-000160	O-RING 1A S-16.0	4	4	4	4				
3	1	194200-36790	RING	2	2	2	2				
4	1	194300-36800-X	COVER, BRAKE CASE	2	2	2	2				
5	1	194300-36850	GASKET	2	2	2	2				
6	1	26116-080202	BOLT M 8X 20 PLATED	8	8	8	8				
7	1	22217-080000	SPRING WASHER 8	8	8	8	8				
8	1	194300-36500	SHOE, BRAKE	4	4	4	4				
8-1	1	194440-36530	SHOE, BRAKE	4	4	4	4			N	
	(A=T/# 00790)	(B=T/# 01965)	(C=T/# 20952) (D=T/# 42656)								
9	1	194200-36551	SPRING, RETURN	4	4	4	4				
10	1	194300-37110	DRUM, BRAKE	2	2	2	2				
11	1	194446-36750-X	CAMSHAFT, BRAKE	1	1	1	1				
12	1	194440-37420-X	PEDAL, BRAKE	1	1	1	1				
13	2	194150-37530	SPACER	1	1	1	1				
14	2	194440-37540-R	CONNECTOR	1	1	1	1				
15	2	22351-080018	SPRING PIN 8X18	1	1	1	1				
16	1	194440-37470-X	PEDAL, BRAKE	1	1	1	1				
17	1	194440-37550-X	SHAFT, BRAKE PEDAL	1	1	1	1				
18	1	22512-070400	KEY 7X 40	1	1	1	1				
19	1	24761-010000	NIPPLE M6F, GREASE	1	1	1	1				
20	1	194130-37560	WASHER	1	1	1	1				1
21	1	194150-37570	WASHER	1	1	1	1				1
22	1	22272-000190	CIRCLIP E-19	1	1	1	1				
23	1	194440-37660-X	LEVER, BRAKE LOCK	1	1	1	1				
24	1	194440-37670	COLLAR 11X25X14.5	1	1	1	1				
25	1	194110-37691	SPRING, RETURN	1	1	1	1				
26	1	26116-100302	BOLT M10X 30 PLATED	1	1	1	1				
26-1	1	26106-100302	BOLT M10X 30 PLATED	1	1	1	1			N	
	(A=T/# 00909)	(B=T/# 02372)	(C=T/# 20991) (D=T/# 42957)								
27	1	22157-100000	WASHER 10	1	1	1	1				
28	1	194150-37510	SPRING, RETURN	2	2	2	2				
29	1	194130-37740	ROD, BRAKE	2	2	2	2				
30	1	194151-37771	ROD, BRAKE	2	2	2	2				
31	1	194080-37781	PIN 8X25	4	4	4	4				
32	1	22417-200300	COTTER PIN 2.0X30	4	4	4	4				
33	1	194151-37730	TURNBUCKLE M10X90	2	2	2	2				
34	1	26716-100002	NUT M10	2	2	2	2				
35	1	194150-22480	NUT M10	2	2	2	2				

N:Old $\frac{\text{Yes}}{\text{No}}$ New, Q:Old $\frac{\text{No}}{\text{Yes}}$ New, R:Old $\frac{\text{Yes}}{\text{Yes}}$ New, S:Old $\frac{\text{No}}{\text{No}}$ New, W:Add, Z:Discontinued, F:Interchangeable by set, K:Q'ty Change

(C)Copy Rights YANMAR CO.,LTD.

Fig.51. HYDRAULIC ADAPTER(OPTIONAL)

Fig. 51 HYDRAULIC ADAPTER [Optional Parts]

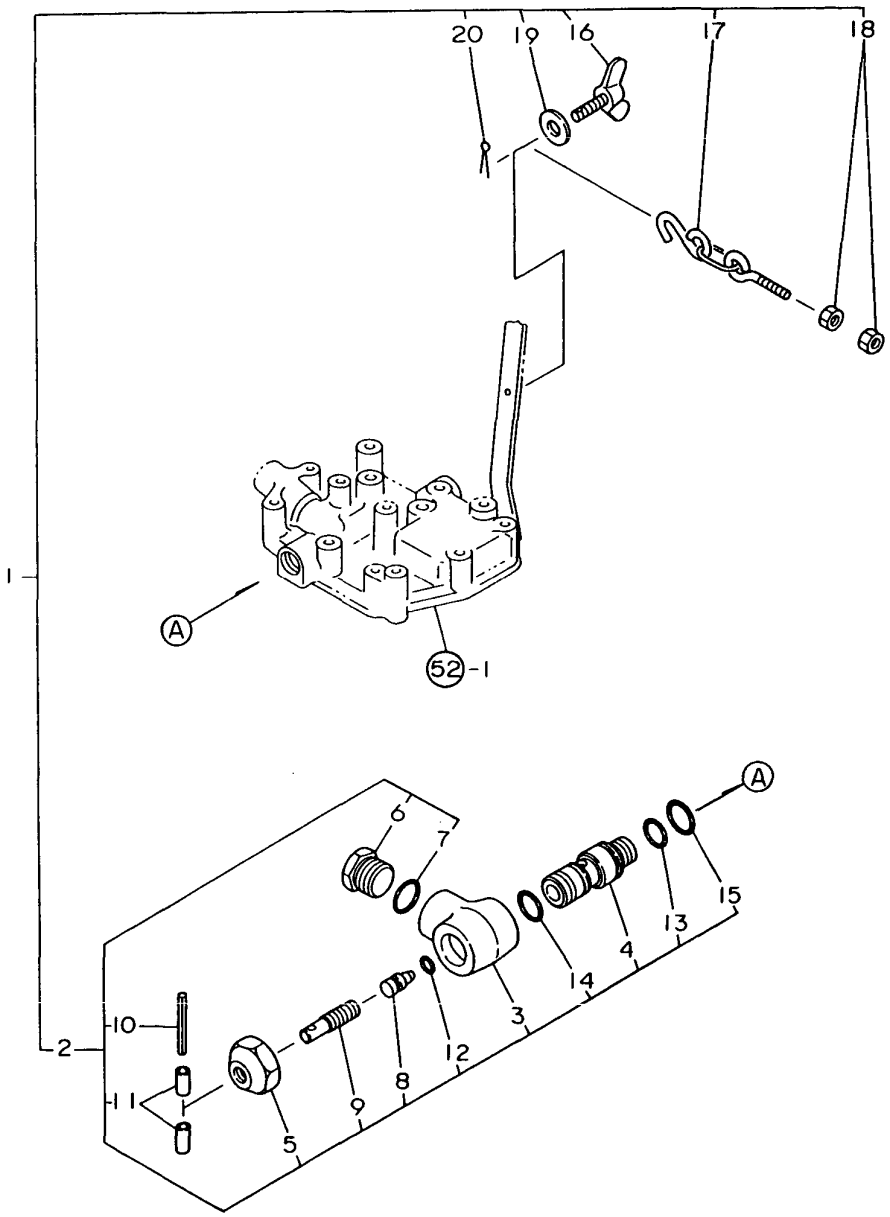

0CT10-G22801

51. HYDRAULIC ADAPTER(OPTIONAL)

(A)=YM186 (FLOOR
(B)=YM186D(FLOOR
(C)=YM186 (COLUM
(D)=YM186D(COLUM
(E)=
(F)=

REF.	LEV.	PARTS NO.	DESCRIPTION	Q'TY (A)	(B)	(C)	(D)	(E)	(F)	I	R
1	1	794446-43200	ADAPTER ASSY	1	1	1	1				
2	2	194446-43200	CONNECTOR ASSY	1	1	1	1				
3	3	194446-42210	CONNECTOR (A)	1	1	1	1				
4	3	194446-42220	SLEEVE	1	1	1	1				
5	3	194446-42230	END, CONNECTOR	1	1	1	1				
6	3	194464-45920	PLUG 3/4-16UNF	1	1	1	1				
7	3	194464-45930	O-RING 8-1	1	1	1	1				
8	3	194300-46611	VALVE, STOP	1	1	1	1				
9	3	194300-46640	SCREW	1	1	1	1				
10	3	22351-040040	SPRING PIN 4X40	1	1	1	1				
11	3	23062-030015	PIPE 3X 15	2	2	2	2				
12	3	24311-000070	O-RING 1A P-7.0	1	1	1	1				
13	3	24311-000150	O-RING 1A P-15.0	1	1	1	1				
14	3	24311-000160	O-RING 1A P-16.0	1	1	1	1				
15	3	24311-000180	O-RING 1A P-18.0	1	1	1	1				
16	2	194310-47850	WING BOLT	1	1	1	1				
17-1	2	194446-63910	CHAIN	1	1	1	1				
18	2	26716-060002	NUT M 6	2	2	2	2				
19	2	22157-060000	WASHER 6	1	1	1	1				
20	2	22417-200150	COTTER PIN 2.0X15	1	1	1	1				

N:Old $\frac{\text{Yes}}{\text{No}}$ New, Q:Old $\frac{\text{No}}{\text{Yes}}$ New, R:Old $\frac{\text{Yes}}{\text{Yes}}$ New, S:Old $\frac{\text{No}}{\text{No}}$ New, W:Add, Z:Discontinued, F:Interchangeable by set, K:Q'ty Change

(C)Copy Rights YANMAR CO.,LTD.

Fig.52. HYDRAULIC CYLINDER CASE

Fig. 52 HYDRAULIC CYLINDER CASE

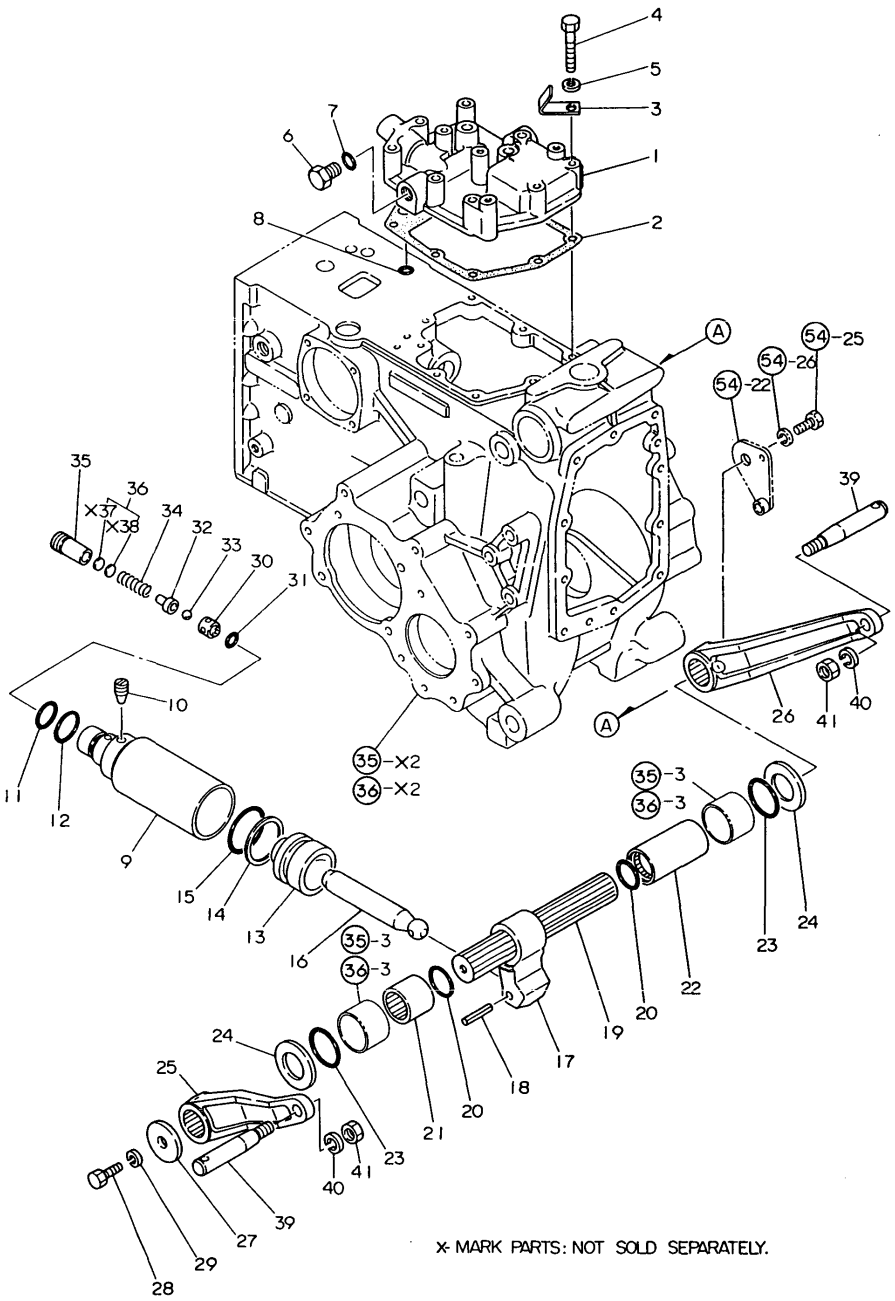

52. HYDRAULIC CYLINDER CASE

(A)=YM186 (FLOOR (D)=YM186D(COLUM
(B)=YM186D(FLOOR (E)=
(C)=YM186 (COLUM (F)=

REF.	LEV.	PARTS NO.	DESCRIPTION	Q'TY (A)	(B)	(C)	(D)	(E)	(F)	I	R
1	1	194300-42110-X	HOUSING, HYDRAULIC	1	1	1	1				
1-1	1	194300-42111-X	HOUSING, HYDRAULIC	1	1	1	1				N
	(A=FXXXXX)	(B=FXXXXX)	(C=FXXXXX) (D=FXXXXX)								
2	1	194300-42120	GASKET	1	1	1	1				
3	1	1A1040-26170	HOOK, WIRE	2	2	2	2				
4	1	26116-080552	BOLT M 8X 55 PLATED	8	8	8	8				
5	1	22217-080000	SPRING WASHER 8	8	8	8	8				
6	1	194200-43161	PLUG 18	1	1	1	1				
7	1	24311-000150	O-RING 1A P-15.0	1	1	1	1				
8	1	24311-000100	O-RING 1A P-10.0	1	1	1	1				
9	1	194440-43100	CYLINDER ASSY, HYD.	1	1	1	1				
10	1	194300-43240	BOLT	1	1	1	1				
11	1	194300-43220	O-RING 2030	1	1	1	1				
12	1	194300-43230	O-RING 2033	1	1	1	1				
13	1	194440-43310	PISTON, HYDRAULIC	1	1	1	1				
14	1	194440-43330	RING P50, BACK UP	1	1	1	1				
15	1	24315-570500	O-RING 1B P-50A	1	1	1	1				
16	1	194300-43410	ROD, PISTON	1	1	1	1				
17	1	194440-44110	CRANK, LIFT	1	1	1	1				
17-1	1	194440-44111	CRANK, LIFT	1	1	1	1				N
	(A=*1980.)	(B=*1980.)	(C=*1980.) (D=*1980.)								
17-2	1	194440-44112	CRANK, LIFT	1	1	1	1				N
	(A=T/# 00820)	(B=T/# 02048)	(C=T/# 20967) (D=T/# 42778)								
18	1	22351-050040	SPRING PIN 5X40	1	1	1	1				
19	1	194300-44210	SHAFT, LIFT	1	1	1	1				
20	1	24341-000360	O-RING 1A S-36.0	2	2	2	2				
21	1	194300-44250	SLEEVE, LIFT SHAFT	1	1	1	1				
22	1	194300-44260	SLEEVE, LIFT SHAFT	1	1	1	1				
23	1	24321-000450	O-RING 1A G-45.0	2	2	2	2				
24	1	194300-44230	LINER 35X60X3	2	2	2	2				
25	1	194446-44410-X	ARM (L), LIFT	1	1	1	1				
25-1	1	194446-44411	ARM (L), LIFT	1	1	1	1				N
	(A=T/# 00860)	(B=T/# 02184)	(C=T/# 20958) (D=T/# 42861)								
25-2	1	194195-44411	ARM,ROCKSHAFT	1	1	1	1				N
	(A=T/# 00894)	(B=T/# 02355)	(C=T/# 20991) (D=T/# 42957)								
26	1	194446-44420-X	ARM (R), LIFT	1	1	1	1				
26-1	1	194446-44421	ARM (R), LIFT	1	1	1	1				N
	(A=T/# 00860)	(B=T/# 02184)	(C=T/# 20958) (D=T/# 42861)								
26-2	1	194195-44411	ARM,ROCKSHAFT	1	1	1	1				N
	(A=T/# 00894)	(B=T/# 02355)	(C=T/# 20991) (D=T/# 42957)								
27	1	194446-44450-X	WASHER 10.5X50X6	1	1	1	1				
28	1	26116-100202	BOLT M10X 20 PLATED	1	1	1	1				
29	1	22217-100000	SPRING WASHER 10	1	1	1	1				
30	1	194151-46261	SEAT, RELIEF VALVE	1	1	1	1				
31	1	24311-000120	O-RING 1A P 12.0	1	1	1	1				
32	1	194150-45361	HOLDER, RELIEF VALVE	1	1	1	1				
33	1	24190-080003	BALL 1/4	1	1	1	1				
34	1	194310-46450	SPRING	1	1	1	1				
34-1	1	194150-45320	SPRING, RELIEF VALVE	1	1	1	1				N
	(A=*1980.)	(B=*1980.)	(C=*1980.) (D=*1980.)								
35	1	194310-46460	HOLDER, SPRING	1	1	1	1				

N:Old $\frac{\text{Yes}}{\text{No}}$ New, Q:Old $\frac{\text{No}}{\text{Yes}}$ New, R:Old $\frac{\text{Yes}}{\text{Yes}}$ New, S:Old $\frac{\text{No}}{\text{No}}$ New, W:Add, Z:Discontinued, F:Interchangeable by set, K:Q'ty Change

++ CONTINUE ++

(C)Copy Rights YANMAR CO.,LTD.

Fig.52. HYDRAULIC CYLINDER CASE

Fig. 52 HYDRAULIC CYLINDER CASE

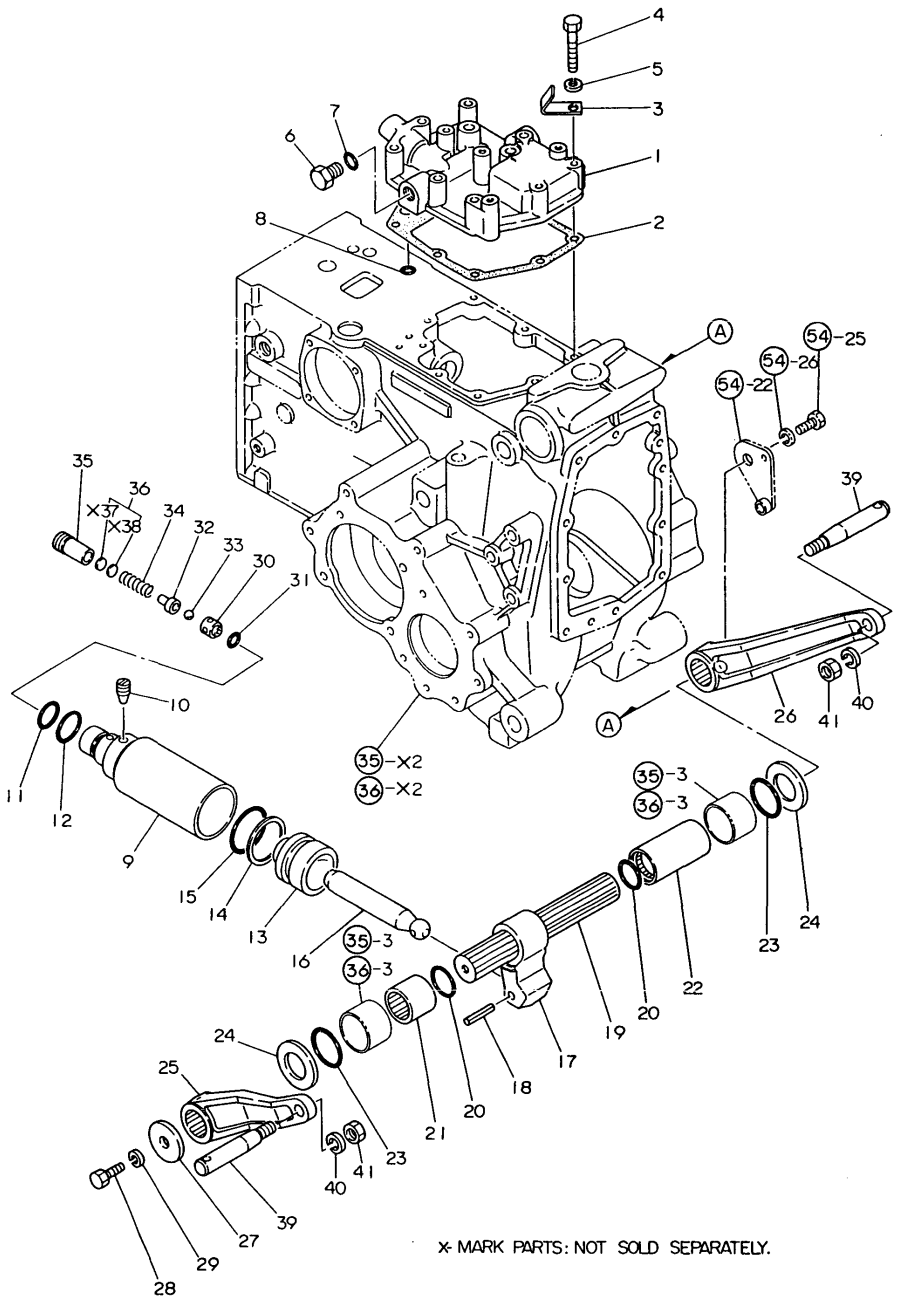

52. HYDRAULIC CYLINDER CASE

(A)=YM186 (FLOOR (D)=YM186D(COLUM
(B)=YM186D(FLOOR (E)=
(C)=YM186 (COLUM (F)=

REF.	LEV.	PARTS NO.	DESCRIPTION	Q'TY (A)	(B)	(C)	(D)	(E)	(F)	I	R
36	1	110250-53150	SHIM SET	1	1	1	1				
39	1	194130-44480	PIN, LIFT ARM	2	2	2	2			W	
	(A=FROM 1ST)	(B=FROM 1ST)	(C=FROM 1ST) (D=FROM 1ST)								
40-1	1	22217-160000	SPRING WASHER 16	2	2	2	2			W	
	(A=FROM 1ST)	(B=FROM 1ST)	(C=FROM 1ST) (D=FROM 1ST)								
41	1	26736-120002	NUT M12	2	2	2	2				M
41-1	1	26736-160002	NUT M16	2	2	2	2			W	
	(A=FROM 1ST)	(B=FROM 1ST)	(C=FROM 1ST) (D=FROM 1ST)								

N:Old $\frac{\text{Yes}}{\text{No}}$ New, Q:Old $\frac{\text{No}}{\text{Yes}}$ New, R:Old $\frac{\text{Yes}}{\text{Yes}}$ New, S:Old $\frac{\text{No}}{\text{No}}$ New, W:Add, Z:Discontinued, F:Interchangeable by set, K:Q'ty Change

(C)Copy Rights YANMAR CO.,LTD.

Fig.53. CONTROL VALVE

Fig. 53 CONTROL VALVE

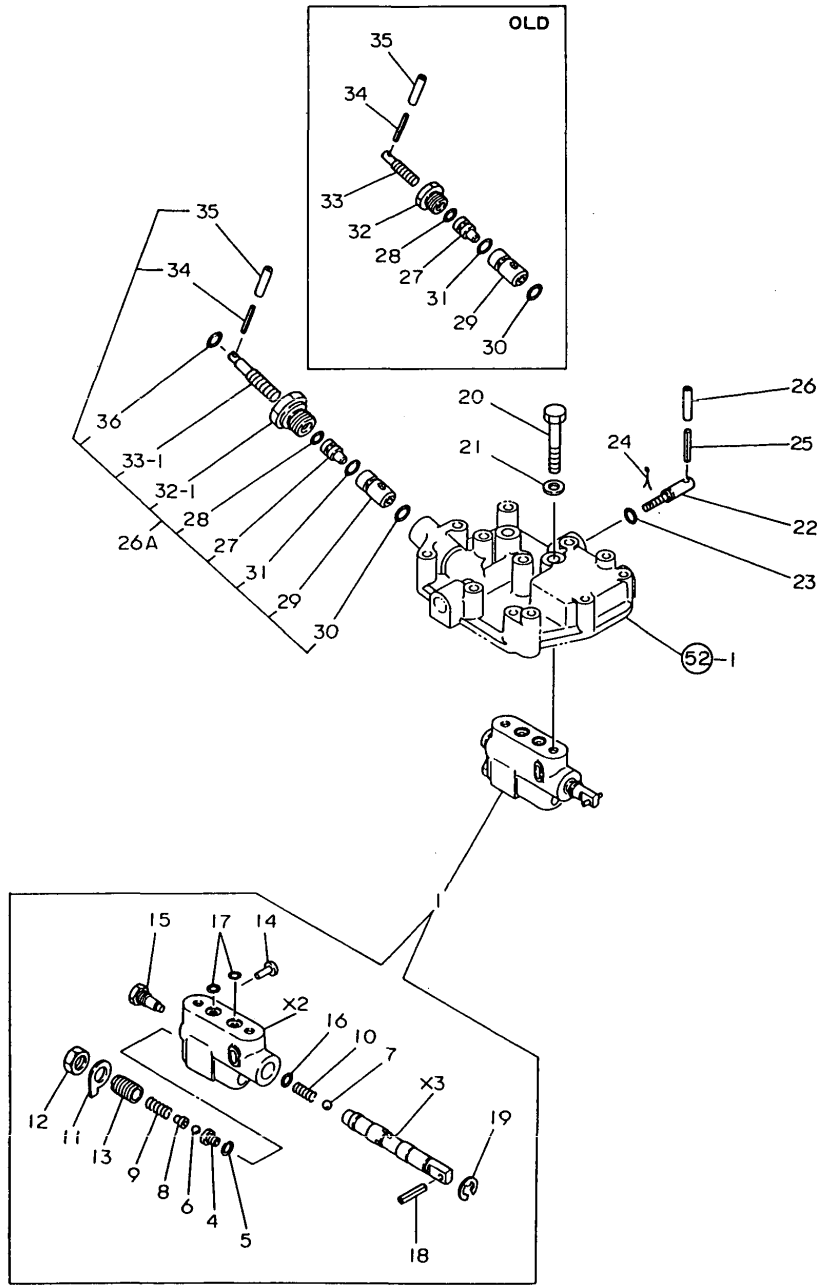

0CT10-G22801

53. CONTROL VALVE

(A)=YM186 (FLOOR (D)=YM186D(COLUM
(B)=YM186D(FLOOR (E)=
(C)=YM186 (COLUM (F)=

REF.	LEV.	PARTS NO.	DESCRIPTION	Q'TY (A)	(B)	(C)	(D)	(E)	(F)	I	R
1	1	194300-45100-X	VALVE ASSY, CONTROL	1	1	1	1				
4	2	194201-45160	SEAT	1	1	1	1				
5	2	194201-45280	RING, STOP	1	1	1	1				
6	2	24190-100003	BALL 5/16	1	1	1	1				
7	2	24190-120003	BALL 3/8	1	1	1	1				
8	2	194300-45240	SEAT, SPRING	1	1	1	1				
9	2	194300-45170	SPRING	1	1	1	1				
10	2	194200-45260	SPRING	1	1	1	1				
11	2	194200-45210	WASHER	1	1	1	1				
12	2	194200-45190	LOCK NUT	1	1	1	1				
13	2	194200-45180	ADJUSTER	1	1	1	1				
14	2	194200-45150	ADJUSTER	1	1	1	1				
15	2	194201-45270	PLUG	1	1	1	1				
16	2	24315-000050	O-RING 1B P-5.0	1	1	1	1				
17	2	24311-000140	O-RING 1A P-14.0	2	2	2	2				
18	2	22351-060025	SPRING PIN 6X25	1	1	1	1				
19	2	22272-000100	CIRCLIP E-10	1	1	1	1				
20	1	194300-45350	BOLT M12	2	2	2	2				
21	1	23414-120000	GASKET 12, ROUND	2	2	2	2				
22	1	194300-46110	SCREW	1	1	1	1				
23	1	24311-000070	O-RING 1A P-7.0	1	1	1	1				
24	1	22417-200200	COTTER PIN 2.0X20	1	1	1	1				
25	1	22351-040040	SPRING PIN 4X40	1	1	1	1				
26	1	23062-030015	PIPE 3X 15	1	1	1	1				
26A	1	194500-46300	VALVE KIT, STOP	1	1	1	1				W
	(A=T/# 00831)	(B=T/# 02068)	(C=T/# 20967)	(D=T/# 42828)							
27	2	194300-46611	VALVE, STOP	1	1	1	1				
28	2	24311-000070	O-RING 1A P-7.0	1	1	1	1				
29	2	194300-46621	SEAT, VALVE	1	1	1	1				
30	2	24311-000120	O-RING 1A P 12.0	1	1	1	1				
31	2	24341-000140	O-RING 1A S-14.0	1	1	1	1				
32	2	194300-46630	GUIDE, VALVE	1	1	1	1				
32-1	2	194500-46630	HOLDER, VALVE	1	1	1	1				S
	(A=T/# 00831)	(B=T/# 02068)	(C=T/# 20967)	(D=T/# 42828)							
33	2	194300-46640	SCREW	1	1	1	1				
33-1	2	194500-46640	BOLT, STOP	1	1	1	1				S
	(A=T/# 00831)	(B=T/# 02068)	(C=T/# 20967)	(D=T/# 42828)							
34	2	22351-040040	SPRING PIN 4X40	1	1	1	1				
35	2	23062-030015	PIPE 3X 15	1	1	1	1				
36	2	24311-000080	O-RING 1A P-8.0	1	1	1	1				W
	(A=T/# 00831)	(B=T/# 02068)	(C=T/# 20967)	(D=T/# 42828)							

N:Old $\frac{\text{Yes}}{\text{No}}$ New, Q:Old $\frac{\text{No}}{\text{Yes}}$ New, R:Old $\frac{\text{Yes}}{\text{Yes}}$ New, S:Old $\frac{\text{No}}{\text{No}}$ New, W:Add, Z:Discontinued, F:Interchangeable by set, K:Q'ty Change

(C)Copy Rights YANMAR CO.,LTD.

Fig.54. HYDRAULIC CONTROL LEVER

Fig. 54 HYDRAULIC CONTROL LEVER

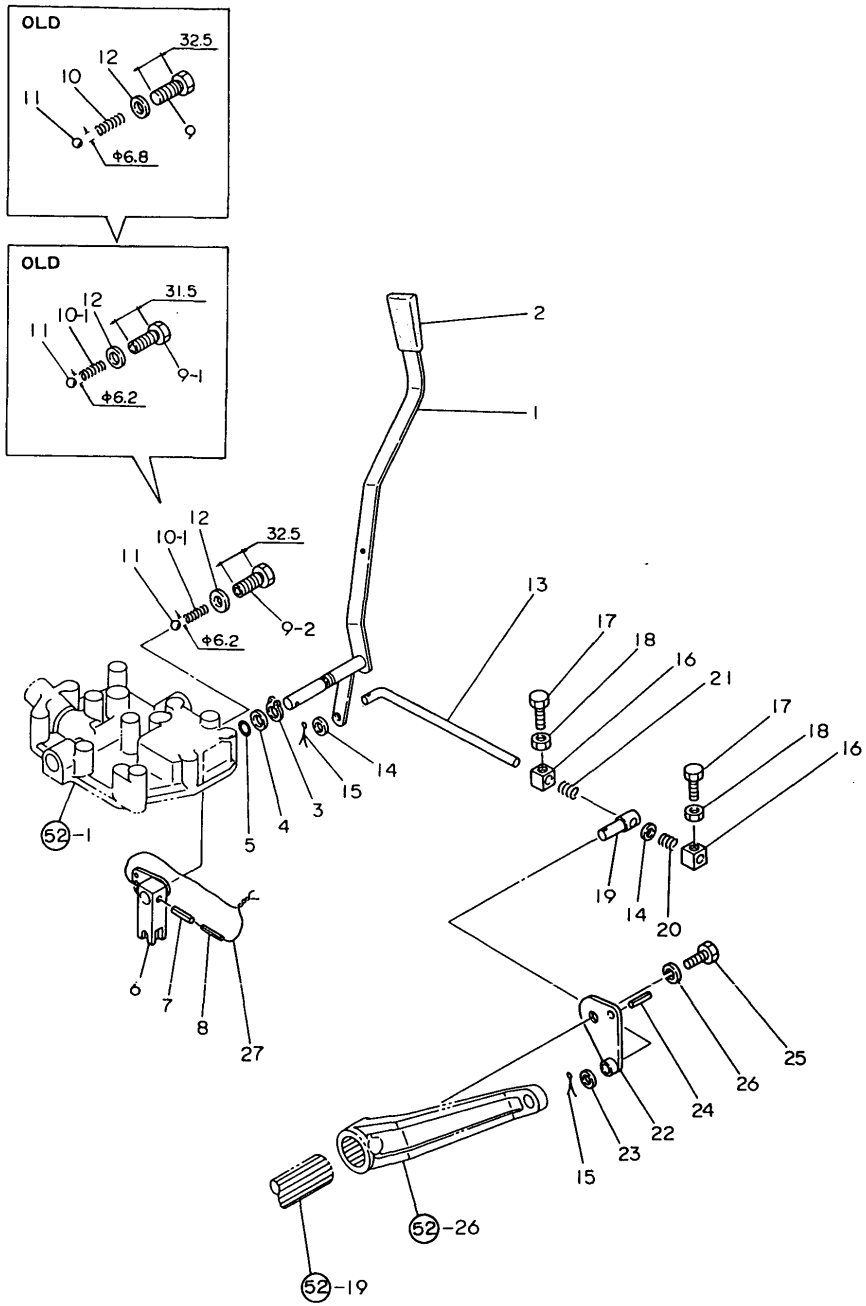

0CT10-G22801

54. HYDRAULIC CONTROL LEVER

(A)=YM186 (FLOOR (D)=YM186D(COLUM
(B)=YM186D(FLOOR (E)=
(C)=YM186 (COLUM (F)=

REF.	LEV.	PARTS NO.	DESCRIPTION	Q'TY (A)	(B)	(C)	(D)	(E)	(F)	I	R
1	1	194446-44700-X	LEVER, CONTROL	1	1	1	1				
2	1	194150-47621	KNOB	1	1	1	1				
3	1	22242-000140	CIRCLIP 14	1	1	1	1				
4	1	194300-44760	LINER	1	1	1	1				
5	1	24341-000120	O-RING 1A S-12.0	1	1	1	1				
6	1	194300-44811	FORK, CONTROL LEVER	1	1	1	1				
7	1	22351-050025	SPRING PIN 5X25	1	1	1	1				
8	1	22351-030025	SPRING PIN 3X25	1	1	1	1				
9	1	194446-44910	RETAINER	1	1	1	1				
9-1	1	194446-44911	RETAINER	1	1	1	1			S	1
	(A=T/# 00510)	(B=T/# 01215)									
9-2	1	194446-44912	RETAINER	1	1	1	1			N	
	(A=*1981.03)	(B=*1981.03)	(C=*1981.03) (D=*1981.03)								
10	1	194446-44930	SPRING	1	1						
10-1	1	194446-44931	SPRING	1	1	1	1			S	1
	(A=T/# 00510)	(B=T/# 01215)									
11	1	24190-080001	BALL 1/4, STEEL	1	1	1	1				
12	1	23414-120000	GASKET 12, ROUND	1	1	1	1				
13	1	194446-44610	ROD	1	1	1	1				
14	1	22137-080000	WASHER 8, POLISHED	2	2	2	2				
15	1	22417-200200	COTTER PIN 2.0X20	2	2	2	2				
16	1	194200-47620	STOPER	2	2	2	2				
17	1	26116-060162	BOLT M 6X 16 PLATED	2	2	2	2				
18	1	26716-060002	NUT M 6	2	2	2	2				
19	1	194300-44550	PIN, AUTO-STOPPER	1	1	1	1				
20	1	194440-44660	SPRING, RETURN	1	1	1	1				
20-1	1	1C6054-82140	SPRING	2	2	2	2			N	
	(A=T/# 00867)	(B=T/# 02284)	(C=T/# 20972) (D=T/# 42891)								
21	1	1C6120-63190	SPRING	1	1	1	1				
22	1	194446-44510-X	ARM, FEED BACK	1	1	1	1				
23	1	22137-100000	WASHER 10,POLISHED	1	1	1	1				
24	1	22351-060016	SPRING PIN 6X16	1	1	1	1				
25	1	26116-100202	BOLT M10X 20 PLATED	1	1	1	1				
26	1	22217-100000	SPRING WASHER 10	1	1	1	1				
27	1	22451-160100	WIRE 1.6X 100	1	1	1	1			W	
	(A=T/# 00414)	(B=T/# 00839)	(C=FROM 1ST) (D=FROM 1ST)								
27-1	1	22451-160000	WIRE 1.6	1	1	1	1			N	
	(A=*)	(B=*)	(C=*) (D=*)								

N:Old $\frac{\text{Yes}}{\text{No}}$ New, Q:Old $\frac{\text{No}}{\text{Yes}}$ New, R:Old $\frac{\text{Yes}}{\text{Yes}}$ New, S:Old $\frac{\text{No}}{\text{No}}$ New, W:Add, Z:Discontinued, F:Interchangeable by set, K:Q'ty Change

(C)Copy Rights YANMAR CO.,LTD.

Fig.55. HYDRAULIC PIPES

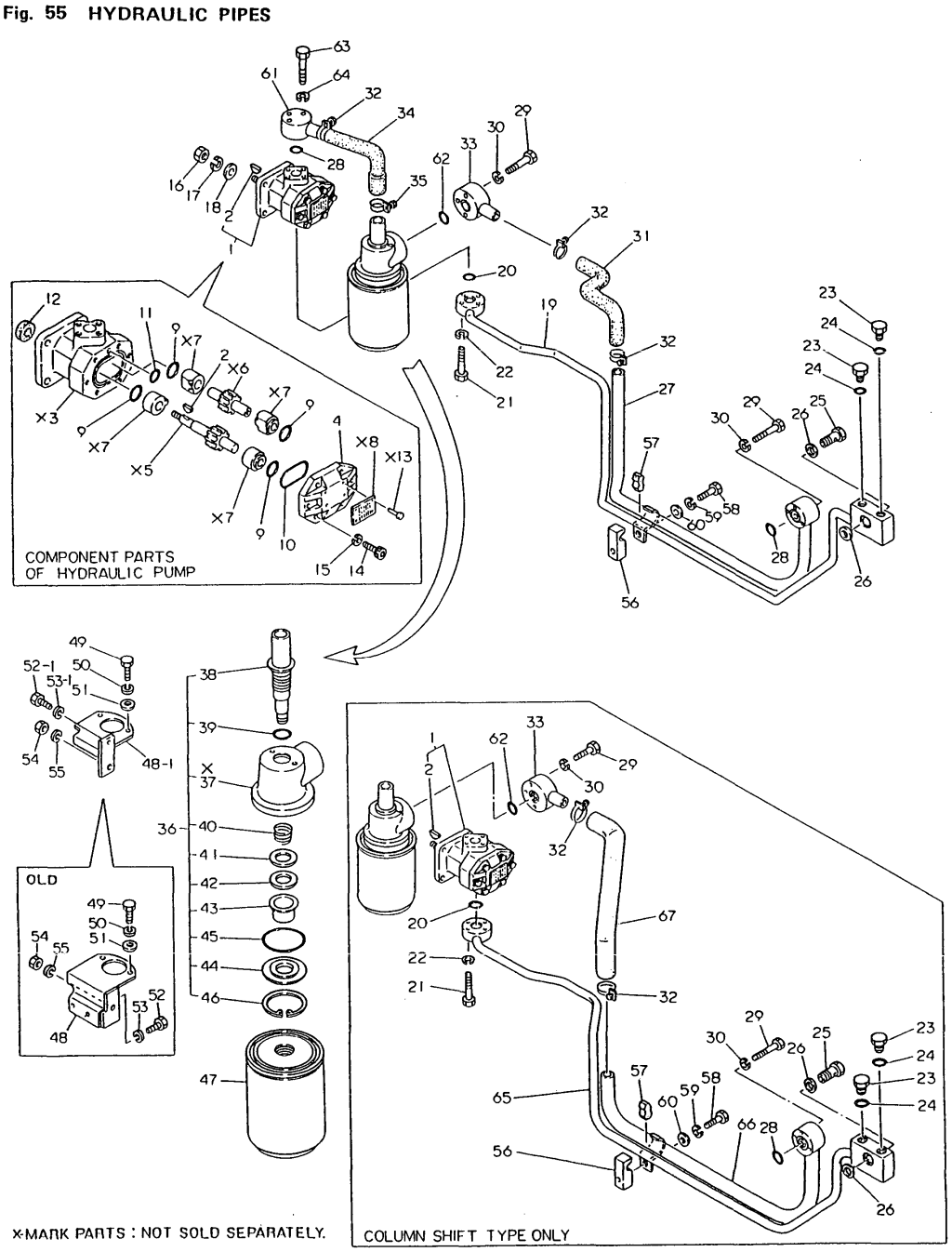

55. HYDRAULIC PIPES

(A)=YM186 (FLOOR (D)=YM186D(COLUM
(B)=YM186D(FLOOR (E)=
(C)=YM186 (COLUM (F)=

REF.	LEV.	PARTS NO.	DESCRIPTION	Q'TY (A)	(B)	(C)	(D)	(E)	(F)	I	R
1	1	194130-41120-X	PUMP ASSY, HYDRAULIC	1	1	1	1				
2	2	22522-030130	WOODRUFF KEY 3X13	1	1	1	1				
4	2	194320-41150	COVER	1	1	1	1				
9	2	24315-000200	O-RING 1B P-20.0	4	4	4	4				
10	2	24341-000480	O-RING 1A S-48.0	1	1	1	1				
11	2	24341-000100	O-RING 1A S-10.0	1	1	1	1				
12	2	194320-41160	SEAL TC14 25 7, OIL	1	1	1	1				
12-1	2	24421-142507	SEAL TC14 25 07, OIL	1	1	1	1				R
	(A=T/# 00815)	(B=T/# 02019)	(C=T/# 20956) (D=T/# 42749)								
14	2	26450-080252	BOLT M 8X 25	6	6	6	6				
15	2	22217-080000	SPRING WASHER 8	6	6	6	6				
16	1	194990-20180	NUT	1	1	1	1				
16-1	1	26716-080002	NUT M 8	1	1	1	1				N
	(A=T/# 00713)	(B=T/# 01611)	(C=T/# 20858) (D=T/# 41924)								
17	1	22217-080000	SPRING WASHER 8	1	1	1	1				
18	1	194100-41670	WASHER 8.5X18X2	1	1	1	1				
19	1	194446-48110-X	PIPE, HIGH-PRESSURE	1	1						Z
	(A=*)	(B=*)									
20	1	24311-000200	O-RING 1A P-20.0	1	1	1	1				
21	1	26116-060352	BOLT M 6X 35 PLATED	4	4	4	4				
21-1	1	26013-060352	BOLT M 6X 35	4	4	4	4				N
	(A=*)	(B=*)	(C=*) (D=*)								
21-2	1	26106-060352	BOLT M 6X 35 PLATED	4	4	4	4				N
	(A=T/# 00898)	(B=T/# 02355)	(C=T/# 20991) (D=T/# 42957)								
22	1	22217-060000	SPRING WASHER 6	4	4	4	4				Z
	(A=*)	(B=*)	(C=*) (D=*)								
23	1	194464-45920	PLUG 3/4-16UNF	2	2	2	2				
24	1	194464-45930	O-RING 8-1	2	2	2	2				
25	1	194446-48650	BOLT 12, JOINT	1	1	1	1				
26	1	23414-180023	GASKET 18	2	2	2	2				
27	1	194446-48240-X	PIPE, LOW PRESSURE	1	1	1	1				
28	1	24311-000200	O-RING 1A P-20.0	2	2	2	2				
29	1	26116-060402	BOLT M 6X 40 PLATED	6	6	6	6				
29-1	1	26013-060402	BOLT M 6X 40	6	6	6	6				N
	(A=*)	(B=*)	(C=*) (D=*)								
29-2	1	26106-060402	BOLT M 6X 40 PLATED	6	6	6	6				N
	(A=T/# 00898)	(B=T/# 02355)	(C=T/# 20991) (D=T/# 42957)								
30	1	22217-060000	SPRING WASHER 6	6	6						Z
	(A=*1980.12)	(B=*1980.12)									
31	1	194446-48250-X	RUBBER PIPE	1	1						Z
	(A=*1980.12)	(B=*1980.12)									
32	1	194151-48710	CLAMP	3	3	3	3				
33	1	194446-48220-X	PIPE, LOW PRESSURE	1	1	1	1				
34	1	194446-48230-X	RUBBER PIPE	1	1	1	1				
35	1	23010-035000	CLAMP 35	1	1	1	1				
35-1	1	194464-48220	CLAMP 37	1	1	1	1				N
	(A=T/# 00860)	(B=T/# 02184)	(C=T/# 20958) (D=T/# 42861)								
36	1	194464-48300-X	COVER ASSY, FILTER	1	1	1	1				
38	2	194464-48331	BOLT, FILTER	1	1	1	1				
39	2	24311-000280	O-RING 1A P-28.0	1	1	1	1				
40	2	194464-48370	SPRING, FILTER	1	1	1	1				

N:Old $\xleftarrow[\text{No}]{\text{Yes}}$ New, Q:Old $\xleftarrow[\text{Yes}]{\text{No}}$ New, R:Old $\xleftarrow[\text{Yes}]{\text{Yes}}$ New, S:Old $\xleftarrow[\text{No}]{\text{No}}$ New, W:Add, Z:Discontinued, F:Interchangeable by set, K:Q'ty Change

++ CONTINUE ++

(C)Copy Rights YANMAR CO.,LTD.

Fig.55. HYDRAULIC PIPES

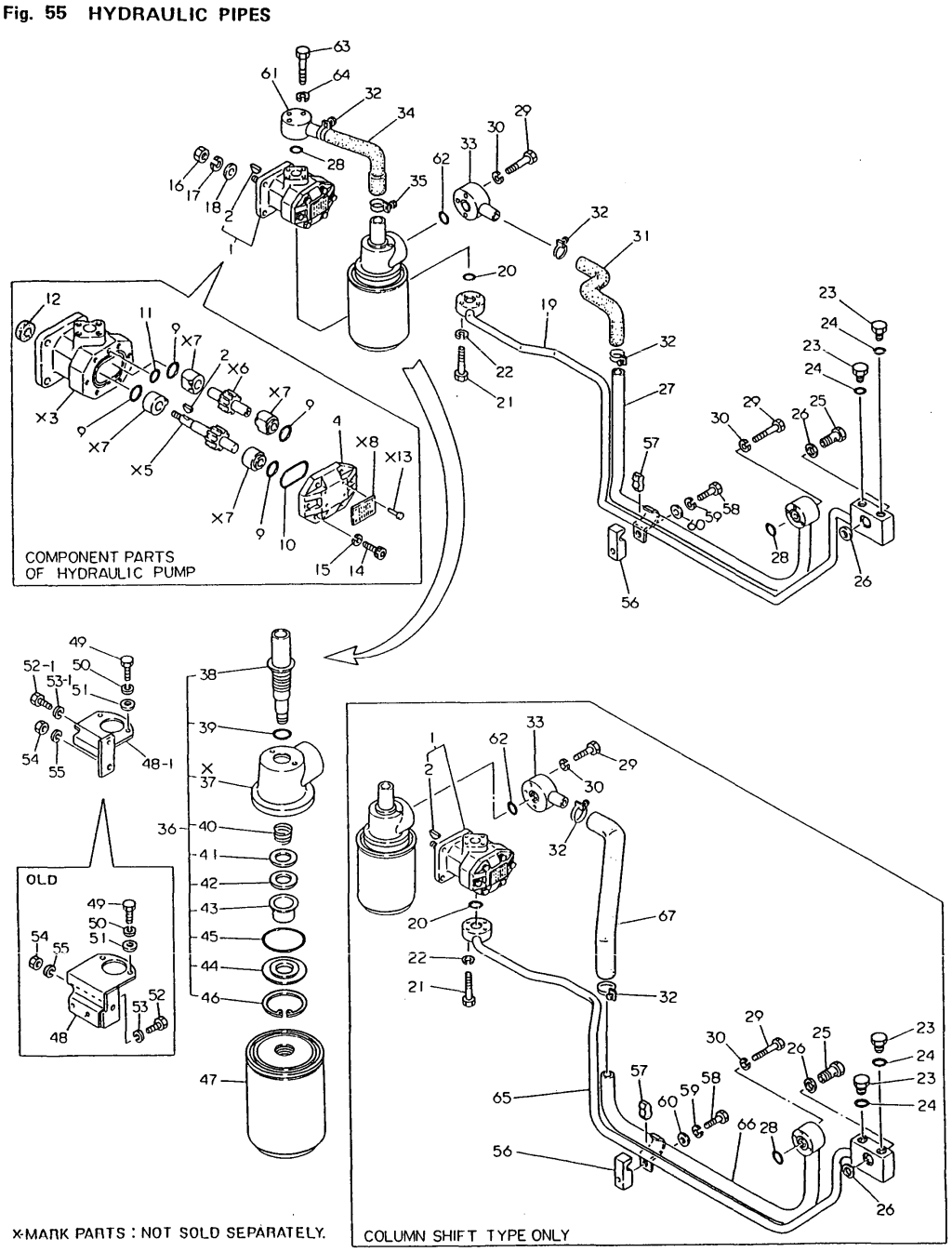

55. HYDRAULIC PIPES

(A)=YM186 (FLOOR (D)=YM186D(COLUM
(B)=YM186D(FLOOR (E)=
(C)=YM186 (COLUM (F)=

REF.	LEV.	PARTS NO.	DESCRIPTION	Q'TY (A)	(B)	(C)	(D)	(E)	(F)	I	R
41	2	194464-48361	WASHER 21.5X35X1.6	1	1	1	1				
42	2	194464-48390	GASKET	1	1	1	1				
43	2	194464-48341	COLLAR, SEAL	1	1	1	1				
44	2	194464-48351	SPACER 56	1	1	1	1				
45	2	24341-000560	O-RING 1A S-56.0	1	1					Z	
	(A=T/# 00510)	(B=T/# 01204)									
46	2	22252-000600	CIRCLIP 60	1	1	1	1				
47	1	194464-48310	FILTER, HYDRAULIC	1	1	1	1				
48	1	194446-48380-X	BRACKET, STRAINER	1	1						
48-1	1	194446-48381-X	BRACKET, STRAINER	1	1	1	1			S	
	(A=T/# 00229)	(B=T/# 00600)									
49	1	26116-080222	BOLT M 8X 22 PLATED	2	2	2	2				
49-1	1	26013-080202	BOLT W/WASHER M8X20	2	2	2	2			N	
	(A=*1982.09)	(B=*1982.09)	(C=*1982.09) (D=*1982.09)								
49-2	1	26106-080202	BOLT M 8X 20 PLATED	2	2	2	2			N	
	(A=T/# 00909)	(B=T/# 02372)	(C=T/# 20991) (D=T/# 42957)								
50	1	22217-080000	SPRING WASHER 8	2	2	2	2			Z	
	(A=*1982.09)	(B=*1982.09)	(C=*1982.09) (D=*1982.09)								
51	1	22137-080000	WASHER 8, POLISHED	2	2	2	2			Z	
	(A=*)	(B=*)	(C=*) (D=*)								
52	1	26116-060162	BOLT M 6X 16 PLATED	2	2						
52-1	1	26116-080302	BOLT M 8X 30 PLATED	1	1	1	1			S	
	(A=T/# 00229)	(B=T/# 00600)									
52-2	1	26106-080302	BOLT M 8X 30 PLATED	1	1	1	1			N	
	(A=T/# 00909)	(B=T/# 02372)	(C=T/# 20991) (D=T/# 42957)								
53	1	22217-060000	SPRING WASHER 6	2	2						
53-1	1	22217-080000	SPRING WASHER 8	1	1	1	1			S	
	(A=T/# 00229)	(B=T/# 00600)									
53-2	1	22217-080000	SPRING WASHER 8	1	1	1	1			Z	
	(A=T/# 00909)	(B=T/# 02372)	(C=T/# 20991) (D=T/# 42957)								
54	1	26716-100002	NUT M10	1	1	1	1				
55	1	22217-100000	SPRING WASHER 10	1	1	1	1				
56	1	194440-48830	RETAINER	1	1	1	1				
57	1	194440-48840	RUBBER	1	1	1	1				
58	1	26116-080352	BOLT M 8X 35	1	1	1	1				
58-1	1	26013-080352	BOLT M 8X 35			1	1			N	
	(A=*)	(B=*)	(C=*) (D=*)								
58-2	1	26106-080352	BOLT M 8X 35 PLATED	1	1	1	1			N	
	(A=T/# 00909)	(B=T/# 02372)	(C=T/# 20991) (D=T/# 42957)								
59	1	22217-080000	SPRING WASHER 8	1	1	1	1			Z	
	(A=*)	(B=*)	(C=*) (D=*)								
60	1	22137-080000	WASHER 8, POLISHED	1	1	1	1			Z	
	(A=T/# 00909)	(B=T/# 02372)	(C=T/# 20991) (D=T/# 42957)								
61	1	194440-48210	PIPE, LOW PRESSURE	1	1	1	1				
62	1	24311-000220	O-RING 1A P-22.0	1	1	1	1				
63	1	26116-060402	BOLT M 6X 40 PLATED	3	3	3	3				
63-1	1	26013-060402	BOLT M 6X 40	3	3	3	3			N	
	(A=*)	(B=*)	(C=*) (D=*)								
63-2	1	26106-060402	BOLT M 6X 40 PLATED	3	3	3	3			N	
	(A=T/# 00898)	(B=T/# 02355)	(C=T/# 20991) (D=T/# 42957)								
64	1	22217-060000	SPRING WASHER 6	3	3	3	3			Z	

N:Old $\frac{\text{Yes}}{\text{No}}$ New, Q:Old $\frac{\text{No}}{\text{Yes}}$ New, R:Old $\frac{\text{Yes}}{\text{Yes}}$ New, S:Old $\frac{\text{No}}{\text{No}}$ New, W:Add, Z:Discontinued, F:Interchangeable by set, K:Q'ty Change

++ CONTINUE ++

(C)Copy Rights YANMAR CO.,LTD.

Fig.55. HYDRAULIC PIPES

Fig. 55 HYDRAULIC PIPES

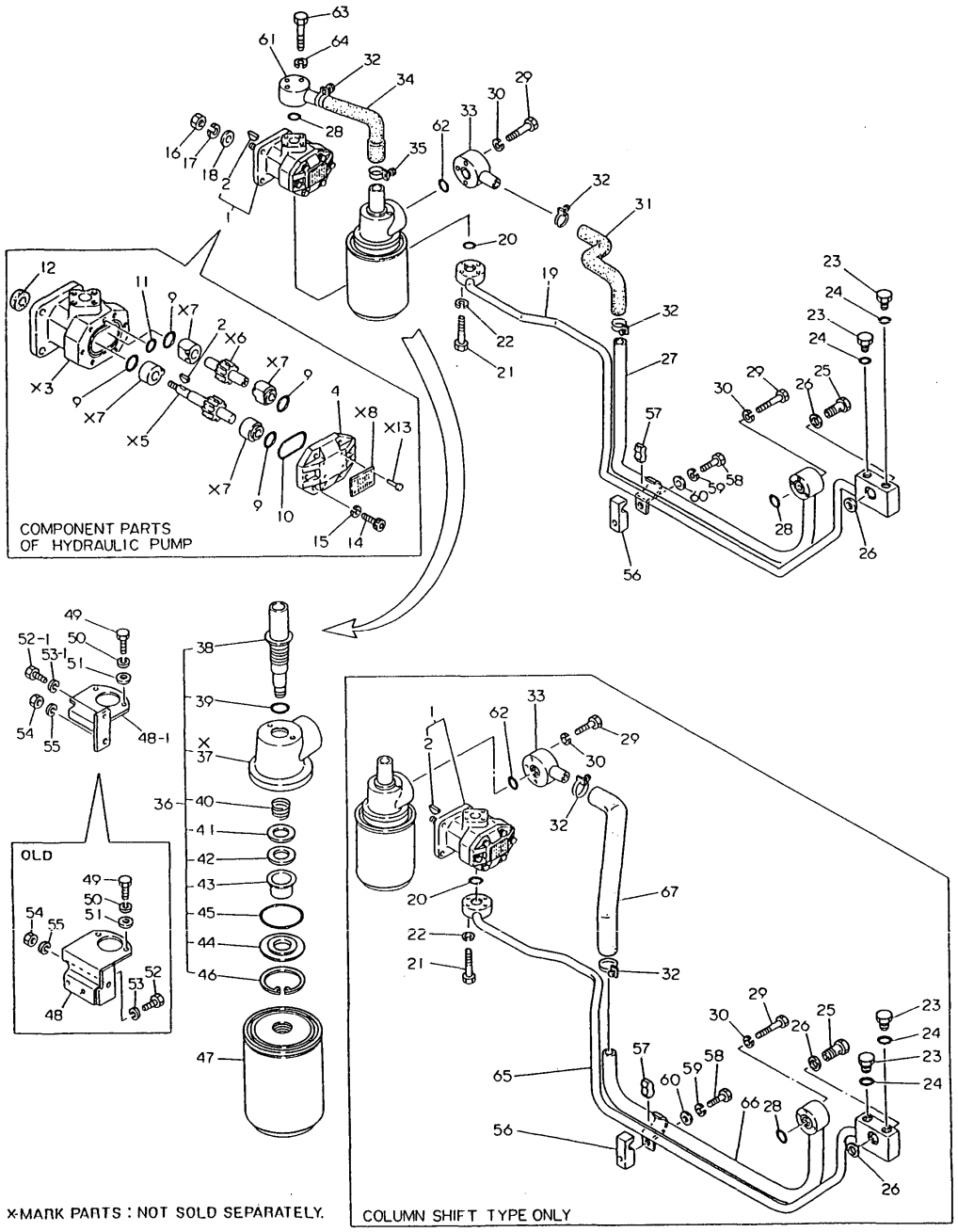

×MARK PARTS : NOT SOLD SEPARATELY.

55. HYDRAULIC PIPES

(A)=YM186 (FLOOR (D)=YM186D(COLUM
(B)=YM186D(FLOOR (E)=
(C)=YM186 (COLUM (F)=

REF.	LEV.	PARTS NO.	DESCRIPTION	Q'TY (A)	(B)	(C)	(D)	(E)	(F)	I	R
	(A=*)	(B=*)	(C=*) (D=*)								
65	1	194500-48110-X	PIPE, HIGH-PRESSURE	1	1	1	1				W
	(A=*1980.12)	(B=*1980.12)	(C=FROM 1ST) (D=FROM 1ST)								
66	1	194500-48240-X	PIPE, LOW PRESSURE	1	1	1	1				W
	(A=*1980.12)	(B=*1980.12)	(C=FROM 1ST) (D=FROM 1ST)								
67	1	194500-48250	RUBBER PIPE	1	1	1	1				W
	(A=*1980.12)	(B=*1980.12)	(C=FROM 1ST) (D=FROM 1ST)								

N:Old $\xleftrightarrow[\text{No}]{\text{Yes}}$ New, Q:Old $\xleftrightarrow[\text{Yes}]{\text{No}}$ New, R:Old $\xleftrightarrow[\text{Yes}]{\text{Yes}}$ New, S:Old $\xleftrightarrow[\text{No}]{\text{No}}$ New, W:Add, Z:Discontinued, F:Interchangeable by set, K:Q'ty Change

(C)Copy Rights YANMAR CO.,LTD.

Fig.56. ELECTRIC PARTS (FLOOR:U.S.A.)

Fig. 56 ELECTRIC PARTS (Floor Shift type:U.S.A.)

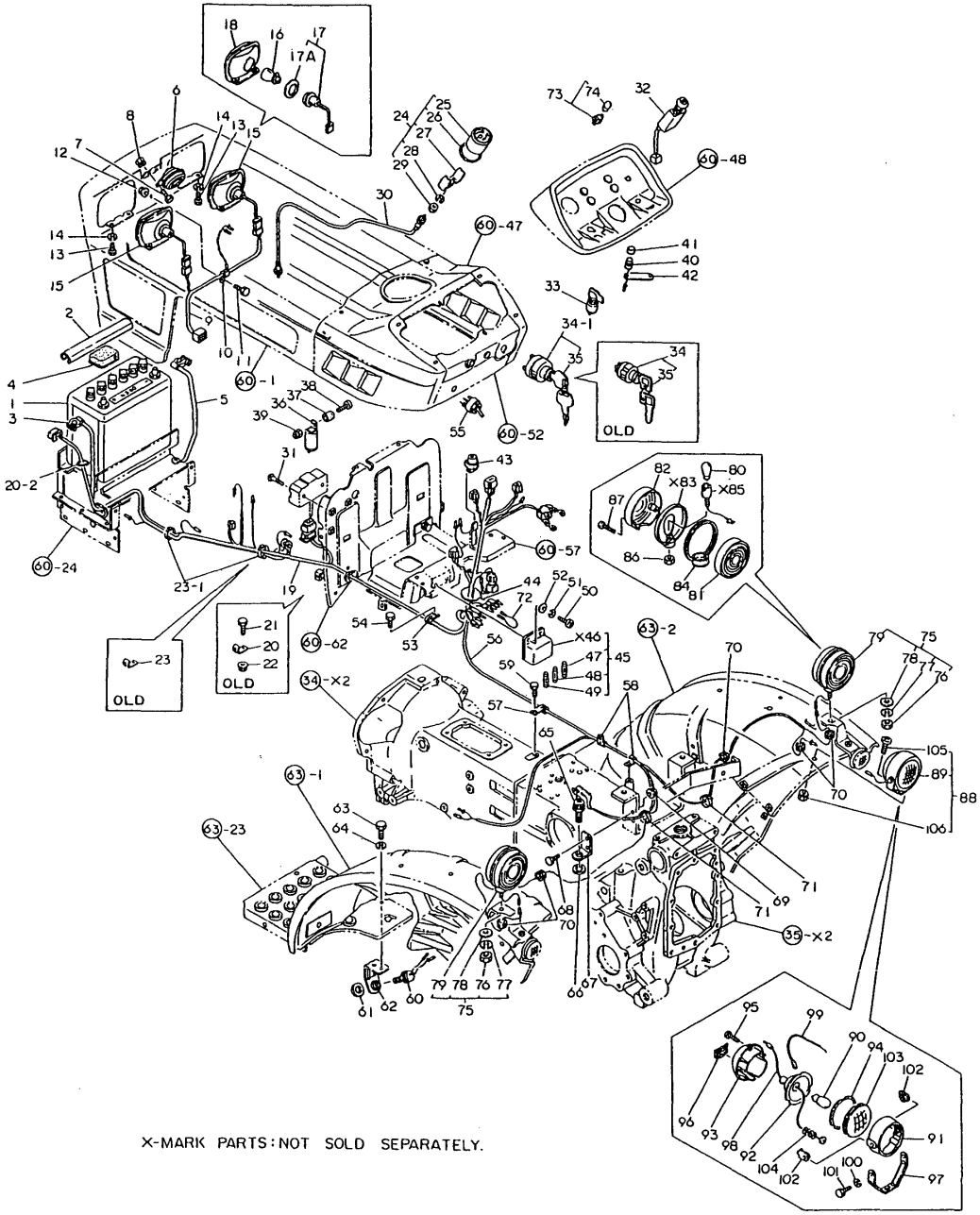

0CT10-G22801

56. ELECTRIC PARTS (FLOOR:U.S.A.)

(A)=YM186 (FLOOR (D)=YM186D(COLUM
(B)=YM186D(FLOOR (E)=
(C)=YM186 (COLUM (F)=

REF.	LEV.	PARTS NO.	DESCRIPTION	Q'TY (A)	(B)	(C)	(D)	(E)	(F)	I	R
1	1	194446-51310	BATTERY DR46B24R	1	1						
2	1	194440-51550	COVER, BATTERY	1	1						
3	1	194446-51410	CABLE, BATTERY	1	1						
4	1	194080-51430	INSULATOR	1	1						
5	1	194440-51420	CABLE, BATTERY EARTH	1	1						
6	1	194151-57100	HORN	1	1						
7	1	26116-060122	BOLT M 6X 12	2	2						
7-1	1	26106-060122	BOLT M 6X 12 PLATED	2	2					N	
	(A=T/# 00898)	(B=T/# 02355)									
8	1	194990-22040	NUT W/WASHER 6	2	2						
9	1	194440-51150	HARNESS (E), WIRE	1	1						
10	1	194440-51630	CLAMP, WIRE HARNESS	1	1						
11	1	26116-060162	BOLT M 6X 16 PLATED	1	1					Z	
	(A=*)	(B=*)									
12	1	194990-22130	NUT W/WASHER 6	1	1					Z	
	(A=*)	(B=*)									
13	1	26116-060122	BOLT M 6X 12	4	4						
13-1	1	26106-060122	BOLT M 6X 12 PLATED	4	4					N	
	(A=T/# 00898)	(B=T/# 02355)									
14	1	22217-060000	SPRING WASHER 6	4	4					Z	
	(A=T/# 00898)	(B=T/# 02355)									
15	1	194201-53050	LIGHT ASSY, HEAD	2	2						
15-1	1	194201-53051	LIGHT ASSY, HEAD	2	2					N	
	(A=*1981.)	(B=*1981.)									
16	2	194262-53080	BULB 12V-25W	2	2						
17	2	194262-53100	SOCKET	2	2					W	
	(A=*)	(B=*)									
17-1	2	194201-53100	SOCKET	2	2					S	
	(A=*1981.)	(B=*1981.)									
17A	3	194201-53110	GASKET	2	2					W	
	(A=*1981.)	(B=*1981.)									
18	2	194262-53090	BEAM UNIT	2	2					W	
	(A=*)	(B=*)									
19	1	194446-51110	HARNESS (A), WIRE	1	1						
20	1	194440-51630	CLAMP, WIRE HARNESS	1	1						
20-1	1	194150-51620	CLAMP, WIRE HARNESS	1	1					S	
	(A=T/# 00200)	(B=T/# 00487)									
20-2	1	121750-59890	RETAINER	1	1					N	
	(A=T/# 00200)	(B=T/# 00487)									
21	1	26116-060122	BOLT M 6X 12	1	1					Z	
	(A=T/# 00200)	(B=T/# 00487)									
22	1	194990-22130	NUT W/WASHER 6	1	1					Z	
	(A=T/# 00200)	(B=T/# 00487)									
23	1	194150-51620	CLAMP, WIRE HARNESS	1	1						
23-1	1	121750-59890	RETAINER	2	2					N	
	(A=*1981.)	(B=*1981.)									
24	1	194446-56100	HOUR-METER ASSY	1	1						
26	2	194110-56150	SHEET	1	1					W	
	(A=*)	(B=*)									
27	2	194110-56170	FITTINGS	1	1					W	
	(A=*)	(B=*)									

N:Old $\xleftarrow[\text{No}]{\text{Yes}}$ New, Q:Old $\xleftarrow[\text{Yes}]{\text{No}}$ New, R:Old $\xleftarrow[\text{Yes}]{\text{Yes}}$ New, S:Old $\xleftarrow[\text{No}]{\text{No}}$ New, W:Add, Z:Discontinued, F:Interchangeable by set, K:Q'ty Change

++ CONTINUE ++

(C)Copy Rights YANMAR CO.,LTD.

Fig.56. ELECTRIC PARTS (FLOOR:U.S.A.)

Fig. 56 ELECTRIC PARTS (Floor Shift type:U.S.A.)

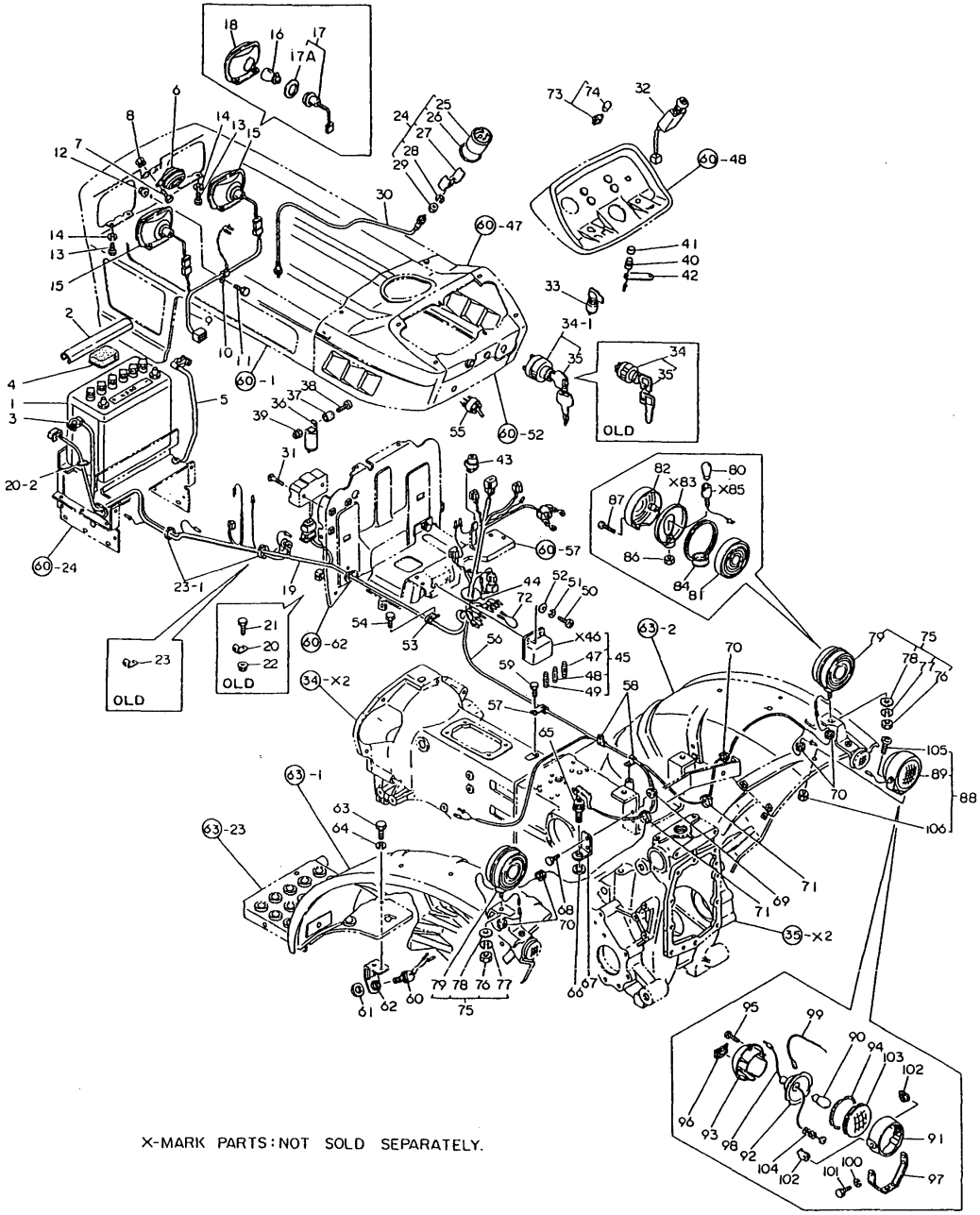

56. ELECTRIC PARTS (FLOOR:U.S.A.)

(A)=YM186 (FLOOR (D)=YM186D(COLUM
(B)=YM186D(FLOOR (E)=
(C)=YM186 (COLUM (F)=

REF.	LEV.	PARTS NO.	DESCRIPTION	Q'TY (A)	(B)	(C)	(D)	(E)	(F)	I	R
28	2	22217-040000	SPRING WASHER 4	2	2					W	
	(A=*)	(B=*)									
29	2	26716-040002	NUT M 4	2	2					W	
	(A=*)	(B=*)									
30	1	194440-56900	CABLE, HOUR-METER	1	1						
31	1	26557-060302	SCREW M 6X 30	2	2						
32	1	194440-52120	SWITCH, LIGHTING	1	1						
33	1	194440-52130	SWITCH, TURN SIGNAL	1	1						
34	1	194155-52110	SWITCH, STARTING	1	1						
34-1	1	194322-52110	SWITCH, STARTING	1	1					N	
	(A=*1983.)	(B=*1983.)									
35	2	194155-52190	KEY	1	1						
36	1	194080-57202	RELAY	1	1						
37	1	194151-57210	SPACER	1	1						
38	1	26557-050162	SCREW M 5X 16	1	1						
39	1	26347-050002	U-NUT M 5	1	1						
39-1	1	26346-050002	U-NUT M 4 PLATED	1	1					N	
	(A=*)	(B=*)									
40	1	194150-52160	SWITCH, HORN	1	1						
41	1	194150-52170	CAP, HORN SWITCH	1	1						
42	1	194440-51180	PLATE, EARTH	1	1						
43	1	194464-57250	RELAY, LAMP CHECK	1	1						
44	1	194150-51620	CLAMP, WIRE HARNESS	2	2						
44-1	1	194250-51660	BAND 250	1	1					N	
	(A=*)	(B=*)									
45	1	194440-52400	BOX ASSY, FUSE	1	1						
47	2	194145-52820	FUSE 5A	1	1						
48	2	194145-52830	FUSE 10A	2	2						
49	2	194145-52840	FUSE 15A	2	2						
50	1	26587-060202	SCREW M 6X 20	2	2						
51	1	22217-060000	SPRING WASHER 6	2	2					Z	
	(A=*)	(B=*)									
52	1	22137-060000	WASHER 6, POLISHED	1	1					Z	
	(A=*)	(B=*)									
53	1	194440-51630	CLAMP, WIRE HARNESS	1	1						
53-1	1	194440-51620	CLAMP, WIRE HARNESS	1	1					S	
	(A=T/# 00511)	(B=T/# 01233)									
54	1	26116-060122	BOLT M 6X 12	1	1					Z	
	(A=T/# 00511)	(B=T/# 01233)									
55	1	194446-83310	SWITCH, FRONT P.T.O.	1	1						
56	1	194446-51120	HARNESS (B), WIRE	1	1						
57	1	194440-51630	CLAMP, WIRE HARNESS	1	1						
58	1	194440-51620	CLAMP, WIRE HARNESS	2	2						
59	1	26116-060122	BOLT M 6X 12	3	3						
59-1	1	26116-060122	BOLT M 6X 12	1	1					K	
	(A=*)	(B=*)									
59-2	1	26106-060122	BOLT M 6X 12 PLATED	1	1					N	
	(A=T/# 00898)	(B=T/# 02355)									
60	1	194440-52190	SWITCH, SAFETY START	1	1						
60-1	1	194440-52191	SWITCH, SAFETY START	1	1					N	
	(A=T/# 00844)	(B=T/# 02103)									

N:Old $\xleftarrow[\text{No}]{\text{Yes}}$ New, Q:Old $\xleftarrow[\text{Yes}]{\text{No}}$ New, R:Old $\xleftarrow[\text{Yes}]{\text{Yes}}$ New, S:Old $\xleftarrow[\text{No}]{\text{No}}$ New, W:Add, Z:Discontinued, F:Interchangeable by set, K:Q'ty Change

++ CONTINUE ++

(C)Copy Rights YANMAR CO.,LTD.

Fig.56. ELECTRIC PARTS (FLOOR:U.S.A.)

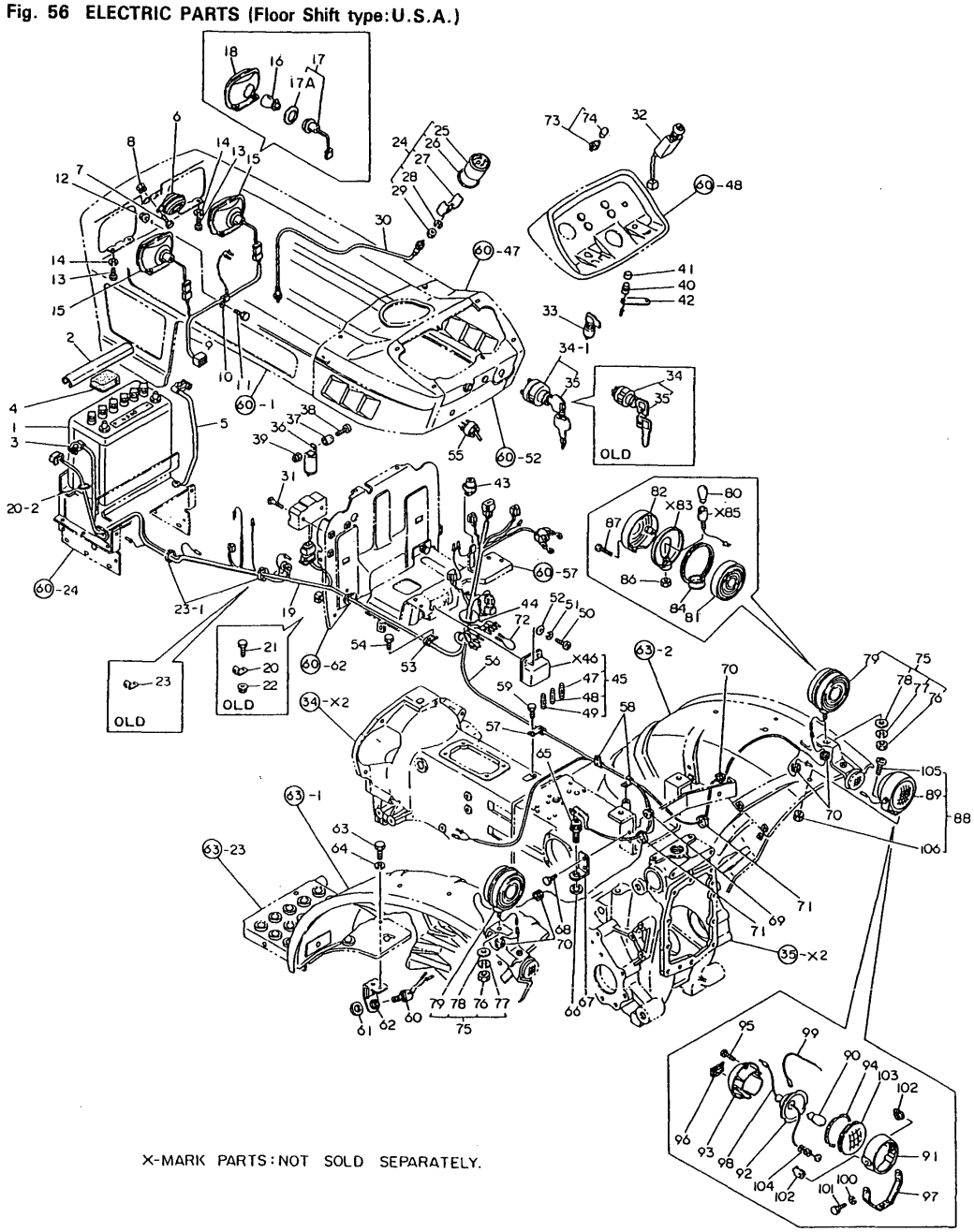

0CT10-G22801

56. ELECTRIC PARTS (FLOOR:U.S.A.)

(A)=YM186 (FLOOR (D)=YM186D(COLUM
(B)=YM186D(FLOOR (E)=
(C)=YM186 (COLUM (F)=

REF.	LEV.	PARTS NO.	DESCRIPTION	Q'TY (A)	(B)	(C)	(D)	(E)	(F)	I	R
61	1	194240-52210	NUT M22	1	1						
62	1	194446-52220-X	STAY, SAFETY SWITCH	1	1						
63	1	26116-060122	BOLT M 6X 12	2	2						
63-1	1	26106-060122	BOLT M 6X 12 PLATED	2	2					N	
	(A=T/# 00898)	(B=T/# 02355)									
64	1	22217-060000	SPRING WASHER 6	2	2						
65	1	194440-52190	SWITCH, SAFETY START	1	1						
65-1	1	194440-52191	SWITCH, SAFETY START	1	1					N	
	(A=T/# 00844)	(B=T/# 02103)									
66	1	194240-52210	NUT M22	1	1						
67	1	194446-52230-X	STAY, SAFETY SWITCH	1	1						
68-1	1	26116-060162	BOLT M 6X 16 PLATED	2	2						
68-2	1	26106-060162	BOLT M 6X 16 PLATED	2	2					N	
	(A=T/# 00844)	(B=T/# 02103)									
69	1	194990-22130	NUT W/WASHER 6	2	2					W	
	(A=*)	(B=*)									
70	1	194080-58810	GROMMET 8	5	5						
71	1	194150-51620	CLAMP, WIRE HARNESS	2	2						
71-1	1	121750-59890	RETAINER	2	2					N	
	(A=*1981.)	(B=*1981.)									
72	1	194446-51160	WIRE, LEAD	1	1					W	
	(A=T/# 00200)	(B=T/# 00487)									
73	1	194440-55100	LAMP ASSY, INDICATOR	3	3					W	
	(A=*)	(B=*)									
74	2	194440-55820	BULB 12V-3.4W	3	3					W	
	(A=*1981.)	(B=*1981.)									
75	1	794275-53401	LAMP ASSY, WORKING	2	2						
76	2	26716-100002	NUT M10	2	2						
77	2	22217-100000	SPRING WASHER 10	2	2						
78	2	22137-100000	WASHER 10,POLISHED	2	2						
79	2	194275-53401	LAMP ASSY, WORKING	2	2						
80	3	194275-53410	BULB	2	2						
81	3	194275-53421	LENS	2	2						
82	3	194275-53431	LENS	2	2						
84	3	194275-53451	GASKET	2	2						
86	3	26756-100002	LOCK NUT M10 PLATED	2	2						
87	3	194275-53481	SCREW	6	6						
88	1	794275-54100	LAMP ASSY, WORKING	1	1						
89	2	194275-54100	LAMP, WORKING	1	1						
90	3	194081-55820	BULB 12V-20W	1	1						
91	3	194275-54120	HOUSING	1	1						
92	3	194275-54130	REFLECTOR	1	1						
93	3	194275-54140	HOUSING	1	1						
94	3	194275-54150	GASKET	1	1						
95	3	26557-040162	SCREW M 4X 16	3	3						
96	3	194275-54160	PLUG	1	1						
97	3	194275-54170	BRACKET	1	1						
98	3	194275-54180	LEAD	1	1						
99	3	194275-54190	LEAD	1	1						
100	3	22217-060000	SPRING WASHER 6	2	2						
101	3	26116-060142	BOLT M6X14	2	2						

N:Old $\overset{\text{Yes}}{\underset{\text{No}}{\leftrightarrow}}$ New, Q:Old $\overset{\text{No}}{\underset{\text{Yes}}{\leftrightarrow}}$ New, R:Old $\overset{\text{Yes}}{\underset{\text{Yes}}{\leftrightarrow}}$ New, S:Old $\overset{\text{No}}{\underset{\text{No}}{\leftrightarrow}}$ New, W:Add, Z:Discontinued, F:Interchangeable by set, K:Q'ty Change

++ CONTINUE ++

(C)Copy Rights YANMAR CO.,LTD.

Fig.56. ELECTRIC PARTS (FLOOR:U.S.A.)

Fig. 56 ELECTRIC PARTS (Floor Shift type:U.S.A.)

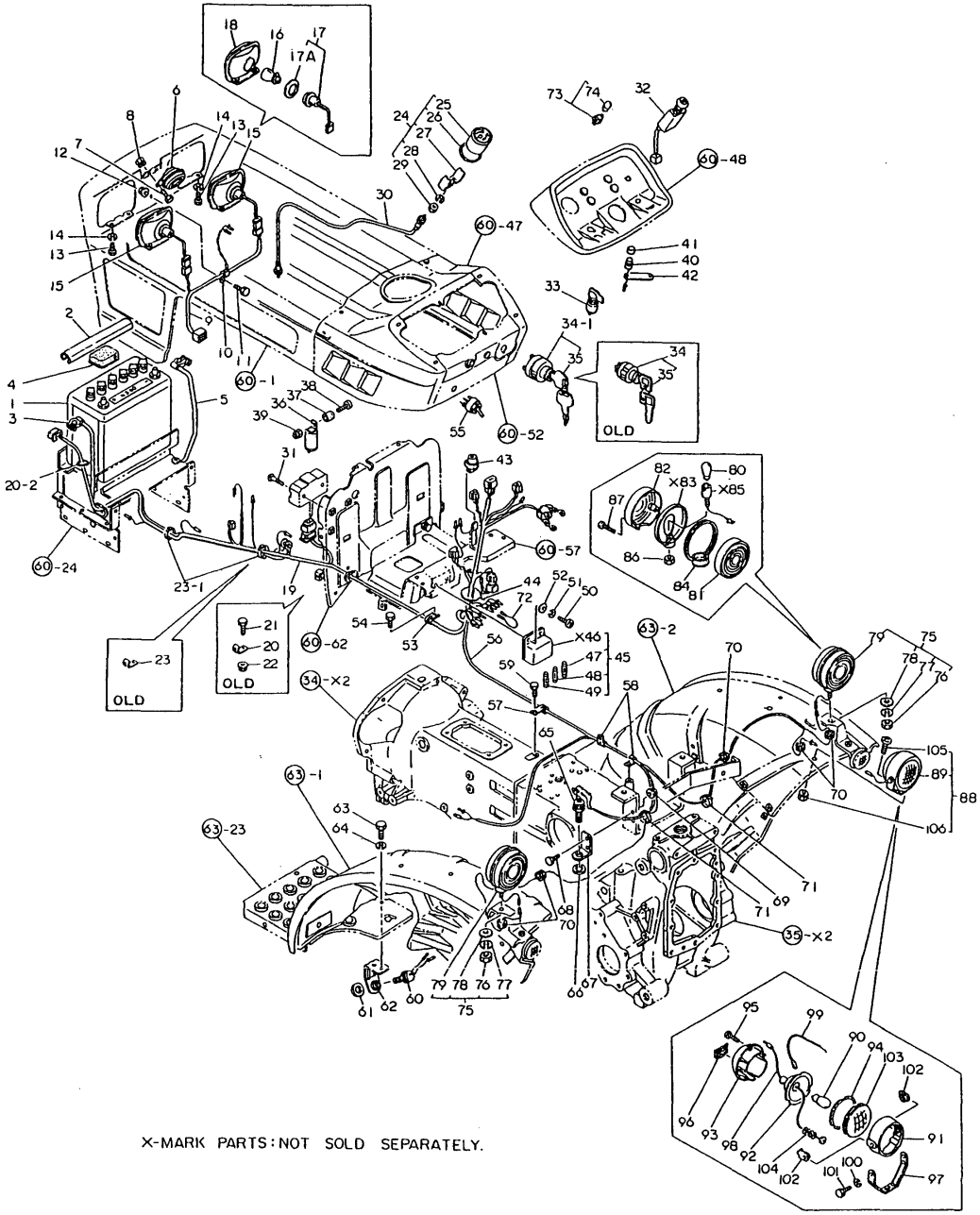

0CT10-G22801

56. ELECTRIC PARTS (FLOOR:U.S.A.)

(A)=YM186 (FLOOR
(B)=YM186D(FLOOR
(C)=YM186 (COLUM
(D)=YM186D(COLUM
(E)=
(F)=

REF.	LEV.	PARTS NO.	DESCRIPTION	Q'TY (A)	(B)	(C)	(D)	(E)	(F)	I	R
102	3	194275-54210	NUT	2	2						
103	3	194275-54110	LENS	1	1						
104	3	194275-54220	SPRING	1	1						
105	2	26587-080162	SCREW M 8X 16	1	1						
106	2	194990-22050	NUT W/WASHER 8	1	1						

N:Old ←Yes/No→ New, Q:Old ←No/Yes→ New, R:Old ←Yes/Yes→ New, S:Old ←No/No→ New, W:Add, Z:Discontinued, F:Interchangeable by set, K:Q'ty Change

(C)Copy Rights YANMAR CO.,LTD.

Fig.57. ELECTRIC PARTS (COLUMN:U.S.A.)

Fig. 57 ELECTRIC PARTS (Column Shift type:U.S.A.)

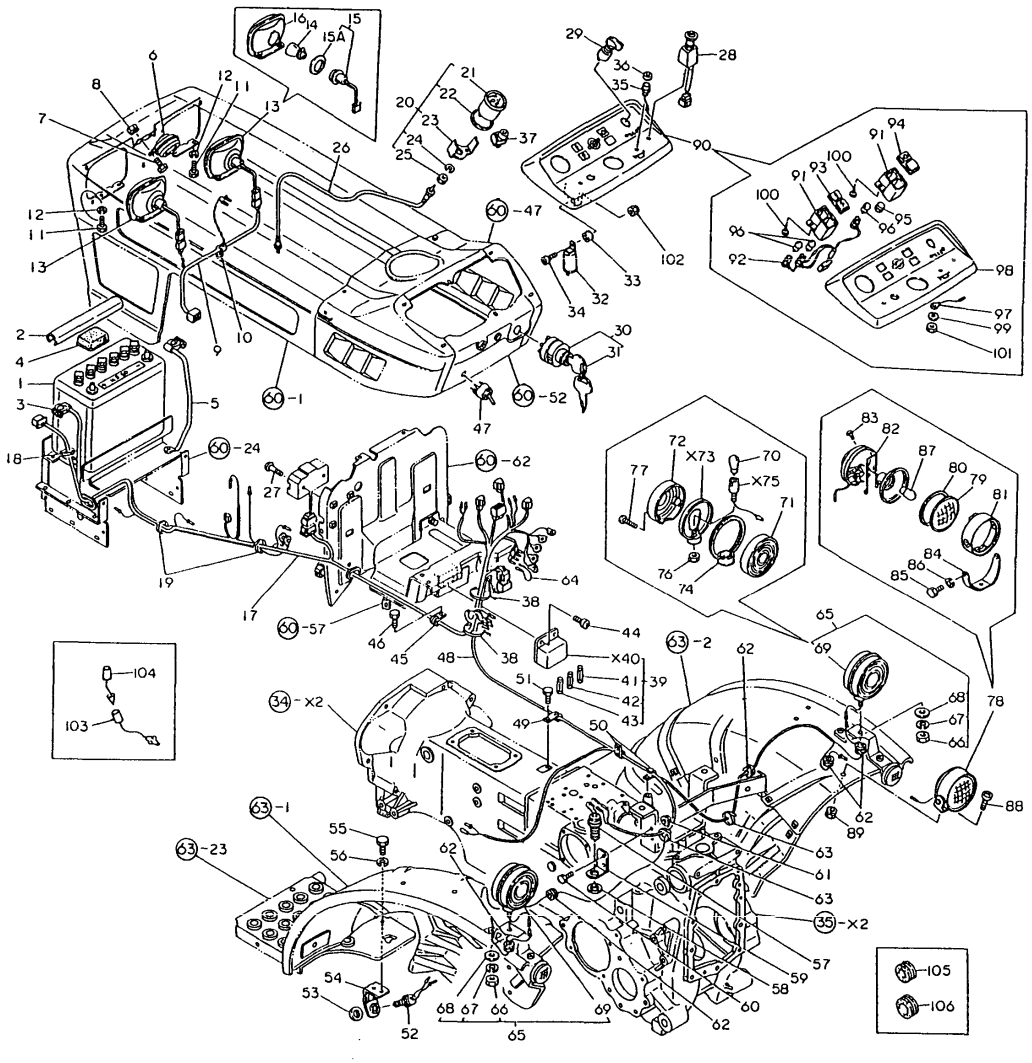

57. ELECTRIC PARTS (COLUMN:U.S.A.)

(A)=YM186 (FLOOR (D)=YM186D(COLUM
(B)=YM186D(FLOOR (E)=
(C)=YM186 (COLUM (F)=

REF.	LEV.	PARTS NO.	DESCRIPTION	Q'TY (A)	(B)	(C)	(D)	(E)	(F)	I	R
1	1	194446-51310	BATTERY DR46B24R			1	1				
2	1	194440-51550	COVER, BATTERY			1	1				
3	1	194446-51410	CABLE, BATTERY			1	1				
4	1	194080-51430	INSULATOR			1	1				Z
			(C=*) (D=*)								
5	1	194440-51420	CABLE, BATTERY EARTH			1	1				
6	1	194151-57100	HORN			1	1				
7	1	26116-060122	BOLT M 6X 12			2	2				
7-1	1	26106-060122	BOLT M 6X 12 PLATED			2	2				N
			(C=T/# 20991) (D=T/# 42957)								
8	1	194990-22040	NUT W/WASHER 6			2	2				
9	1	194440-51150	HARNESS (E), WIRE			1	1				
10	1	194440-51630	CLAMP, WIRE HARNESS			1	1				
11	1	26116-060122	BOLT M 6X 12			4	4				
11-1	1	26014-060122	BOLT M 6X 12			4	4				N
			(C=T/# 20858) (D=T/# 41924)								
11-2	1	26106-060122	BOLT M 6X 12 PLATED			4	4				N
			(C=T/# 20991) (D=T/# 42957)								
12	1	22217-060000	SPRING WASHER 6			4	4				Z
			(C=T/# 20858) (D=T/# 41924)								
13	1	194201-53050	LIGHT ASSY, HEAD			2	2				
13-1	1	194201-53051	LIGHT ASSY, HEAD			2	2				N
			(C=*1981.) (D=*1981.)								
14	2	194262-53080	BULB 12V-25W			2	2				
15	2	194262-53100	SOCKET			2	2				
15-1	2	194201-53100	SOCKET			2	2				S
			(C=*1981.) (D=*1981.)								
15A	3	194201-53110	GASKET			2	2				W
			(C=*) (D=*)								
16	2	194262-53090	BEAM UNIT			2	2				
17	1	194500-51110	HARNESS (A), WIRE			1	1				
17-1	1	194448-51161	HARNESS (A), WIRE			1	1				N
			(C=T/# 20858) (D=T/# 41924)								
17-2	1	194448-51162	HARNESS (A), WIRE			1	1				S
			(C=T/# 20952) (D=T/# 42656)								
18	1	194150-51620	CLAMP, WIRE HARNESS			1	1				
18-1	1	121750-59890	RETAINER			1	1				N
			(C=T/# 20101) (D=T/# 40101)								
19	1	194150-51620	CLAMP, WIRE HARNESS			1	1				
19-1	1	121750-59890	RETAINER			2	2				N
			(C=T/# 20101) (D=T/# 40101)								
20	1	194432-56100	HOUR-METER ASSY			1	1				
22	2	194432-56150	SHEET			1	1				
23	2	194432-56170	FITTING			1	1				
24	2	22217-040000	SPRING WASHER 4			2	2				
25	2	26716-040002	NUT M 4			2	2				
26	1	194440-56900	CABLE, HOUR-METER			1	1				
27	1	26557-060302	SCREW M 6X 30			2	2				
28	1	194440-52120	SWITCH, LIGHTING			1	1				
28-1	1	194420-52120	SWITCH, LIGHTING			1	1				N
			(C=T/# 20967) (D=T/# 42775)								

N:Old $\frac{\text{Yes}}{\text{No}}$ New, Q:Old $\frac{\text{No}}{\text{Yes}}$ New, R:Old $\frac{\text{Yes}}{\text{Yes}}$ New, S:Old $\frac{\text{No}}{\text{No}}$ New, W:Add, Z:Discontinued, F:Interchangeable by set, K:Q'ty Change

++ CONTINUE ++

(C)Copy Rights YANMAR CO.,LTD.

Fig.57. ELECTRIC PARTS (COLUMN:U.S.A.)

Fig. 57 ELECTRIC PARTS (Column Shift type:U.S.A.)

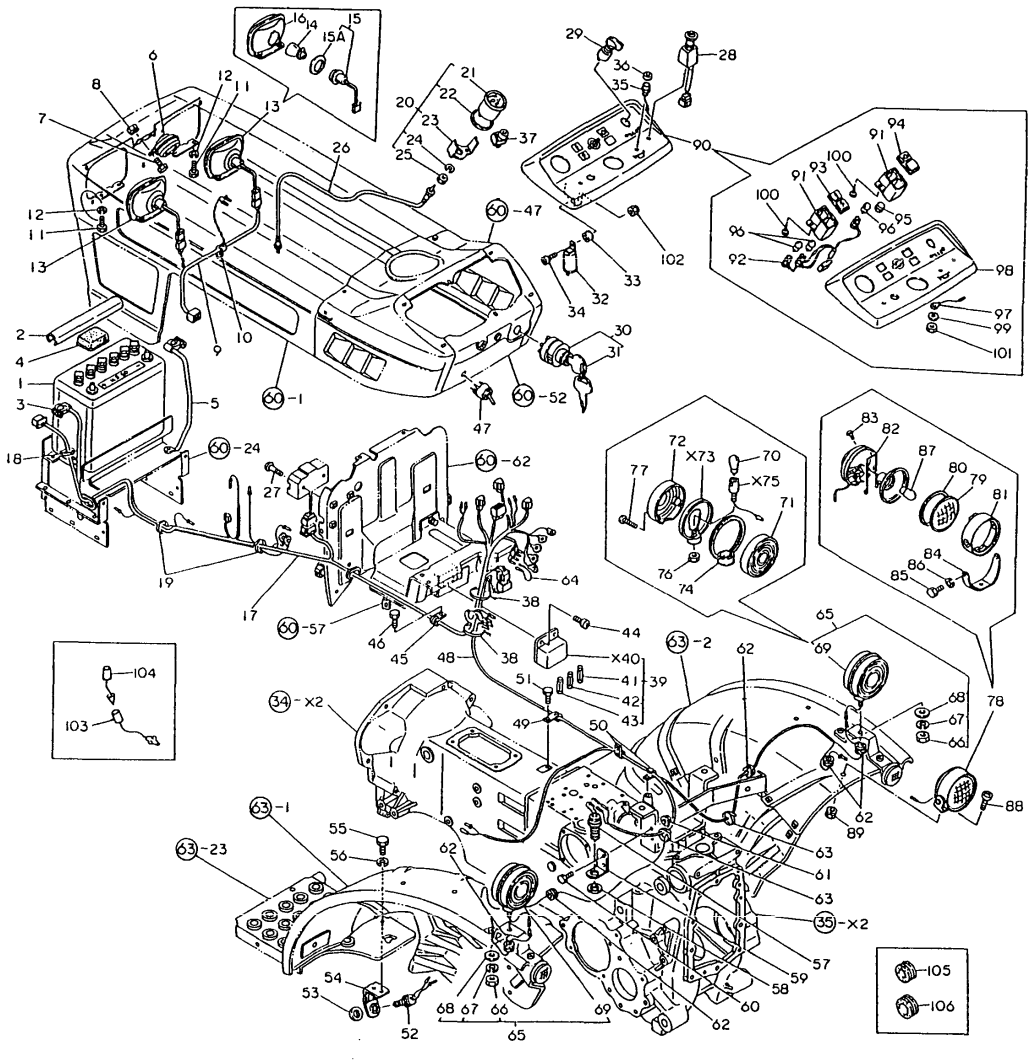

57. ELECTRIC PARTS (COLUMN:U.S.A.)

(A)=YM186 (FLOOR (D)=YM186D(COLUM
(B)=YM186D(FLOOR (E)=
(C)=YM186 (COLUM (F)=

REF.	LEV.	PARTS NO.	DESCRIPTION	Q'TY (A)	(B)	(C)	(D)	(E)	(F)	I	R
29	1	194440-52130	SWITCH, TURN SIGNAL			1	1				
29-1	1	194080-52130	SWITCH, TURN SIGNAL			1	1				N
			(C=*) (D=*)								
29-2	1	194080-52131	SWITCH, TURN SIGNAL			1	1				N
			(C=*) (D=*)								
29-3	1	194080-52132	SWITCH, TURN SIGNAL			1	1				N
			(C=*) (D=*)								
29-4	1	194170-52130	SWITCH, TURN SIGNAL			1	1				S
			(C=*1982.) (D=*1982.)								
30	1	194322-52110	SWITCH, STARTING			1	1				
31	2	194155-52190	KEY			1	1				
31-1	2	194155-52160	KEY			1	1				N
			(C=T/# 20972) (D=T/# 42882)								
32	1	194080-57202	RELAY			1	1				
33	1	194151-57210	SPACER			1	1				
34	1	26557-050162	SCREW M 5X 16			1	1				
35	1	194150-52160	SWITCH, HORN			1	1				
36	1	194150-52170	CAP, HORN SWITCH			1	1				
37	1	194464-57250	RELAY, LAMP CHECK			1	1				
38	1	194150-51620	CLAMP, WIRE HARNESS			2	2				
38-1	1	194250-51660	BAND 250			2	2				N
			(C=*) (D=*)								
39	1	194440-52400	BOX ASSY, FUSE			1	1				
40A	2	194440-52420	COVER, FUSE BOX			1	1				
41	2	194145-52820	FUSE 5A			1	1				
41-1	2	29411-050000	FUSE (5A),CARTRIDGE			1	1				R
			(C=T/# 20972) (D=T/# 42883)								
42	2	194145-52830	FUSE 10A			2	2				
42-1	2	29411-100000	FUSE (10A),CARTRIDGE			2	2				R
			(C=T/# 20972) (D=T/# 42883)								
43	2	194145-52840	FUSE 15A			2	2				
43-1	2	29411-150000	FUSE (15A),CARTRIDGE			2	2				R
			(C=T/# 20972) (D=T/# 42883)								
44	1	26587-060202	SCREW M 6X 20			2	2				
45	1	194440-51630	CLAMP, WIRE HARNESS			1	1				
45-1	1	194440-51620	CLAMP, WIRE HARNESS			1	1				S
			(C=T/# 20122) (D=T/# 40280)								
46	1	26116-060122	BOLT M 6X 12			1	1				Z
			(C=T/# 20122) (D=T/# 40280)								
47	1	194446-83310	SWITCH, FRONT P.T.O.			1	1				
48	1	194500-51120	HARNESS (B), WIRE			1	1				
49	1	194440-51630	CLAMP, WIRE HARNESS			1	1				
50	1	194440-51620	CLAMP, WIRE HARNESS			2	2				
51	1	26116-060122	BOLT M 6X 12			1	1				
51-1	1	26106-060122	BOLT M 6X 12 PLATED			1	1				N
			(C=T/# 20991) (D=T/# 42957)								
52	1	194440-52190	SWITCH, SAFETY START			1	1				
52-1	1	194440-52191	SWITCH, SAFETY START			1	1				N
			(C=T/# 20958) (D=T/# 42791)								
53	1	194240-52210	NUT M22			1	1				
54	1	194446-52220-X	STAY, SAFETY SWITCH			1	1				

N:Old $\overset{\text{Yes}}{\underset{\text{No}}{\leftrightarrows}}$ New, Q:Old $\overset{\text{No}}{\underset{\text{Yes}}{\leftrightarrows}}$ New, R:Old $\overset{\text{Yes}}{\underset{\text{Yes}}{\leftrightarrows}}$ New, S:Old $\overset{\text{No}}{\underset{\text{No}}{\leftrightarrows}}$ New, W:Add, Z:Discontinued, F:Interchangeable by set, K:Q'ty Change

++ CONTINUE ++

(C)Copy Rights YANMAR CO.,LTD.

Fig.57. ELECTRIC PARTS (COLUMN:U.S.A.)

Fig. 57 ELECTRIC PARTS (Column Shift type:U.S.A.)

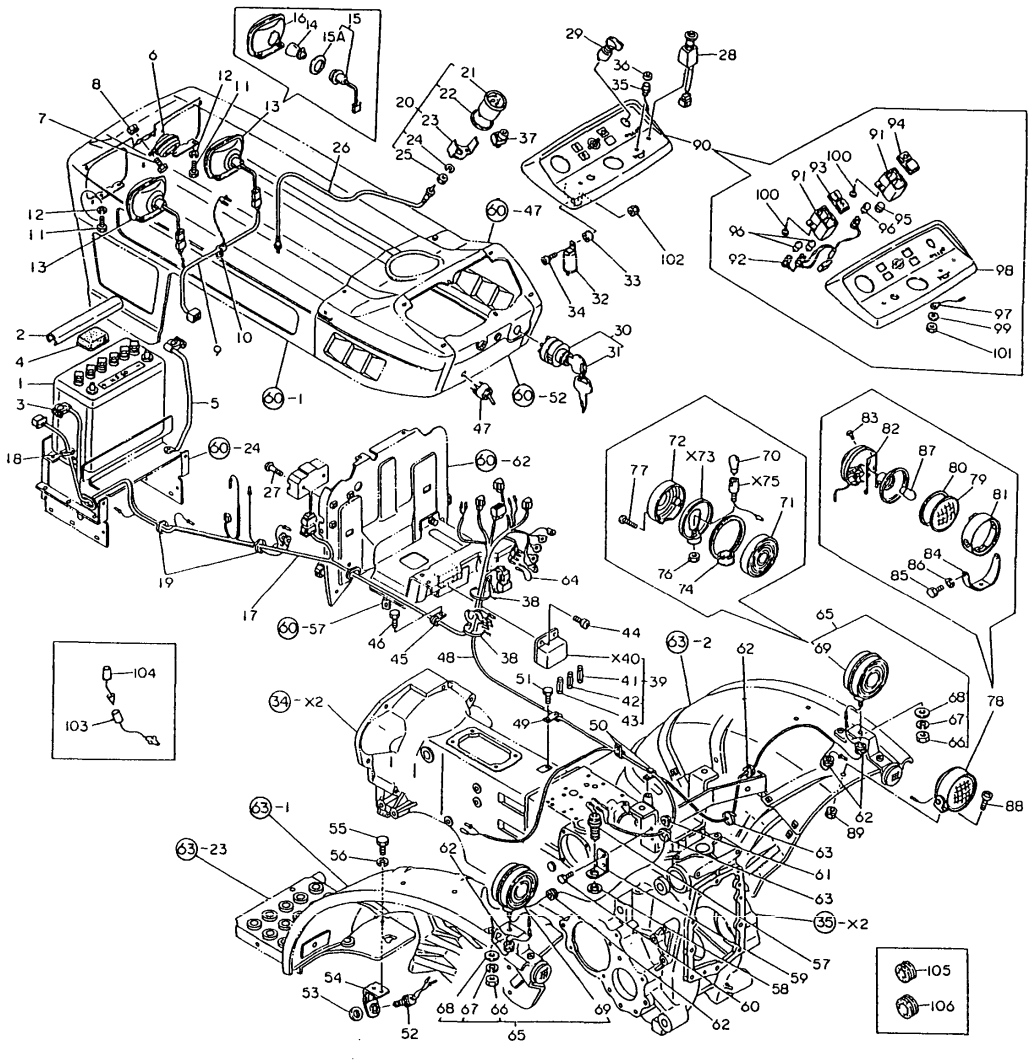

57. ELECTRIC PARTS (COLUMN:U.S.A.)

(A)=YM186 (FLOOR (D)=YM186D(COLUM
(B)=YM186D(FLOOR (E)=
(C)=YM186 (COLUM (F)=

REF.	LEV.	PARTS NO.	DESCRIPTION	Q'TY (A)	(B)	(C)	(D)	(E)	(F)	I	R
55	1	26116-060122	BOLT M 6X 12			2	2				
55-1	1	26014-060122	BOLT M 6X 12			2	2			N	
			(C=T/# 20858) (D=T/# 41924)								
55-2	1	26106-060122	BOLT M 6X 12 PLATED			2	2			N	
			(C=T/# 20991) (D=T/# 42957)								
56	1	22217-060000	SPRING WASHER 6			2	2			Z	
			(C=T/# 20858) (D=T/# 41924)								
57	1	194440-52190	SWITCH, SAFETY START			1	1				
57-1	1	194440-52191	SWITCH, SAFETY START			1	1			N	
			(C=T/# 20958) (D=T/# 42834)								
58	1	194240-52210	NUT M22			1	1				
59	1	194446-52230-X	STAY, SAFETY SWITCH			1	1				
60	1	26116-060162	BOLT M 6X 16 PLATED			2	2				
60-1	1	26106-060162	BOLT M 6X 16 PLATED			2	2			N	
			(C=T/# 20991) (D=T/# 42957)								
61	1	194990-22130	NUT W/WASHER 6			2	2				
62	1	194080-58810	GROMMET 8			5	5				
62-1	1	194080-58810	GROMMET 8			1	1			K	
			(C=*1982.12) (D=*1982.12)								
63	1	194150-51620	CLAMP, WIRE HARNESS			2	2				
63-1	1	121750-59890	RETAINER			2	2			N	
			(C=*1981.) (D=*1981.)								
64	1	194446-51160	WIRE, LEAD			1	1				
65	1	794275-53401	LAMP ASSY, WORKING			2	2				
66	2	26716-100002	NUT M10			2	2				
67	2	22217-100000	SPRING WASHER 10			2	2				
68	2	22137-100000	WASHER 10,POLISHED			2	2				
69	2	194275-53401	LAMP ASSY, WORKING			2	2				
70	3	194275-53410	BULB			2	2				
71	3	194275-53421	LENS			2	2				
72	3	194275-53431	LENS			2	2				
74	3	194275-53451	GASKET			2	2				
76	3	26756-100002	LOCK NUT M10 PLATED			2	2				
77	3	194275-53481	SCREW			6	6				
78	1	794081-54101	LAMP ASSY, WORKING			1	1				
79	2	194081-54110	LENS			1	1				
80	2	194081-54120	GASKET			1	1				
81	2	194081-54131	RIM			1	1				
82	2	194081-54151	SPRING			3	3				
83	2	194081-54210	SCREW			1	1				
84	2	194081-54221	STAY			1	1				
85	2	194081-54230	BOLT M6X 12			2	2				
85-1	2	26106-060122	BOLT M 6X 12 PLATED			2	2			N	
			(C=T/# 20991) (D=T/# 42957)								
86	2	194081-54240	SPRING WASHER 6			2	2				
87	2	194081-55820	BULB 12V-20W			1	1				
88	1	26587-080162	SCREW M 8X 16			1	1				
89	1	194990-22050	NUT W/WASHER 8			1	1				
90	1	194432-61600	DASHBOARD ASSY			1	1				
91	2	194170-55120	BOX, PILOT			2	2				
92	2	194170-55130	CORD			1	1				

N:Old $\overset{\text{Yes}}{\underset{\text{No}}{\leftrightarrow}}$ New, Q:Old $\overset{\text{No}}{\underset{\text{Yes}}{\leftrightarrow}}$ New, R:Old $\overset{\text{Yes}}{\underset{\text{Yes}}{\leftrightarrow}}$ New, S:Old $\overset{\text{No}}{\underset{\text{No}}{\leftrightarrow}}$ New, W:Add, Z:Discontinued, F:Interchangeable by set, K:Q'ty Change

++ CONTINUE ++

(C)Copy Rights YANMAR CO.,LTD.

Fig.57. ELECTRIC PARTS (COLUMN:U.S.A.)

Fig. 57 ELECTRIC PARTS (Column Shift type:U.S.A.)

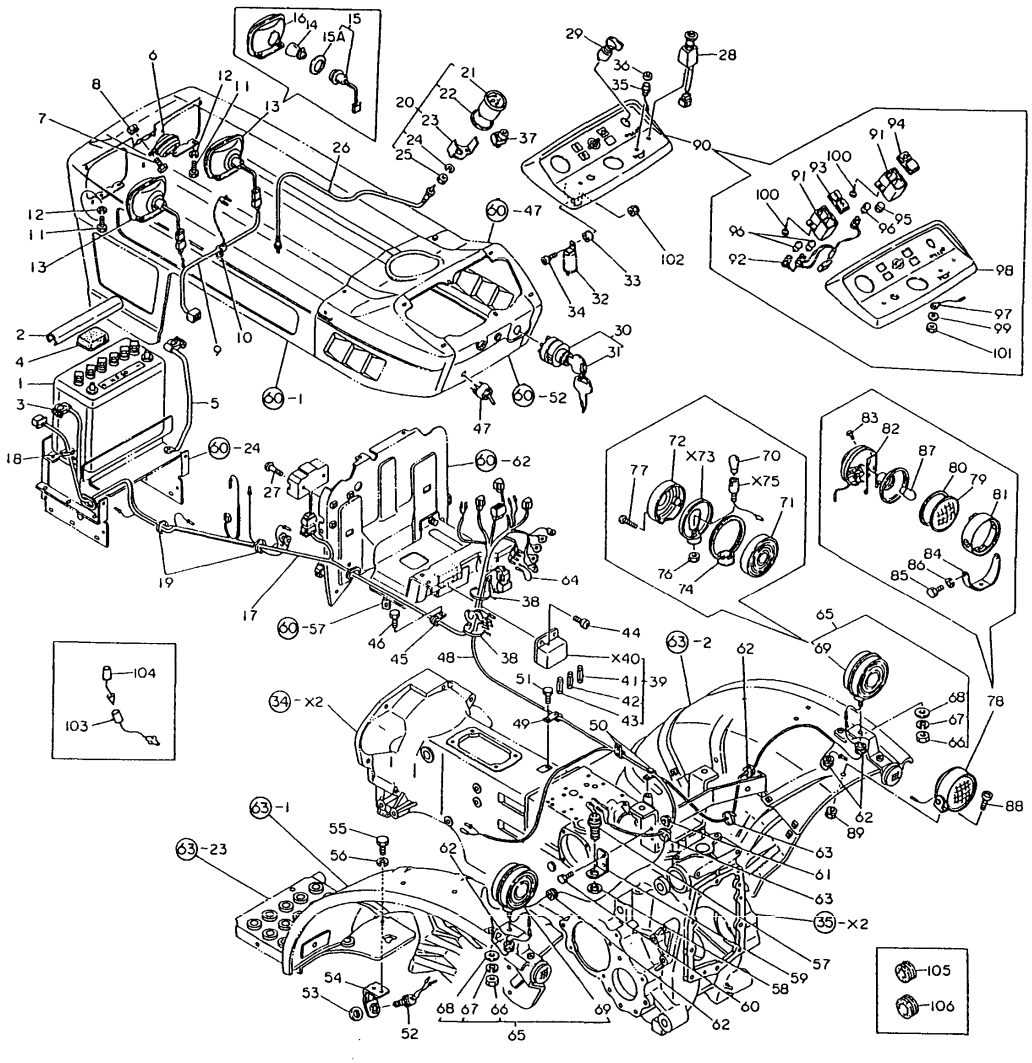

57. ELECTRIC PARTS (COLUMN:U.S.A.)

(A)=YM186 (FLOOR
(B)=YM186D(FLOOR
(C)=YM186 (COLUM
(D)=YM186D(COLUM
(E)=
(F)=

REF.	LEV.	PARTS NO.	DESCRIPTION	Q'TY (A)	(B)	(C)	(D)	(E)	(F)	I	R
93	2	194170-55150	LENS (A)			1	1				
94	2	194170-55160	LENS (B)			1	1				
95	2	194170-55170	COVER			1	1				
96	2	194155-55820	BULB 12V-1.7W			3	3				
97	2	194432-56130	CORD			1	1				
98	2	194432-61610	PANEL, DASHBOARD			1	1				
99	2	22217-080000	SPRING WASHER 8			2	2				
100	2	22857-400120	SCREW 4X12			4	4				
101	2	26716-080002	NUT M 8			1	1				
102	1	26346-050002	U-NUT M 4 PLATED			1	1				
103	1	194312-51210	WIRE, MAIN LEAD (C=T/# 20952) (D=T/# 42656)			1	1			W	
104	1	194550-51220	LINK,FUSIBLE 0.85RED (C=T/# 20952) (D=T/# 42656)			1	1			W	
105	1	194080-58820	GROMMET 15 (C=T/# 20923) (D=T/# 42474)			2	2			W	
106	1	194162-58830	GROMMET 20 (C=T/# 20923) (D=T/# 42474)			2	2			W	

N:Old $\xleftarrow[\text{No}]{\text{Yes}}$ New, Q:Old $\xleftarrow[\text{Yes}]{\text{No}}$ New, R:Old $\xleftarrow[\text{Yes}]{\text{Yes}}$ New, S:Old $\xleftarrow[\text{No}]{\text{No}}$ New, W:Add, Z:Discontinued, F:Interchangeable by set, K:Q'ty Change

(C)Copy Rights YANMAR CO.,LTD.

Fig.58. ELECTRIC PARTS (FLOOR:FRANCE)

Fig. 58 ELECTRIC PARTS (Floor Shift type:FRANCE)

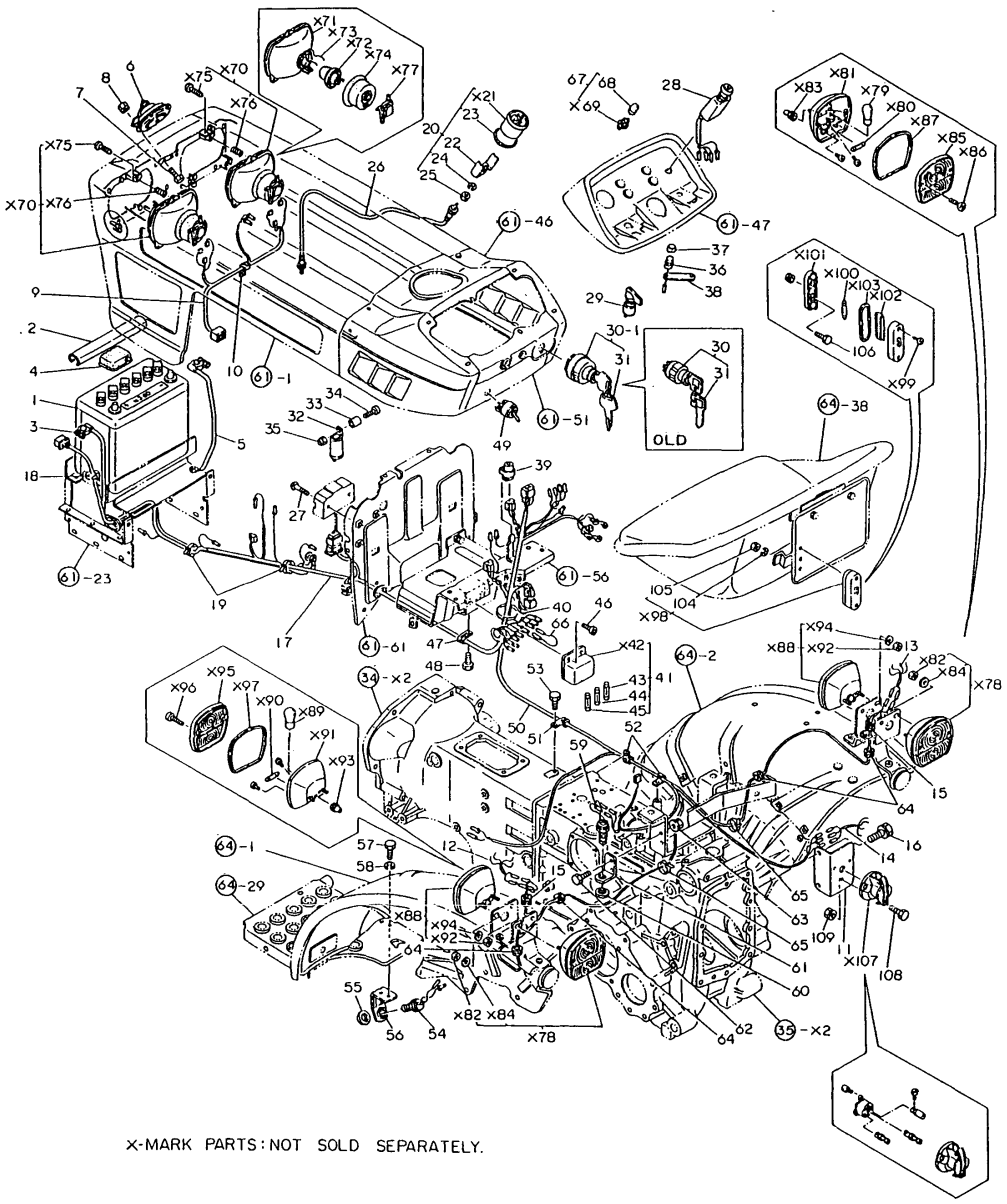

X-MARK PARTS : NOT SOLD SEPARATELY.

0CT10-G22801

58. ELECTRIC PARTS (FLOOR:FRANCE)

(A)=YM186 (FLOOR (D)=YM186D(COLUM
(B)=YM186D(FLOOR (E)=
(C)=YM186 (COLUM (F)=

REF.	LEV.	PARTS NO.	DESCRIPTION	Q'TY (A)	(B)	(C)	(D)	(E)	(F)	I	R
1	1	194446-51310	BATTERY DR46B24R	1	1						
2	1	194440-51550	COVER, BATTERY	1	1						
3	1	194446-51410	CABLE, BATTERY	1	1						
4	1	194080-51430	INSULATOR	1	1						
5	1	194440-51420	CABLE, BATTERY EARTH	1	1						
6	1	194340-57100	HORN ASSY	1	1						
7	1	26116-060122	BOLT M 6X 12	2	2						
7-1	1	26106-060122	BOLT M 6X 12 PLATED	2	2					N	
	(A=T/# 00898)	(B=T/# 02355)									
8	1	194990-22040	NUT W/WASHER 6	2	2						
9	1	194448-51150	HARNESS (E), WIRE	1	1						
10	1	194440-51630	CLAMP, WIRE HARNESS	1	1						
11	1	194448-51700-X	BRACKET, SOCKET	1	1						
12	1	194240-51800	HARNESS (L), WIRE	1	1						
13	1	194240-51810	HARNESS (R), WIRE	1	1						
14	1	194240-51820	HARNESS, SOCKET	1	1						
15	1	194448-58810	GROMMET 8	2	2						
16	1	26013-120222	BOLT M12X 22	2	2						
17	1	194448-51110	HARNESS (A), WIRE	1	1						
18	1	194150-51620	CLAMP, WIRE HARNESS	1	1						
18-1	1	121750-59890	RETAINER	1	1					N	
	(A=T/# 00200)	(B=T/# 00487)									
19	1	194150-51620	CLAMP, WIRE HARNESS	1	1						
19-1	1	121750-59890	RETAINER	2	2					N	
	(A=T/# 00200)	(B=T/# 00487)									
20	1	194446-56100	HOUR-METER ASSY	1	1						
22	2	194110-56170	FITTINGS	1	1						
23	2	194110-56150	SHEET	1	1						
24	2	22217-040000	SPRING WASHER 4	2	2						
25	2	26716-040002	NUT M 4	2	2						
26	1	194440-56900	CABLE, HOUR-METER	1	1						
27	1	26557-060302	SCREW M 6X 30	2	2						
28	1	194240-52120	SWITCH, LIGHTING	1	1						
29	1	194440-52130	SWITCH, TURN SIGNAL	1	1						
30	1	194155-52110	SWITCH, STARTING	1	1						
30-1	1	194322-52110	SWITCH, STARTING	1	1					N	
	(A=T/# 00713)	(B=T/# 01594)									
31	2	194155-52190	KEY	1	1						
32	1	194080-57202	RELAY	1	1						
33	1	194151-57210	SPACER	1	1						
34	1	26557-050162	SCREW M 5X 16	1	1						
35	1	26346-050002	U-NUT M 4 PLATED	1	1						
36	1	194150-52160	SWITCH, HORN	1	1						
37	1	194150-52170	CAP, HORN SWITCH	1	1						
38	1	194440-51180	PLATE, EARTH	1	1						
39	1	194464-57250	RELAY, LAMP CHECK	1	1						
40	1	194150-51620	CLAMP, WIRE HARNESS	2	2						
40-1	1	194250-51660	BAND 250	1	1					N	
	(A=*)	(B=*)									
41	1	194440-52400	BOX ASSY, FUSE	1	1						
42A	2	194440-52420	COVER, FUSE BOX	1	1						

N:Old $\xleftarrow[\text{No}]{\text{Yes}}$ New, Q:Old $\xleftarrow[\text{Yes}]{\text{No}}$ New, R:Old $\xleftarrow[\text{Yes}]{\text{Yes}}$ New, S:Old $\xleftarrow[\text{No}]{\text{No}}$ New, W:Add, Z:Discontinued, F:Interchangeable by set, K:Q'ty Change

++ CONTINUE ++

(C)Copy Rights YANMAR CO.,LTD.

Fig.58. ELECTRIC PARTS (FLOOR:FRANCE)

Fig. 58 ELECTRIC PARTS (Floor Shift type:FRANCE)

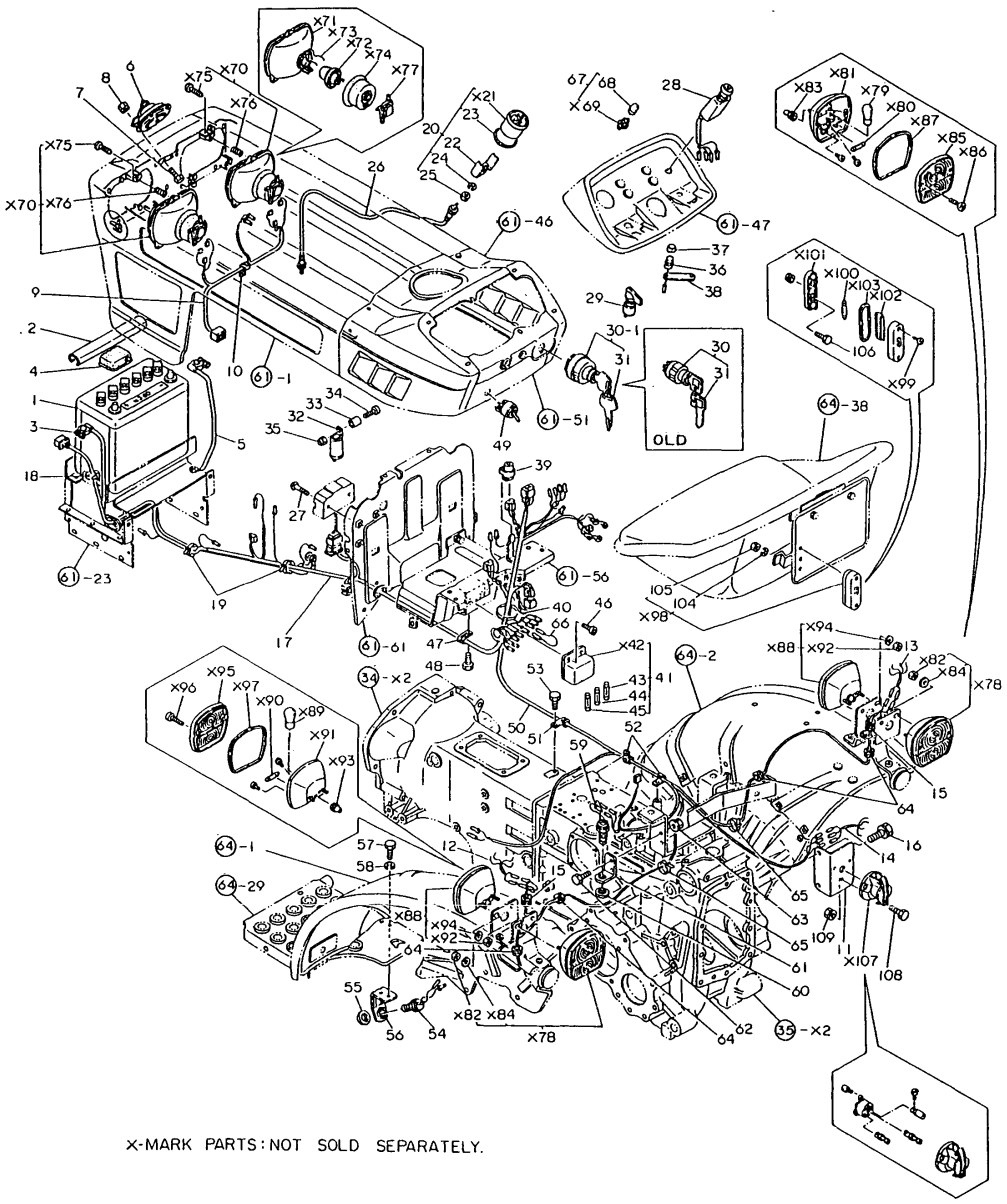

X-MARK PARTS : NOT SOLD SEPARATELY.

0CT10-G22801

58. ELECTRIC PARTS (FLOOR:FRANCE)

(A)=YM186 (FLOOR (D)=YM186D(COLUM
(B)=YM186D(FLOOR (E)=
(C)=YM186 (COLUM (F)=

REF.	LEV.	PARTS NO.	DESCRIPTION	Q'TY (A)	(B)	(C)	(D)	(E)	(F)	I	R
43	2	194145-52820	FUSE 5A	1	1						
44	2	194145-52830	FUSE 10A	2	2						
45	2	194145-52840	FUSE 15A	2	2						
46	1	26587-060202	SCREW M 6X 20	2	2						
47	1	194440-51630	CLAMP, WIRE HARNESS	1	1						
47-1	1	194440-51620	CLAMP, WIRE HARNESS	1	1					S	
	(A=T/# 00511)	(B=T/# 01233)									
48	1	26116-060122	BOLT M 6X 12	1	1					Z	
	(A=T/# 00511)	(B=T/# 01233)									
49	1	194446-83310	SWITCH, FRONT P.T.O.	1	1						
50	1	194448-51120	HARNESS (B), WIRE	1	1						
51	1	194440-51630	CLAMP, WIRE HARNESS	1	1						
52	1	194440-51620	CLAMP, WIRE HARNESS	2	2						
53	1	26116-060122	BOLT M 6X 12	1	1						
54	1	194440-52190	SWITCH, SAFETY START	1	1						
55	1	194240-52210	NUT M22	1	1						
56	1	194446-52220-X	STAY, SAFETY SWITCH	1	1						
57	1	26116-060122	BOLT M 6X 12	2	2						
57-1	1	26106-060122	BOLT M 6X 12 PLATED	2	2					N	
	(A=T/# 00898)	(B=T/# 02355)									
58	1	22217-060000	SPRING WASHER 6	2	2						
59	1	194440-52190	SWITCH, SAFETY START	1	1						
59-1	1	194440-52191	SWITCH, SAFETY START	1	1					N	
	(A=T/# 00844)	(B=T/# 02103)									
60	1	194240-52210	NUT M22	1	1						
61	1	194446-52230-X	STAY, SAFETY SWITCH	1	1						
62	1	26116-060162	BOLT M 6X 16 PLATED	2	2						
62-1	1	26106-060162	BOLT M 6X 16 PLATED	2	2					N	
	(A=T/# 00898)	(B=T/# 02355)									
63	1	194990-22130	NUT W/WASHER 6	2	2						
64	1	194080-58810	GROMMET 8	4	4						
65	1	194150-51620	CLAMP, WIRE HARNESS	2	2						
65-1	1	121750-59890	RETAINER	2	2					N	
	(A=*1981.)	(B=*1981.)									
66	1	194446-51160	WIRE, LEAD	1	1					W	
	(A=T/# 00200)	(B=T/# 00487)									
67	1	194440-55100	LAMP ASSY, INDICATOR	3	3					W	
	(A=*)	(B=*)									
68	2	194440-55820	BULB 12V-3.4W	3	3					W	
	(A=*1981.)	(B=*1981.)									
70	1	(8203)	LIGHT ASSY, HEAD	2	2						1
71	2	(A1594)	CASING ASSY	2	2						1
72	2	(R1415)	BULB C.E.12V 45/40W	2	2						1
73	2	(R1356)	SPRING	2	2						1
74	2	(R1012)	COVER	2	2						1
75	2	(V60)	SCREW	6	6						1
76	2	(R1329)	SPRING, COIL	6	6						1
77	2	(A139-7)	CONNECTOR	2	2						1
78	1	(322)	LIGHT ASSY, REAR	2	2						1
79	2	(D1127)	BULB	2	2						1
80	2	(D1126)	BULB	2	2						1

N:Old $\overset{\text{Yes}}{\underset{\text{No}}{\leftrightarrow}}$ New, Q:Old $\overset{\text{No}}{\underset{\text{Yes}}{\leftrightarrow}}$ New, R:Old $\overset{\text{Yes}}{\underset{\text{Yes}}{\leftrightarrow}}$ New, S:Old $\overset{\text{No}}{\underset{\text{No}}{\leftrightarrow}}$ New, W:Add, Z:Discontinued, F:Interchangeable by set, K:Q'ty Change

++ CONTINUE ++

(C)Copy Rights YANMAR CO.,LTD.

Fig.58. ELECTRIC PARTS (FLOOR:FRANCE)

Fig. 58 ELECTRIC PARTS (Floor Shift type:FRANCE)

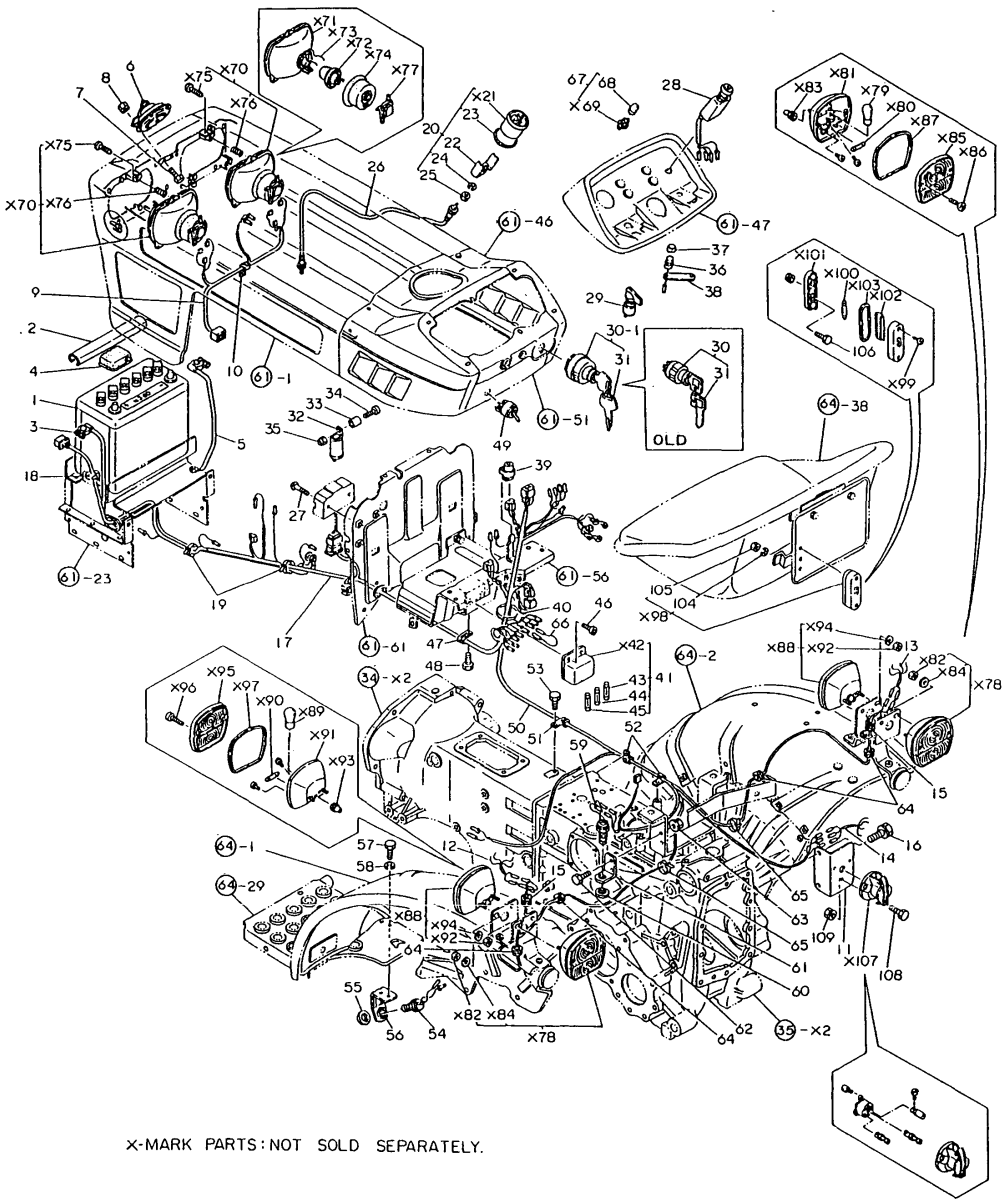

X-MARK PARTS : NOT SOLD SEPARATELY.

0CT10-G22801

58. ELECTRIC PARTS (FLOOR:FRANCE)

(A)=YM186 (FLOOR
(B)=YM186D(FLOOR
(C)=YM186 (COLUM
(D)=YM186D(COLUM
(E)=
(F)=

REF.	LEV.	PARTS NO.	DESCRIPTION	Q'TY (A)	(B)	(C)	(D)	(E)	(F)	I	R
81	2	(SE490)	CASING ASSY	2	2						1
82	2	(R1862)	NUT	4	4						1
83	2	(R1094)	GROMMET	2	2						1
84	2	(R1856)	WASHER	4	4						1
85	2	(G114)	LENS	2	2						1
86	2	(R1853)	SCREW	4	4						1
87	2	(R1260)	EDGING	2	2						1
88	1	(321)	LIGHT ASSY, FRONT	2	2						1
89	2	(D1127)	BULB	2	2						1
90	2	(D1126)	BULB	2	2						1
91	2	(SE490)	CASING ASSY	2	2						1
92	2	(R1862)	NUT	4	4						1
93	2	(R1094)	GROMMET	2	2						1
94	2	(R1856)	WASHER	4	4						1
95	2	(G113)	LENS	2	2						1
96	2	(R1853)	SCREW	4	4						1
97	2	(R1260)	EDGING	2	2						1
98	1	(242NT)	LIGHT ASSY, LICENSE	1	1						1
99	2	(-)	SCREW	2	2						1
100	2	(D1126)	BULB	1	1						1
101	2	(-)	PLATE, SOLE	1	1						1
102	2	(-)	LENS	1	1						1
103	2	(-)	EDGING	1	1						1
104	2	22217-050000	SPRING WASHER 5	2	2						1
105	2	26716-050002	NUT M 5	2	2						1
106	2	26116-050162	BOLT M 5X 16 PLATED	2	2						1
107	1	(-)	COUPLER ASSY	1	1						1
108	1	26116-060202	BOLT M6X20	3	3						
109	1	194990-22040	NUT W/WASHER 6	3	3						

N:Old $\frac{\text{Yes}}{\text{No}}$ New, Q:Old $\frac{\text{No}}{\text{Yes}}$ New, R:Old $\frac{\text{Yes}}{\text{Yes}}$ New, S:Old $\frac{\text{No}}{\text{No}}$ New, W:Add, Z:Discontinued, F:Interchangeable by set, K:Q'ty Change

(C)Copy Rights YANMAR CO.,LTD.

Fig.59. ELECTRIC PARTS (FLOOR:ENGLAND)

Fig. 59 ELECTRIC PARTS (Floor Shift type:ENGLAND)

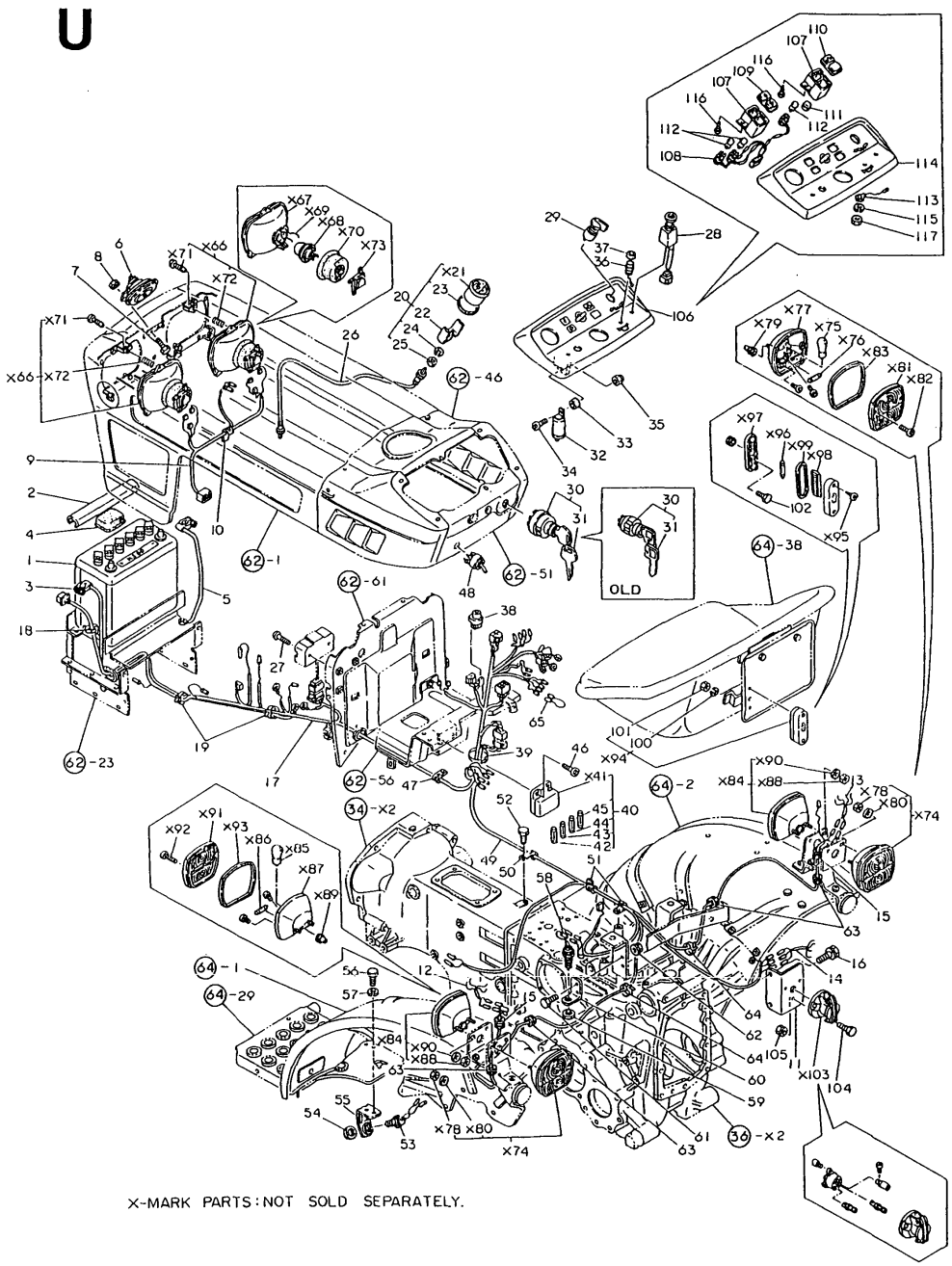

X-MARK PARTS:NOT SOLD SEPARATELY.

0CT10-G22801

59. ELECTRIC PARTS (FLOOR:ENGLAND)

(A)=YM186 (FLOOR
(B)=YM186D(FLOOR
(C)=YM186 (COLUM
(D)=YM186D(COLUM
(E)=
(F)=

REF.	LEV.	PARTS NO.	DESCRIPTION	Q'TY (A)	(B)	(C)	(D)	(E)	(F)	I	R
1	1	194446-51310	BATTERY DR46B24R	1	1						
2	1	194440-51550	COVER, BATTERY	1	1						
3	1	194446-51410	CABLE, BATTERY	1	1						
4	1	194080-51430	INSULATOR	1	1						
5	1	194440-51420	CABLE, BATTERY EARTH	1	1						
6	1	194340-57100	HORN ASSY	1	1						
7	1	26116-060122	BOLT M 6X 12	2	2						
7-1	1	26106-060122	BOLT M 6X 12 PLATED	2	2					N	
	(A=T/# 00898)	(B=T/# 02355)									
8	1	194990-22040	NUT W/WASHER 6	2	2						
9	1	194448-51150	HARNESS (E), WIRE	1	1						
10	1	194440-51630	CLAMP, WIRE HARNESS	1	1						
11	1	194448-51700-X	BRACKET, SOCKET	1	1						
12	1	194240-51800	HARNESS (L), WIRE	1	1						
13	1	194240-51810	HARNESS (R), WIRE	1	1						
14	1	194240-51820	HARNESS, SOCKET	1	1						
15	1	194448-58810	GROMMET 8	2	2						
16	1	26013-120222	BOLT M12X 22	2	2						
17	1	194448-51160	HARNESS (A), WIRE	1	1						
18	1	121750-59890	RETAINER	1	1						
19	1	121750-59890	RETAINER	2	2						
20	1	194432-56100	HOUR-METER ASSY	1	1						
22	2	194432-56170	FITTING	1	1						
23	2	194432-56150	SHEET	1	1						
24	2	22217-040000	SPRING WASHER 4	2	2						
25	2	26716-040002	NUT M 4	2	2						
26	1	194440-56900	CABLE, HOUR-METER	1	1						
27	1	26557-060302	SCREW M 6X 30	2	2						
28	1	194240-52120	SWITCH, LIGHTING	1	1						
29	1	194170-52130	SWITCH, TURN SIGNAL	1	1						
30	1	194322-52110	SWITCH, STARTING	1	1						
31	2	194155-52190	KEY	1	1						
32	1	194080-57202	RELAY	1	1						
33	1	194151-57210	SPACER	1	1						
34	1	26557-050162	SCREW M 5X 16	1	1						
35	1	26346-050002	U-NUT M 4 PLATED	1	1						
36	1	194150-52160	SWITCH, HORN	1	1						
37	1	194150-52170	CAP, HORN SWITCH	1	1						
38	1	194464-57250	RELAY, LAMP CHECK	1	1						
39	1	194250-51660	BAND 250	1	1						
40	1	194240-52400	BOX ASSY, FUSE	1	1						
41A	2	194440-52420	COVER, FUSE BOX	1	1						
42	2	194145-52820	FUSE 5A	1	1						
43	2	194145-52830	FUSE 10A	2	2						
44	2	194145-52840	FUSE 15A	1	1						
45	2	194145-52850	FUSE 20A	2	2						
46	1	26587-060202	SCREW M 6X 20	2	2						
47	1	194440-51620	CLAMP, WIRE HARNESS	1	1						
48	1	194446-83310	SWITCH, FRONT P.T.O.	1	1						
49	1	194448-51170	HARNESS (B), WIRE	1	1						
50	1	194440-51630	CLAMP, WIRE HARNESS	1	1						

N:Old $\overset{\text{Yes}}{\underset{\text{No}}{\leftrightarrow}}$ New, Q:Old $\overset{\text{No}}{\underset{\text{Yes}}{\leftrightarrow}}$ New, R:Old $\overset{\text{Yes}}{\underset{\text{Yes}}{\leftrightarrow}}$ New, S:Old $\overset{\text{No}}{\underset{\text{No}}{\leftrightarrow}}$ New, W:Add, Z:Discontinued, F:Interchangeable by set, K:Q'ty Change

++ CONTINUE ++

(C)Copy Rights YANMAR CO.,LTD.

Fig.59. ELECTRIC PARTS (FLOOR:ENGLAND)

Fig. 59 ELECTRIC PARTS (Floor Shift type:ENGLAND)

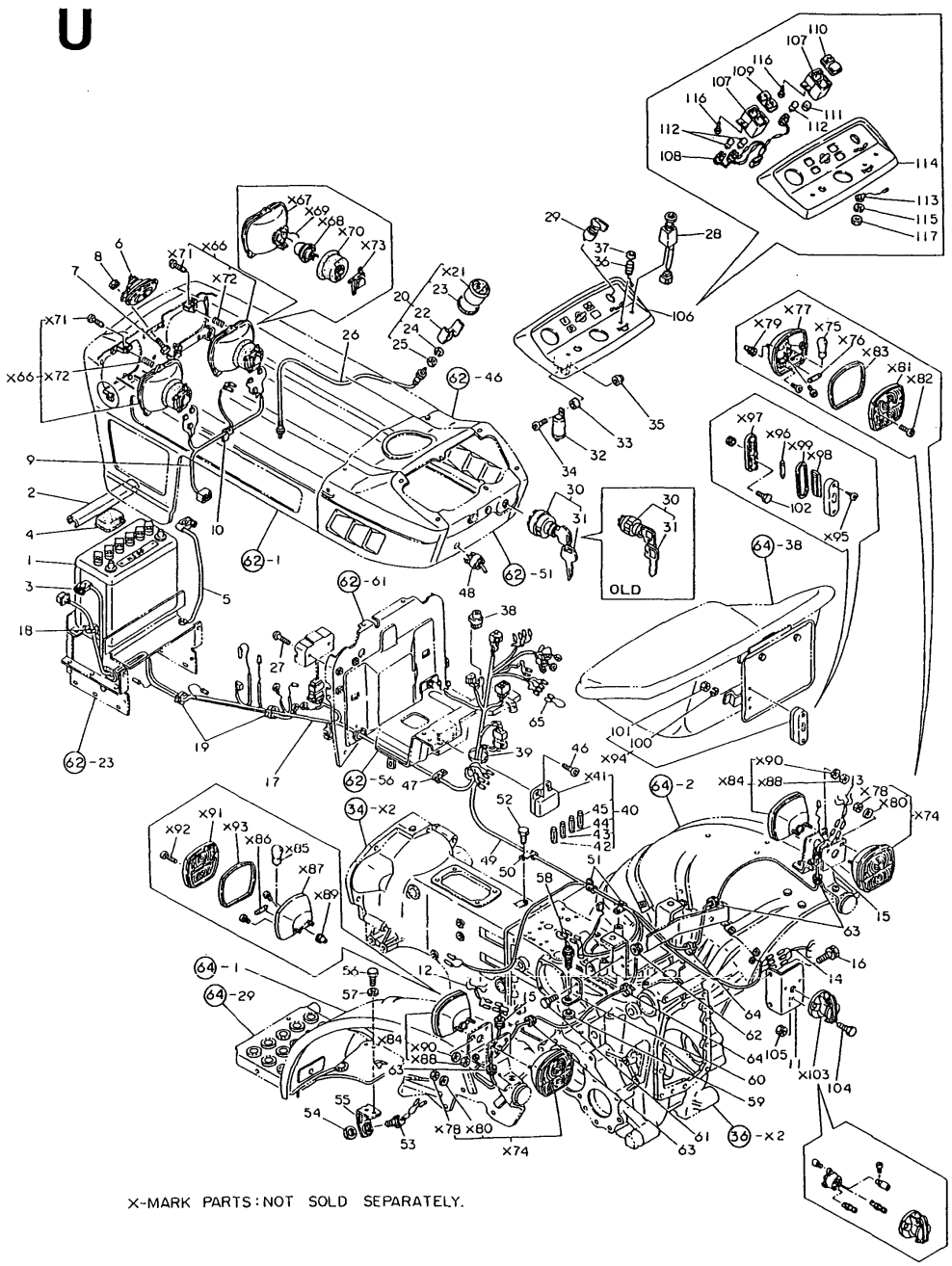

X-MARK PARTS:NOT SOLD SEPARATELY.

59. ELECTRIC PARTS (FLOOR:ENGLAND)

(A)=YM186 (FLOOR (D)=YM186D(COLUM
(B)=YM186D(FLOOR (E)=
(C)=YM186 (COLUM (F)=

REF.	LEV.	PARTS NO.	DESCRIPTION	Q'TY (A)	(B)	(C)	(D)	(E)	(F)	I	R
51	1	194440-51620	CLAMP, WIRE HARNESS	2	2						
52	1	26116-060122	BOLT M 6X 12	1	1						
52-1	1	26106-060122	BOLT M 6X 12 PLATED	1	1					N	
(A=T/# 00898)		(B=T/# 02355)									
53	1	194440-52190	SWITCH, SAFETY START	1	1						
53-1	1	194440-52191	SWITCH, SAFETY START	1	1					N	
(A=T/# 00844)		(B=T/# 02103)									
54	1	194240-52210	NUT M22	1	1						
55	1	194446-52220-X	STAY, SAFETY SWITCH	1	1						
56	1	26116-060122	BOLT M 6X 12	2	2						
56-1	1	26106-060122	BOLT M 6X 12 PLATED	2	2					N	
(A=T/# 00898)		(B=T/# 02355)									
57	1	22217-060000	SPRING WASHER 6	2	2						
58	1	194440-52190	SWITCH, SAFETY START	1	1						
58-1	1	194440-52191	SWITCH, SAFETY START	1	1					N	
(A=T/# 00844)		(B=T/# 02102)									
59	1	194240-52210	NUT M22	1	1						
60	1	194446-52230-X	STAY, SAFETY SWITCH	1	1						
61	1	26116-060162	BOLT M 6X 16 PLATED	2	2						
61-1	1	26106-060162	BOLT M 6X 16 PLATED	2	2					N	
(A=T/# 00898)		(B=T/# 02355)									
62	1	194990-22130	NUT W/WASHER 6	2	2						
63	1	194080-58810	GROMMET 8	4	4						
64	1	121750-59890	RETAINER	2	2						
65	1	194446-51160	WIRE, LEAD	1	1						
66	1	(8203)	LIGHT ASSY, HEAD	2	2						1
67	2	(A1594)	CASING ASSY	2	2						1
68	2	(R1415)	BULB C.E.12V 45/40W	2	2						1
69	2	(R1356)	SPRING	2	2						1
70	2	(R1012)	COVER	2	2						1
71	2	(V60)	SCREW	6	6						1
72	2	(R1329)	SPRING, COIL	6	6						1
73	2	(A139-7)	CONNECTOR	2	2						1
74	1	(322)	LIGHT ASSY, REAR	2	2						1
75	2	(D1127)	BULB	2	2						1
76	2	(D1126)	BULB	2	2						1
77	2	(SE490)	CASING ASSY	2	2						1
78	2	(R1862)	NUT	4	4						1
79	2	(R1094)	GROMMET	2	2						1
80	2	(R1856)	WASHER	4	4						1
81	2	(G114)	LENS	2	2						1
82	2	(R1853)	SCREW	4	4						1
83	2	(R1260)	EDGING	2	2						1
84	1	(321)	LIGHT ASSY, FRONT	2	2						1
85	2	(D1127)	BULB	2	2						1
86	2	(D1126)	BULB	2	2						1
87	2	(SE490)	CASING ASSY	2	2						1
88	2	(R1862)	NUT	4	4						1
89	2	(R1094)	GROMMET	2	2						1
90	2	(R1856)	WASHER	4	4						1
91	2	(G113)	LENS	2	2						1

N:Old $\overset{\text{Yes}}{\underset{\text{No}}{\leftrightarrow}}$ New, Q:Old $\overset{\text{No}}{\underset{\text{Yes}}{\leftrightarrow}}$ New, R:Old $\overset{\text{Yes}}{\underset{\text{Yes}}{\leftrightarrow}}$ New, S:Old $\overset{\text{No}}{\underset{\text{No}}{\leftrightarrow}}$ New, W:Add, Z:Discontinued, F:Interchangeable by set, K:Q'ty Change

++ CONTINUE ++

(C)Copy Rights YANMAR CO.,LTD.

Fig.59. ELECTRIC PARTS (FLOOR:ENGLAND)

Fig. 59 ELECTRIC PARTS (Floor Shift type:ENGLAND)

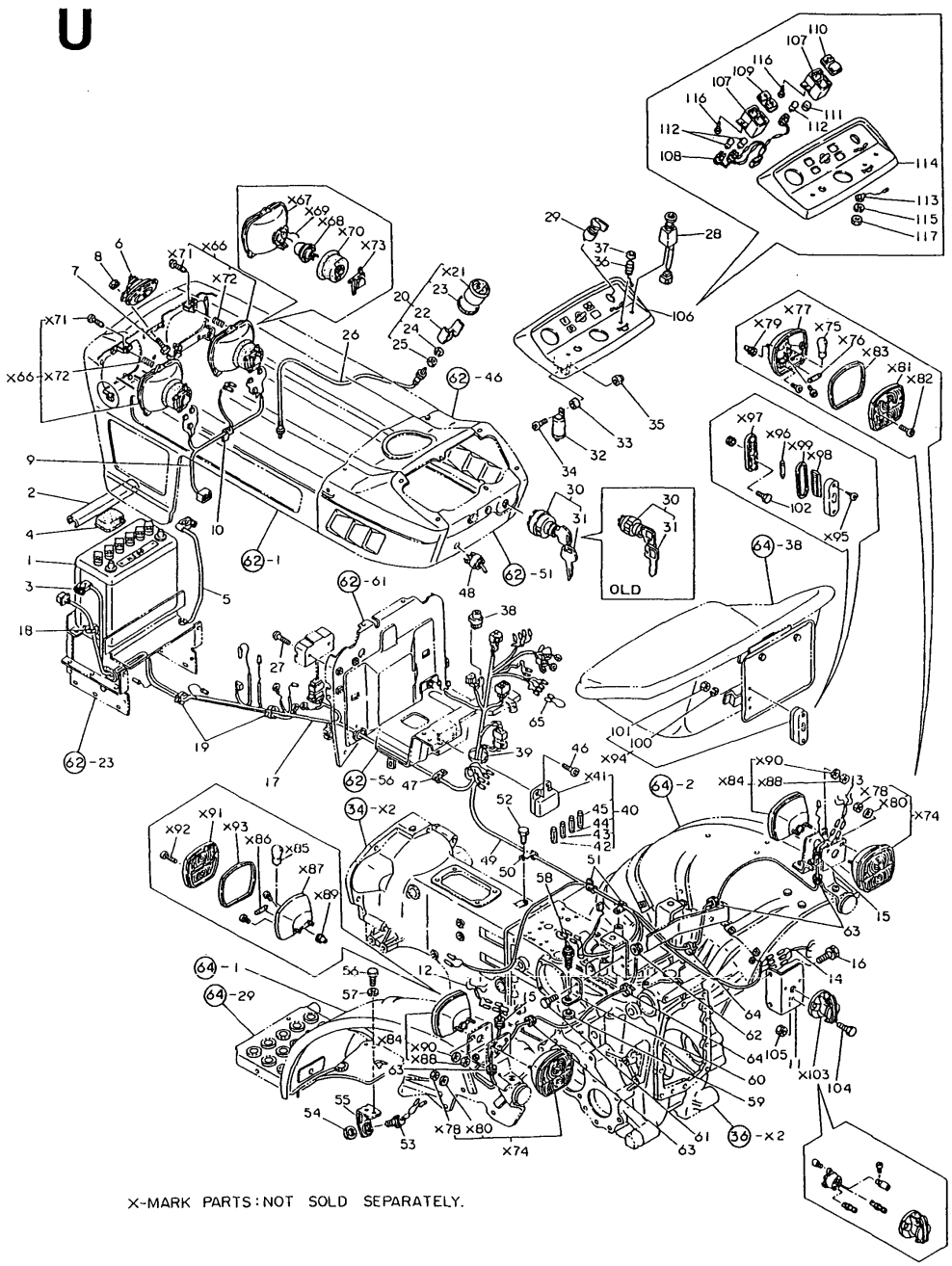

0CT10-G22801

59. ELECTRIC PARTS (FLOOR:ENGLAND)

(A)=YM186 (FLOOR
(B)=YM186D(FLOOR
(C)=YM186 (COLUM
(D)=YM186D(COLUM
(E)=
(F)=

REF.	LEV.	PARTS NO.	DESCRIPTION	Q'TY (A)	(B)	(C)	(D)	(E)	(F)	I	R
92	2	(R1853)	SCREW	4	4						1
93	2	(R1260)	EDGING	2	2						1
94	1	(242NT)	LIGHT ASSY, LICENSE	1	1						1
95	2	(-)	SCREW	2	2						1
96	2	(D1126)	BULB	1	1						1
97	2	(-)	SOLE PLATE	1	1						1
98	2	(-)	LENS	1	1						1
99	2	(-)	EDGING	1	1						1
100	2	22217-050000	SPRING WASHER 5	2	2						1
101	2	26716-050002	NUT M 5	2	2						1
102	2	26116-050162	BOLT M 5X 16 PLATED	2	2						1
103	1	(-)	COUPLER ASSY	1	1						1
104	1	26116-060202	BOLT M6X20	3	3						
105	1	194990-22040	NUT W/WASHER 6	3	3						
106	1	194432-61600	DASHBOARD ASSY	1	1						
107	2	194170-55120	BOX, PILOT	2	2						
108	2	194170-55130	CORD	1	1						
109	2	194170-55150	LENS (A)	1	1						
110	2	194170-55160	LENS (B)	1	1						
111	2	194170-55170	COVER	1	1						
112	2	194155-55820	BULB 12V-1.7W	3	3						
113	2	194432-56130	CORD	1	1						
114	2	194432-61610	PANEL, DASHBOARD	1	1						
115	2	22217-080000	SPRING WASHER 8	2	2						
116	2	22857-400120	SCREW 4X12	4	4						
117	2	26716-080002	NUT M 8	1	1						

N:Old $\frac{\text{Yes}}{\text{No}}$ New, Q:Old $\frac{\text{No}}{\text{Yes}}$ New, R:Old $\frac{\text{Yes}}{\text{Yes}}$ New, S:Old $\frac{\text{No}}{\text{No}}$ New, W:Add, Z:Discontinued, F:Interchangeable by set, K:Q'ty Change

(C)Copy Rights YANMAR CO.,LTD.

Fig.60. HOOD (U.S.A.)

Fig. 60 HOOD (U.S.A.)

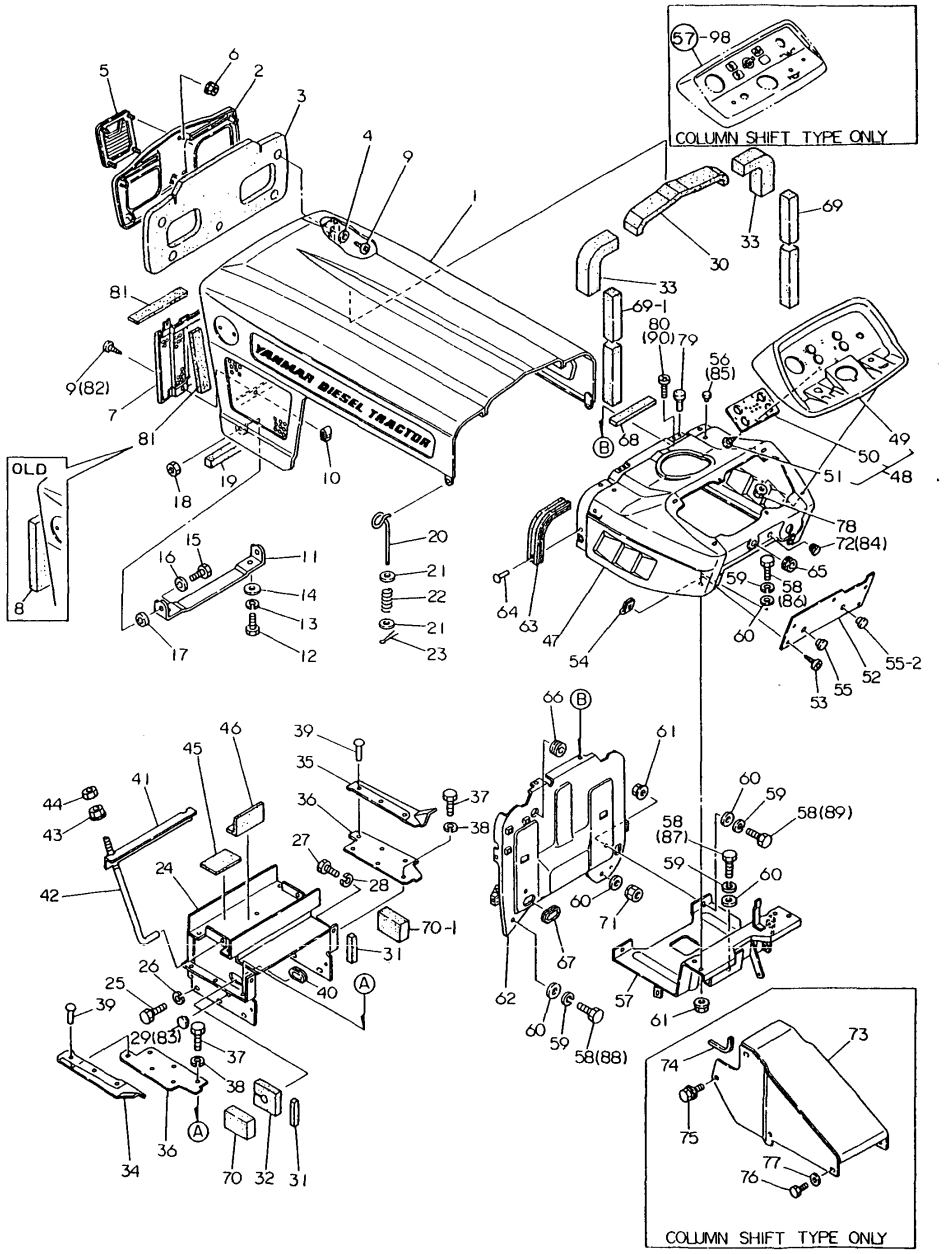

60. HOOD (U.S.A.)

(A)=YM186 (FLOOR (D)=YM186D(COLUM
(B)=YM186D(FLOOR (E)=
(C)=YM186 (COLUM (F)=

REF.	LEV.	PARTS NO.	DESCRIPTION	Q'TY (A)	(B)	(C)	(D)	(E)	(F)	I	R
1	1	194446-61100-R	HOOD	1	1	1	1				
2	1	194420-61250-M	GRILLE, FRONT	1	1						
2-1	1	194420-61250-Q	GRILLE, FRONT	1	1	1	1			N	
	(A=*)	(B=*)									
3	1	194446-61910	PAD, (RUBBER)	1	1	1	1				
4	1	22137-050000	WASHER 5, POLISHED	4	4	4	4			Z	
			(C=*) (D=*)								
5	1	194420-65590	EMBLEM, FLAME	1	1	1	1				
6-1	1	194990-22120	NUT W/WASHER 5	4	4	4	4				
7	1	194422-61371-Q	GRILLE, FRONT LOWER	1	1	1	1				
7-1	1	194446-61310-Q	GRILLE, FRONT LOWER	1	1	1	1			S	1
	(A=*1982.09)	(B=*1982.09)	(C=*1982.09) (D=*1982.09)								
8	1	194446-61920	PAD, (RUBBER)	2	2	2	2			Z	
	(A=*1982.09)	(B=*1982.09)	(C=*1982.09) (D=*1982.09)								
9	1	194420-61640	SCREW M 5X 16	7	7	7	7				
9-1	1	194420-61640	SCREW M 5X 16	5	5	5	5			K	
	(A=T/# 00856)	(B=T/# 02152)	(C=T/# 20958) (D=T/# 42834)								
10	1	194145-61650	NUT M5	2	2	2	2				
11	1	194440-61320-X	HINGE, HOOD	1	1	1	1				
12	1	26116-100202	BOLT M10X 20 PLATED	2	2	2	2				
12-1	1	26106-100202	BOLT M10X 20 PLATED	2	2	2	2			N	
	(A=T/# 00909)	(B=T/# 02372)	(C=T/# 20991) (D=T/# 42957)								
13	1	22217-100000	SPRING WASHER 10	2	2	2	2			Z	
	(A=*)	(B=*)	(C=*) (D=*)								
14-1	1	194145-04810	WASHER 10	2	2	2	2				
14-2	1	194145-61570	WASHER 10	2	2	2	2			N	
	(A=T/# 00713)	(B=T/# 01594)	(C=T/# 20858) (D=T/# 41924)								
15	1	26116-120252	BOLT M12X 25 PLATED	2	2	2	2				
16	1	22137-120000	WASHER 12,POLISHED	2	2	2	2			Z	
	(A=*)	(B=*)	(C=*) (D=*)								
17	1	194190-61250	GASKET	2	2	2	2				
18	1	26716-120002	NUT M12	2	2	2	2				
19	1	194446-61930	PAD, (RUBBER)	1	1	1	1				
20	1	194440-61820	LEVER, LOCK	2	2	2	2				
21	1	22157-060000	WASHER 6	4	4	4	4				
22	1	194440-61830	SPRING, HOOD LOCK	2	2	2	2				
22-1	1	194440-61831	SPRING, HOOD LOCK	2	2	2	2			S	
	(A=T/# 00511)	(B=T/# 01221)	(C=T/# 20101) (D=T/# 40166)								
23	1	22417-200200	COTTER PIN 2.0X20	2	2	2	2				
24	1	194446-61700-X	COVER, DUST	1	1	1	1				
25	1	26116-080162	BOLT M 8X 16 PLATED	6	6	6	6				
25-1	1	26013-080162	BOLT W/WASHER M8X16	6	6	6	6			N	
	(A=*)	(B=*)	(C=*) (D=*)								
25-2	1	26106-080162	BOLT M 8X 16 PLATED	6	6	6	6			N	
	(A=T/# 00909)	(B=T/# 02372)	(C=T/# 20991) (D=T/# 42957)								
26	1	22217-080000	SPRING WASHER 8	6	6	6	6			Z	
	(A=*)	(B=*)	(C=*) (D=*)								
27	1	26116-060102	BOLT M 6X 10 PLATED	2	2	2	2				
27-1	1	26013-060122	BOLT M 6X 12	2	2	2	2			N	
	(A=T/# 00790)	(B=T/# 01965)	(C=T/# 20952) (D=T/# 42632)								
27-2	1	26106-060122	BOLT M 6X 12 PLATED	2	2	2	2			N	

N:Old $\xleftarrow[\text{No}]{\text{Yes}}$ New, Q:Old $\xleftarrow[\text{Yes}]{\text{No}}$ New, R:Old $\xleftarrow[\text{Yes}]{\text{Yes}}$ New, S:Old $\xleftarrow[\text{No}]{\text{No}}$ New, W:Add, Z:Discontinued, F:Interchangeable by set, K:Q'ty Change

++ CONTINUE ++

(C)Copy Rights YANMAR CO.,LTD.

Fig.60. HOOD (U.S.A.)

Fig. 60 HOOD (U.S.A.)

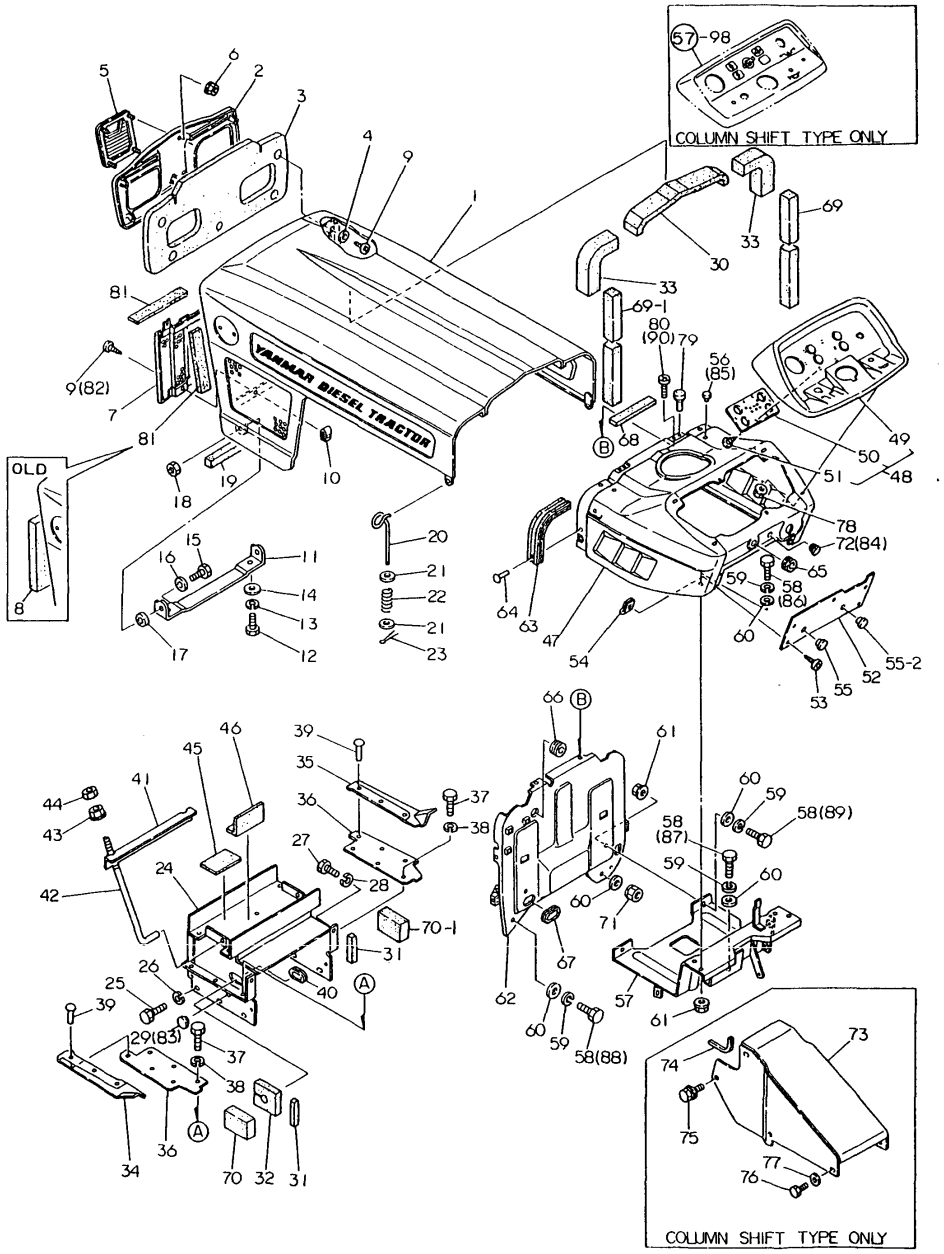

60. HOOD (U.S.A.)

(A)=YM186 (FLOOR (D)=YM186D(COLUM
(B)=YM186D(FLOOR (E)=
(C)=YM186 (COLUM (F)=

REF.	LEV.	PARTS NO.	DESCRIPTION	Q'TY (A)	(B)	(C)	(D)	(E)	(F)	I	R
	(A=T/# 00898)	(B=T/# 02355)	(C=T/# 20991) (D=T/# 42957)								
28	1	22217-060000	SPRING WASHER 6	2	2	2	2			Z	
	(A=T/# 00790)	(B=T/# 01965)	(C=T/# 20952) (D=T/# 42632)								
29	1	194275-62320	CAP 12, RUBBER	1	1	1	1			Z	
	(A=T/# 00713)	(B=T/# 01594)	(C=T/# 20858) (D=T/# 41924)								
30	1	194446-61940	PAD, (RUBBER)	1	1	1	1				
31	1	194446-61950	PAD, (RUBBER)	2	2	2	2				
32	1	194446-61960	PAD, (RUBBER)	1	1	1	1				
33	1	194446-61970	PAD, (RUBBER)	2	2	2	2				
34	1	194446-61860	PAD, (RUBBER)	1	1	1	1				
35	1	194446-61870	PAD, (RUBBER)	1	1	1	1				
36	1	194446-61850-X	PLATE, SIDE SEAL	2	2	2	2				
37	1	26116-060162	BOLT M 6X 16 PLATED	6	6	6	6				
37-1	1	26014-080162	BOLT M 8X 16	6	6	6	6			N	
	(A=T/# 00713)	(B=T/# 01594)	(C=T/# 20858) (D=T/# 41924)								
37-2	1	26106-080162	BOLT M 8X 16 PLATED	6	6	6	6			N	
	(A=T/# 00898)	(B=T/# 02355)	(C=T/# 20991) (D=T/# 42957)								
38	1	22217-060000	SPRING WASHER 6	6	6	6	6			Z	
	(A=T/# 00713)	(B=T/# 01594)	(C=T/# 20858) (D=T/# 41924)								
39	1	194190-61560	RIVET 5X6	6	6	6	6				
40	1	194420-61580	GROMMET 125	1	1	1	1				
41	1	194300-58110	CLAMP, BATTERY	1	1	1	1				
42	1	194440-61740	ROD, BATTERY CLAMP	2	2	2	2				
42-1	1	194440-61741	ROD, BATTERY CLAMP	2	2	2	2			N	
	(A=T/# 00869)	(B=T/# 02306)	(C=T/# 20978) (D=T/# 42906)								
43	1	194990-22130	NUT W/WASHER 6	2	2	2	2				
44	1	26716-060002	NUT M 6	2	2	2	2				
45	1	194190-61761	RUBBER, CUSHION	2	2	2	2				
46	1	194190-61780	RUBBER, CUSHION	2	2	2	2				
47	1	194420-61500-R	DASHBOARD ASSY	1	1	1	1				
47-1	1	194430-61500-R	DASHBOARD ASSY	1	1	1	1			N	
	(A=*1980.)	(B=*1980.)	(C=*1980.) (D=*1980.)								
48	1	194440-61610	PANEL, DASHBOARD	1	1	1	1				
49	2	194440-61670-R	PANEL	1	1	1	1				
50	2	194440-61690	BOARD	1	1	1	1				
51	2	22857-300100	SCREW 3X10,TAPPING	6	6	6	6				
52-1	1	194446-61620-R	COVER, DASHBOARD	1	1	1	1				
52-2	1	194446-61621-R	COVER, DASHBOARD	1	1	1	1			N	
	(A=*1980.)	(B=*1980.)	(C=*1980.) (D=*1980.)								
53	1	194420-61640	SCREW M 5X 16	5	5	5	5				
54	1	194145-61650	NUT M5	5	5	5	5				
55-1	1	194145-64430	GROMMET 12	1	1	1	1				
55-2	1	194145-64430	GROMMET 12	2	2	2	2			K	
	(A=*)	(B=*)	(C=*) (D=*)								
56	1	194446-62310	CAP 8, RUBBER	2	2	2	2			Z	
	(A=T/# 00229)	(B=T/# 00600)	(C=T/# 20858) (D=T/# 41928)								
57	1	194446-61660-X	STAY, PANEL	1	1	1	1				
57-1	1	194500-61660	STAY, PANEL	1	1	1	1			N	
	(A=T/# 00820)	(B=T/# 02048)	(C=T/# 20967) (D=T/# 42778)								
57-2	1	194500-61661	STAY, PANEL	1	1	1	1			N	
	(A=T/# 00820)	(B=T/# 02048)	(C=T/# 20967) (D=T/# 42778)								

N:Old $\overset{\text{Yes}}{\underset{\text{No}}{\leftrightarrow}}$ New, Q:Old $\overset{\text{No}}{\underset{\text{Yes}}{\leftrightarrow}}$ New, R:Old $\overset{\text{Yes}}{\underset{\text{Yes}}{\leftrightarrow}}$ New, S:Old $\overset{\text{No}}{\underset{\text{No}}{\leftrightarrow}}$ New, W:Add, Z:Discontinued, F:Interchangeable by set, K:Q'ty Change

++ CONTINUE ++

(C)Copy Rights YANMAR CO.,LTD.

Fig.60. HOOD (U.S.A.)

Fig. 60 HOOD (U.S.A.)

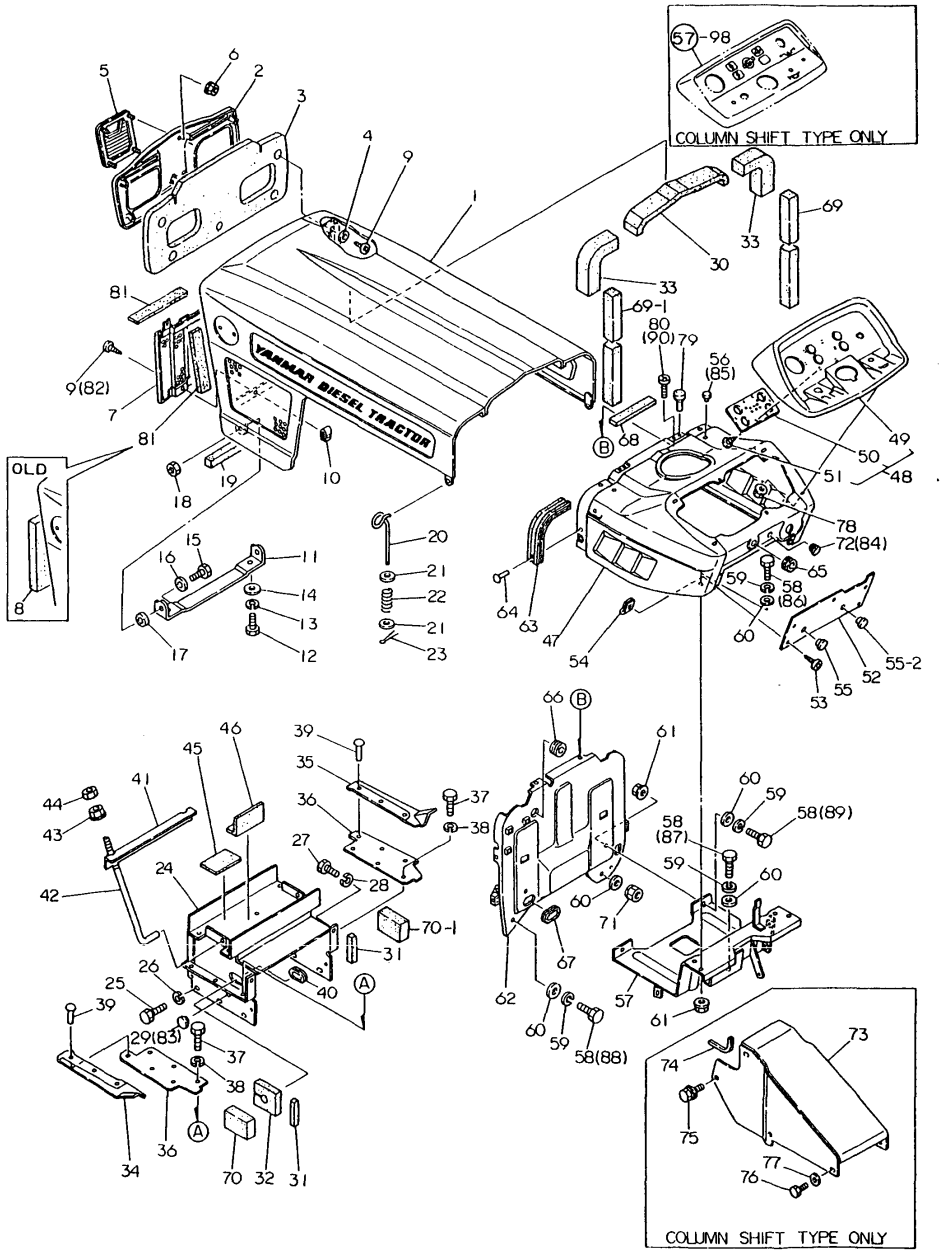

60. HOOD (U.S.A.)

(A)=YM186 (FLOOR (D)=YM186D(COLUM
(B)=YM186D(FLOOR (E)=
(C)=YM186 (COLUM (F)=

REF.	LEV.	PARTS NO.	DESCRIPTION	Q'TY (A)	(B)	(C)	(D)	(E)	(F)	I	R
58	1	26116-080162	BOLT M 8X 16 PLATED	8	8						
58-1	1	26116-080162	BOLT M 8X 16 PLATED	7	7	7	7			K	
	(A=T/# 00229)	(B=T/# 00600)									
58-2	1	26116-080162	BOLT M 8X 16 PLATED	7	7	7	7			Z	
	(A=*1982.12)	(B=*1982.12)	(C=*1982.12) (D=*1982.12)								
59	1	22217-080000	SPRING WASHER 8	4	4	4	4			Z	
	(A=*)	(B=*)	(C=*) (D=*)								
60	1	22137-080000	WASHER 8, POLISHED	8	8						
60-1	1	22137-080000	WASHER 8, POLISHED	6	6	6	6			K	
	(A=T/# 00229)	(B=T/# 00600)									
60-2	1	22137-080000	WASHER 8, POLISHED	6	6	6	6			Z	
	(A=*)	(B=*)	(C=*) (D=*)								
61	1	194990-22140	NUT W/WASHER 8	4	4	4	4				
62	1	194440-61570	PLATE, AIR CUT	1	1	1	1				
62-1	1	194446-61570-X	PLATE, AIR CUT	1	1	1	1			N	
	(A=*1981.)	(B=*1981.)	(C=*1981.) (D=*1981.)								
62-2	1	194446-61571	PLATE, AIR CUT	1	1	1	1			N	
	(A=T/# 00760)	(B=T/# 01756)	(C=T/# 20862) (D=T/# 42407)								
63	1	194440-61550	GASKET, HOOD	2	2	2	2				
64	1	194190-61560	RIVET 5X6	4	4	4	4				
65	1	194080-58810	GROMMET 8	1	1	1	1				
66	1	194162-58830	GROMMET 20	1	1	1	1				
67-1	1	194446-61580	GROMMET 125	1	1	1	1				
68	1	194440-61220	PAD, (RUBBER)	1	1	1	1				
69	1	194446-61981	PAD, (RUBBER)	1	1	1	1			W	
	(A=*1983.)	(B=*1983.)	(C=*1983.) (D=*1983.)								
69-1	1	194446-61981	PAD, (RUBBER)	2	2	2	2			K	
	(A=*)	(B=*)	(C=*) (D=*)								
70	1	194446-61990	PAD, (RUBBER)	1	1	1	1			W	
	(A=*1983.)	(B=*1983.)	(C=*1983.) (D=*1983.)								
70-1	1	194446-61990	PAD, (RUBBER)	2	2	2	2			K	
	(A=*)	(B=*)	(C=*) (D=*)								
71	1	194990-22050	NUT W/WASHER 8	1	1	1	1			W	
	(A=T/# 00229)	(B=T/# 00600)	(C=FROM 1ST) (D=FROM 1ST)								
72	1	194275-62370	GROMMET	1	1	1	1			W	
	(A=*)	(B=*)	(C=FROM 1ST) (D=FROM 1ST)								
72-1	1	194275-62370	GROMMET	1	1	1	1			Z	
	(A=*)	(B=*)	(C=*) (D=*)								
73	1	194500-61670-X	COVER, GEAR CASE	1	1	1	1				
73-1	1	194500-61671	COVER, GEAR BOX	1	1	1	1			N	
	(A=T/# 00820)	(B=T/# 02048)	(C=T/# 20967) (D=T/# 42778)								
74	1	194500-51710	EDGE 100	1	1	1	1				
75	1	26014-060142	BOLT M 6X 14	6	6						
75-1	1	194155-05210	BOLT W/WASHER M6X16	6	6	6	6			N	
	(A=*1982.)	(B=*1982.)									
76	1	26021-050122	SCREW M 5X 12	2	2	2	2				
76-1	1	26116-050102	BOLT M 5X 10 PLATED	2	2	2	2			N	
	(A=*)	(B=*)	(C=*) (D=*)								
77	1	22137-050000	WASHER 5, POLISHED	2	2	2	2			W	
	(A=*)	(B=*)	(C=*) (D=*)								
78	1	194990-22120	NUT W/WASHER 5	6	6	6	6				

N:Old $\frac{\text{Yes}}{\text{No}}$ New, Q:Old $\frac{\text{No}}{\text{Yes}}$ New, R:Old $\frac{\text{Yes}}{\text{Yes}}$ New, S:Old $\frac{\text{No}}{\text{No}}$ New, W:Add, Z:Discontinued, F:Interchangeable by set, K:Q'ty Change

++ CONTINUE ++

(C)Copy Rights YANMAR CO.,LTD.

Fig.60. HOOD (U.S.A.)

Fig. 60 HOOD (U.S.A.)

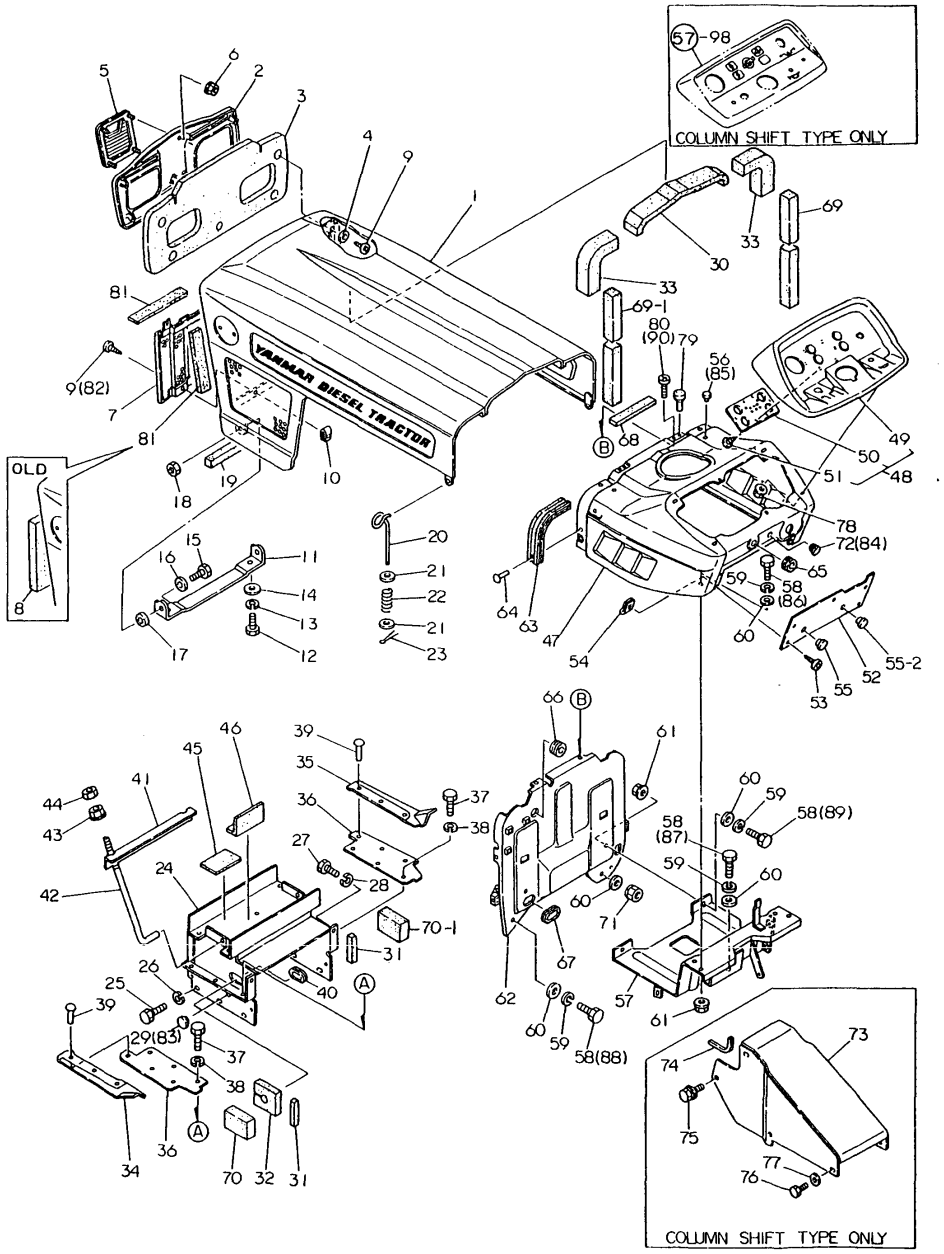

60. HOOD (U.S.A.)

(A)=YM186 (FLOOR (D)=YM186D(COLUM
(B)=YM186D(FLOOR (E)=
(C)=YM186 (COLUM (F)=

REF.	LEV.	PARTS NO.	DESCRIPTION	Q'TY (A)	(B)	(C)	(D)	(E)	(F)	I	R
79	1	194145-61560	RUBBER, CUSHION	2	2	2	2				
80	1	26587-060162	SCREW M 6X 16	4	4	4	4				
80-1	1	26011-060122	BOLT M 6X 12	4	4	4	4			N	
	(A=*)	(B=*)	(C=*) (D=*)								
80-2	1	26011-060122	BOLT M 6X 12	4	4	4	4			Z	
	(A=*1982.10)	(B=*1982.10)	(C=*1982.10) (D=*1982.10)								
81	1	194312-61290	PAD, (RUBBER)	3	3	3	3			W	1
	(A=*1982.09)	(B=*1982.09)	(C=*1982.09) (D=*1982.09)								
82	1	194250-61640	SCREW M 5X 12	2	2	2	2			W	
	(A=T/# 00856)	(B=T/# 02152)	(C=T/# 20958) (D=T/# 42834)								
83	1	194145-64430	GROMMET 12	1	1	1	1			W	
	(A=T/# 00713)	(B=T/# 01594)	(C=T/# 20858) (D=T/# 41924)								
84	1	194275-62310	CAP 10, RUBBER	1	1	1	1			W	
	(A=*)	(B=*)	(C=*) (D=*)								
85	1	194324-62310	CAP 4.5, RUBBER	4	4	4	4			W	
	(A=T/# 00229)	(B=T/# 00600)	(C=T/# 20858) (D=T/# 41928)								
86	1	26011-080162	BOLT M 8X 16	2	2	2	2			W	
	(A=*1982.12)	(B=*1982.12)	(C=*1982.12) (D=*1982.12)								
86-1	1	26106-080162	BOLT M 8X 16 PLATED	2	2	2	2			N	
	(A=T/# 00909)	(B=T/# 02372)	(C=T/# 20991) (D=T/# 42957)								
87	1	26013-080162	BOLT W/WASHER M8X16	2	2	2	2			W	
	(A=*1982.10)	(B=*1982.12)	(C=*1982.10) (D=*1982.10)								
87-1	1	26106-080162	BOLT M 8X 16 PLATED	2	2	2	2			N	
	(A=T/# 00909)	(B=T/# 02372)	(C=T/# 20991) (D=T/# 42957)								
88	1	26013-080162	BOLT W/WASHER M8X16	1	1	1	1			W	
	(A=*1982.12)	(B=*1982.12)	(C=*1982.12) (D=*1982.12)								
88-1	1	26106-080162	BOLT M 8X 16 PLATED	1	1	1	1			N	
	(A=T/# 00909)	(B=T/# 02372)	(C=T/# 20991) (D=T/# 42957)								
89	1	26116-080162	BOLT M 8X 16 PLATED	2	2	2	2			W	
	(A=*1982.12)	(B=*1982.12)	(C=*1982.12) (D=*1982.12)								
89-1	1	26106-080162	BOLT M 8X 16 PLATED	2	2	2	2			N	
	(A=T/# 00909)	(B=T/# 02372)	(C=T/# 20991) (D=T/# 42957)								
90	1	26587-060162	SCREW M 6X 16	4	4	4	4			W	
	(A=*1982.12)	(B=*1982.12)	(C=*1982.12) (D=*1982.12)								

N:Old $\xleftarrow[\text{No}]{\text{Yes}}$ New, Q:Old $\xleftarrow[\text{Yes}]{\text{No}}$ New, R:Old $\xleftarrow[\text{Yes}]{\text{Yes}}$ New, S:Old $\xleftarrow[\text{No}]{\text{No}}$ New, W:Add, Z:Discontinued, F:Interchangeable by set, K:Q'ty Change

(C)Copy Rights YANMAR CO.,LTD.

Fig.61. HOOD (FRANCE)

Fig. 61 HOOD (FRANCE)

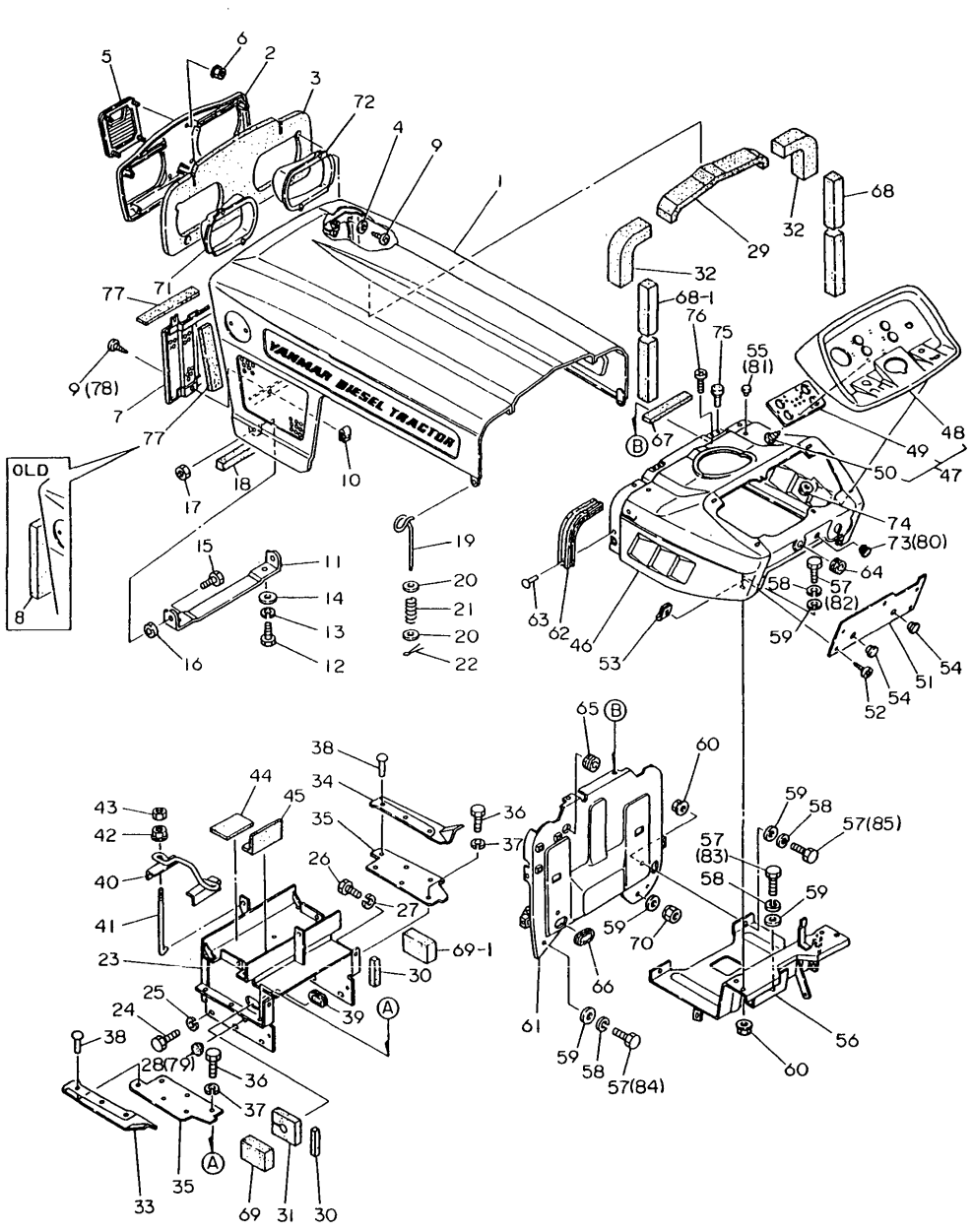

61. HOOD (FRANCE)

(A)=YM186 (FLOOR (D)=YM186D(COLUM
(B)=YM186D(FLOOR (E)=
(C)=YM186 (COLUM (F)=

REF.	LEV.	PARTS NO.	DESCRIPTION	Q'TY (A)	(B)	(C)	(D)	(E)	(F)	I	R
1	1	194448-61100-R	HOOD	1	1	1	1				
2	1	194448-61250	GRILLE, FRONT	1	1	1	1				
3	1	194448-61910	PAD, (RUBBER)	1	1	1	1				
4	1	22137-050000	WASHER 5, POLISHED	4	4	4	4			Z	
	(A=*)	(B=*)	(C=*) (D=*)								
5	1	194420-65590	EMBLEM, FLAME	1	1	1	1				
6-1	1	194990-22120	NUT W/WASHER 5	4	4	4	4				
7	1	194422-61371	GRILLE, FRONT LOWER	1	1	1	1				
7-1	1	194446-61310	GRILLE, FRONT LOWER	1	1	1	1			S	1
	(A=*1982.09)	(B=*1982.09)	(C=*1982.09) (D=*1982.09)								
8	1	194446-61920	PAD, (RUBBER)	2	2	2	2			Z	
	(A=*1982.09)	(B=*1982.09)	(C=*1982.09) (D=*1982.09)								
9	1	194420-61640	SCREW M 5X 16	7	7	7	7				
9-1	1	194420-61640	SCREW M 5X 16	5	5	5	5			K	
	(A=T/# 00856)	(B=T/# 02152)	(C=T/# 20958) (D=T/# 42834)								
10	1	194145-61650	NUT M5	2	2	2	2				
11	1	194440-61320-X	HINGE, HOOD	1	1	1	1				
12	1	26116-100202	BOLT M10X 20 PLATED	2	2	2	2				
12-1	1	26013-100202	BOLT W/WASHER M10X20	2	2	2	2			N	
	(A=*)	(B=*)	(C=*) (D=*)								
12-2	1	26106-100202	BOLT M10X 20 PLATED	2	2	2	2			N	
	(A=T/# 00909)	(B=T/# 02372)	(C=T/# 20991) (D=T/# 42957)								
13	1	22217-100000	SPRING WASHER 10	2	2	2	2			Z	
	(A=*)	(B=*)	(C=*) (D=*)								
14	1	194145-04810	WASHER 10	2	2	2	2				
14-1	1	194145-61570	WASHER 10	2	2	2	2			N	
	(A=T/# 00713)	(B=T/# 01594)	(C=T/# 20858) (D=T/# 41924)								
15	1	26116-120252	BOLT M12X 25 PLATED	2	2	2	2				
16	1	194190-61250	GASKET	2	2	2	2				
17	1	26716-120002	NUT M12	2	2	2	2				
18	1	194446-61930	PAD, (RUBBER)	1	1	1	1				
19	1	194440-61820	LEVER, LOCK	2	2	2	2				
20	1	22157-060000	WASHER 6	4	4	4	4				
21	1	194440-61831	SPRING, HOOD LOCK	2	2	2	2				
22	1	22417-200200	COTTER PIN 2.0X20	2	2	2	2				
23	1	194448-61700-X	COVER, DUST	1	1	1	1				
24	1	26116-080162	BOLT M 8X 16 PLATED	6	6	6	6				
24-1	1	26013-080162	BOLT W/WASHER M8X16	6	6	6	6			N	
	(A=*)	(B=*)	(C=*) (D=*)								
24-2	1	26106-080162	BOLT M 8X 16 PLATED	6	6	6	6			N	
	(A=T/# 00909)	(B=T/# 02372)	(C=T/# 20991) (D=T/# 42957)								
25	1	22217-080000	SPRING WASHER 8	6	6	6	6			Z	
	(A=*)	(B=*)	(C=*) (D=*)								
26	1	26116-060102	BOLT M 6X 10 PLATED	2	2	2	2				
26-1	1	26013-060122	BOLT M 6X 12	2	2	2	2			N	
	(A=T/# 00790)	(B=T/# 01965)	(C=T/# 20952) (D=T/# 42632)								
26-2	1	26106-060122	BOLT M 6X 12 PLATED	2	2	2	2			N	
	(A=T/# 00898)	(B=T/# 02355)	(C=T/# 20991) (D=T/# 42957)								
27	1	22217-060000	SPRING WASHER 6	2	2	2	2			Z	
	(A=T/# 00790)	(B=T/# 01965)	(C=T/# 20952) (D=T/# 42632)								
28	1	194275-62320	CAP 12, RUBBER	1	1	1	1			Z	

N:Old $\overset{\text{Yes}}{\underset{\text{No}}{\leftrightarrow}}$ New, Q:Old $\overset{\text{No}}{\underset{\text{Yes}}{\leftrightarrow}}$ New, R:Old $\overset{\text{Yes}}{\underset{\text{Yes}}{\leftrightarrow}}$ New, S:Old $\overset{\text{No}}{\underset{\text{No}}{\leftrightarrow}}$ New, W:Add, Z:Discontinued, F:Interchangeable by set, K:Q'ty Change

++ CONTINUE ++

(C)Copy Rights YANMAR CO.,LTD.

Fig.61. HOOD (FRANCE)

Fig. 61 HOOD (FRANCE)

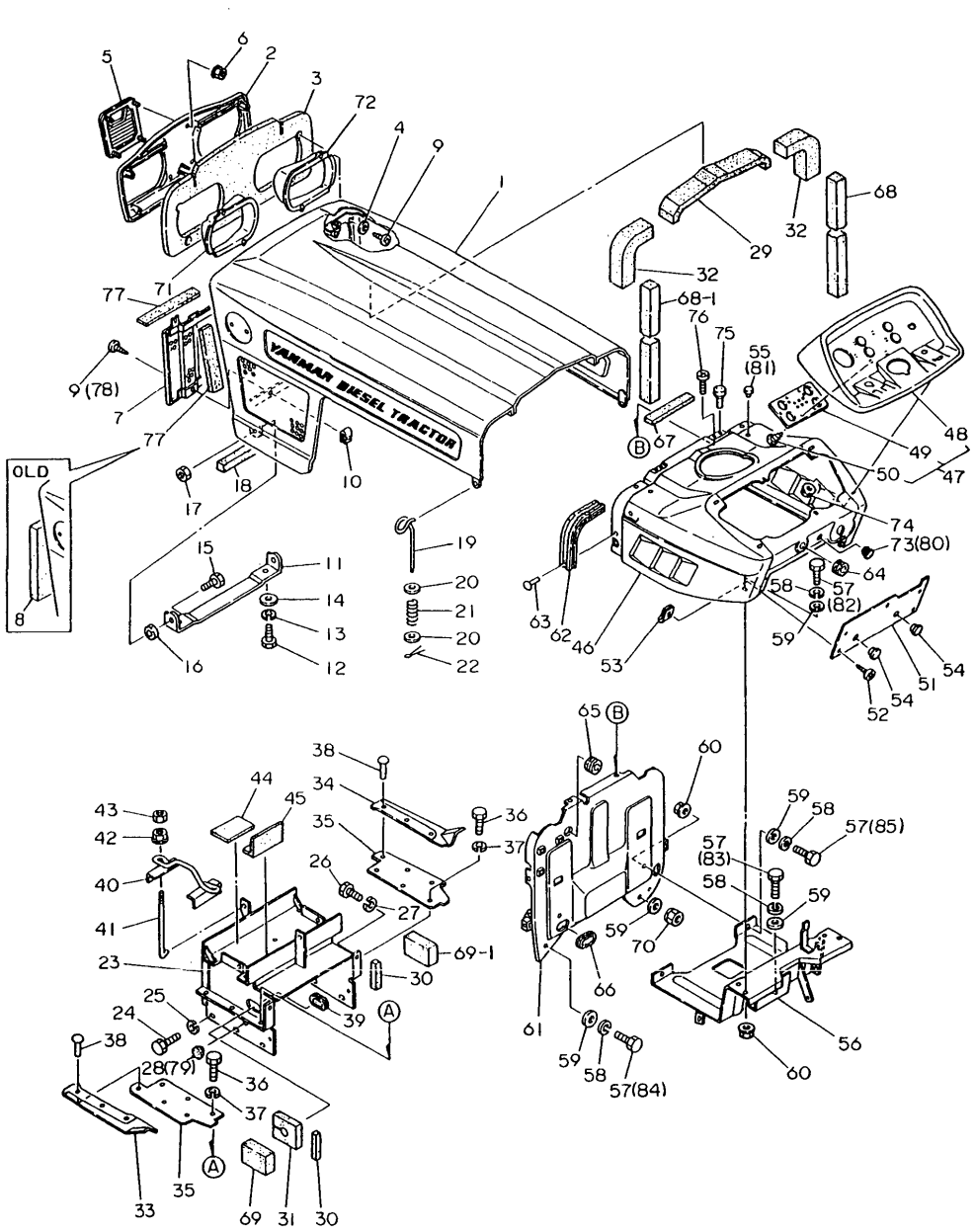

61. HOOD (FRANCE)

(A)=YM186 (FLOOR (D)=YM186D(COLUM
(B)=YM186D(FLOOR (E)=
(C)=YM186 (COLUM (F)=

REF.	LEV.	PARTS NO.	DESCRIPTION	Q'TY (A)	(B)	(C)	(D)	(E)	(F)	I	R
	(A=T/# 00713)	(B=T/# 01594)	(C=T/# 20858) (D=T/# 41924)								
29	1	194446-61940	PAD, (RUBBER)	1	1	1	1				
30	1	194446-61950	PAD, (RUBBER)	2	2	2	2				
31	1	194446-61960	PAD, (RUBBER)	1	1	1	1				
32	1	194446-61970	PAD, (RUBBER)	2	2	2	2				
33	1	194446-61860	PAD, (RUBBER)	1	1	1	1				
34	1	194446-61870	PAD, (RUBBER)	1	1	1	1				
35	1	194446-61850-X	PLATE, SIDE SEAL	2	2	2	2				
36	1	26116-060162	BOLT M 6X 16 PLATED	6	6	6	6				
36-1	1	26014-080162	BOLT M 8X 16	6	6	6	6			N	
	(A=T/# 00713)	(B=T/# 01594)	(C=T/# 20858) (D=T/# 41924)								
36-2	1	26106-080162	BOLT M 8X 16 PLATED	6	6	6	6			N	
	(A=T/# 00898)	(B=T/# 02355)	(C=T/# 20991) (D=T/# 42957)								
37	1	22217-060000	SPRING WASHER 6	6	6	6	6			Z	
	(A=T/# 00713)	(B=T/# 01594)	(C=T/# 20858) (D=T/# 41924)								
38	1	194190-61560	RIVET 5X6	6	6	6	6				
39	1	194420-61580	GROMMET 125	1	1	1	1				
40	1	194448-51560-X	CLAMP, BATTERY	1	1	1	1				
41	1	194150-61740	ROD, BATTERY CLAMP	2	2	2	2				
42	1	194990-22130	NUT W/WASHER 6	2	2	2	2				
43	1	26716-060002	NUT M 6	2	2	2	2				
44	1	194190-61761	RUBBER, CUSHION	2	2	2	2				
45	1	194190-61780	RUBBER, CUSHION	2	2	2	2				
46	1	194430-61500-R	DASHBOARD ASSY	1	1	1	1				
47	1	194440-61610	PANEL, DASHBOARD	1	1	1	1				
48	2	194440-61670-R	PANEL	1	1	1	1				
49	2	194440-61690	BOARD	1	1	1	1				
50	2	22857-300100	SCREW 3X10,TAPPING	6	6	6	6				
51	1	194446-61620-R	COVER, DASHBOARD	1	1	1	1				
51-1	1	194446-61621-R	COVER, DASHBOARD	1	1	1	1			N	
	(A=*1980.)	(B=*1980.)	(C=*1980.) (D=*1980.)								
52	1	194420-61640	SCREW M 5X 16	5	5	5	5				
53	1	194145-61650	NUT M5	5	5	5	5				
54	1	194145-64430	GROMMET 12	2	2	2	2				
55	1	194446-62310	CAP 8, RUBBER	2	2	2	2			Z	
	(A=T/# 00229)	(B=T/# 00600)	(C=T/# 20858) (D=T/# 41928)								
56	1	194446-61660-X	STAY, PANEL	1	1	1	1				
57	1	26116-080162	BOLT M 8X 16 PLATED	8	8						
57-1	1	26116-080162	BOLT M 8X 16 PLATED	7	7	7	7			K	
	(A=T/# 00229)	(B=T/# 00600)									
57-2	1	26116-080162	BOLT M 8X 16 PLATED	7	7	7	7			Z	
	(A=*1982.12)	(B=*1982.12)	(C=*1982.12) (D=*1982.12)								
58	1	22217-080000	SPRING WASHER 8	4	4	4	4			Z	
	(A=*)	(B=*)	(C=*) (D=*)								
59	1	22137-080000	WASHER 8, POLISHED	8	8						
59-1	1	22137-080000	WASHER 8, POLISHED	6	6	6	6			K	
	(A=T/# 00229)	(B=T/# 00600)									
59-2	1	22137-080000	WASHER 8, POLISHED	6	6	6	6			Z	
	(A=*)	(B=*)	(C=*) (D=*)								
60	1	194990-22140	NUT W/WASHER 8	4	4	4	4				
61	1	194440-61570	PLATE, AIR CUT	1	1	1	1				

N:Old $\xleftarrow[\text{No}]{\text{Yes}}$ New, Q:Old $\xleftarrow[\text{Yes}]{\text{No}}$ New, R:Old $\xleftarrow[\text{Yes}]{\text{Yes}}$ New, S:Old $\xleftarrow[\text{No}]{\text{No}}$ New, W:Add, Z:Discontinued, F:Interchangeable by set, K:Q'ty Change

++ CONTINUE ++

(C)Copy Rights YANMAR CO.,LTD.

Fig.61. HOOD (FRANCE)

Fig. 61 HOOD (FRANCE)

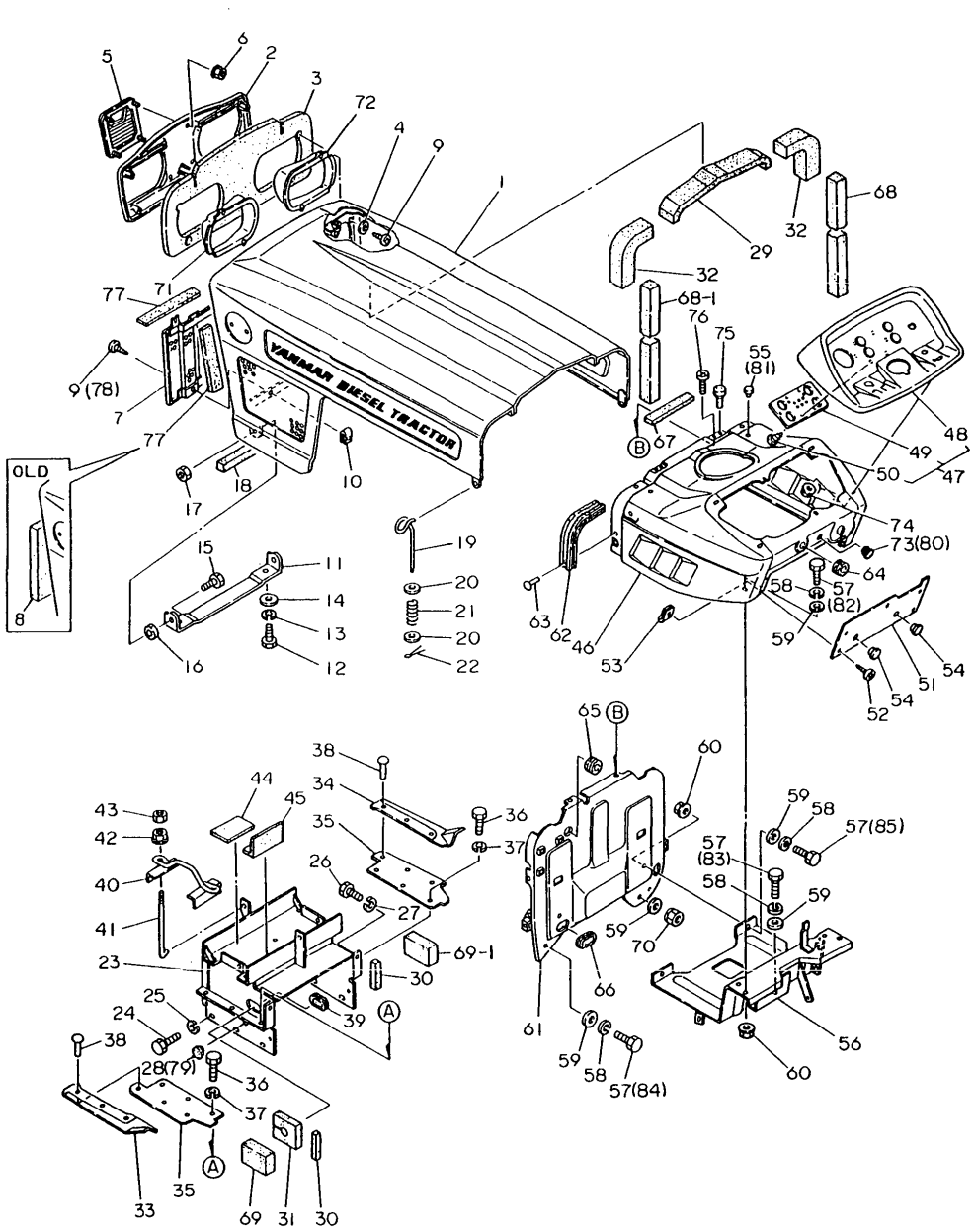

61. HOOD (FRANCE)

(A)=YM186 (FLOOR (D)=YM186D(COLUM
(B)=YM186D(FLOOR (E)=
(C)=YM186 (COLUM (F)=

REF.	LEV.	PARTS NO.	DESCRIPTION	Q'TY (A)	(B)	(C)	(D)	(E)	(F)	I	R
61-1	1	194446-61570-X	PLATE, AIR CUT	1	1	1	1			N	
	(A=*1981.)	(B=*1981.)	(C=*1981.) (D=*1981.)								
61-2	1	194446-61571	PLATE, AIR CUT	1	1	1	1			N	
	(A=T/# 00760)	(B=T/# 01756)	(C=T/# 20862) (D=T/# 42407)								
62	1	194440-61550	GASKET, HOOD	2	2	2	2				
63	1	194190-61560	RIVET 5X6	4	4	4	4				
64	1	194080-58810	GROMMET 8	1	1	1	1				
65	1	194162-58830	GROMMET 20	1	1	1	1				
66	1	194446-61580	GROMMET 125	1	1	1	1				
67	1	194440-61220	PAD, (RUBBER)	1	1	1	1				
68	1	194446-61981	PAD, (RUBBER)	1	1	1	1				
68-1	1	194446-61981	PAD, (RUBBER)	2	2	2	2			K	
	(A=*)	(B=*)	(C=*) (D=*)								
69	1	194446-61990	PAD, (RUBBER)	1	1	1	1				
69-1	1	194446-61990	PAD, (RUBBER)	2	2	2	2			K	
	(A=*)	(B=*)	(C=*) (D=*)								
70	1	194990-22050	NUT W/WASHER 8	1	1	1	1			W	
	(A=T/# 00229)	(B=T/# 00600)	(C=FROM 1ST) (D=FROM 1ST)								
71	1	194448-53350	HOOD (L), HEAD LAMP	1	1	1	1				
72	1	194448-53360	HOOD (R), HEAD LAMP	1	1	1	1				
73	1	194275-62370	GROMMET	1	1	1	1			Z	
	(A=*)	(B=*)	(C=*) (D=*)								
74	1	194990-22120	NUT W/WASHER 5	6	6	6	6				
75	1	194145-61560	RUBBER, CUSHION	2	2	2	2				
76	1	26587-060162	SCREW M 6X 16	4	4	4	4				
76-1	1	26011-060122	BOLT M 6X 12	4	4	4	4			N	
	(A=*1982.10)	(B=*1982.12)	(C=*1982.09) (D=*1982.10)								
77	1	194312-61290	PAD, (RUBBER)	3	3	3	3			W	1
	(A=*1982.09)	(B=*1982.09)	(C=*1982.09) (D=*1982.09)								
78	1	194250-61640	SCREW M 5X 12	2	2	2	2			W	
	(A=T/# 00856)	(B=T/# 02152)	(C=T/# 20958) (D=T/# 42834)								
79	1	194145-64430	GROMMET 12	1	1	1	1			W	
	(A=T/# 00713)	(B=T/# 01594)	(C=T/# 20858) (D=T/# 41924)								
80	1	194275-62310	CAP 10, RUBBER	1	1	1	1			W	
	(A=*)	(B=*)	(C=*) (D=*)								
81	1	194324-62310	CAP 4.5, RUBBER	4	4	4	4			W	
	(A=T/# 00229)	(B=T/# 00600)	(C=T/# 20858) (D=T/# 41928)								
82	1	26011-080162	BOLT M 8X 16	2	2	2	2			W	
	(A=*1982.12)	(B=*1982.12)	(C=*1982.12) (D=*1982.12)								
82-1	1	26106-080162	BOLT M 8X 16 PLATED	2	2	2	2			N	
	(A=T/# 00909)	(B=T/# 02372)	(C=T/# 20991) (D=T/# 42957)								
83	1	26013-080162	BOLT W/WASHER M8X16	2	2	2	2			W	
	(A=*1982.10)	(B=*1982.10)	(C=*1982.10) (D=*1982.10)								
83-1	1	26106-080162	BOLT M 8X 16 PLATED	2	2	2	2			N	
	(A=T/# 00909)	(B=T/# 02372)	(C=T/# 20991) (D=T/# 42957)								
84	1	26013-080162	BOLT W/WASHER M8X16	1	1	1	1			W	
	(A=*1982.12)	(B=*1982.12)	(C=*1982.12) (D=*1982.12)								
84-1	1	26106-080162	BOLT M 8X 16 PLATED	1	1	1	1			N	
	(A=T/# 00909)	(B=T/# 02372)	(C=T/# 20991) (D=T/# 42957)								
85	1	26116-080162	BOLT M 8X 16 PLATED	2	2	2	2			W	
	(A=*1982.12)	(B=*1982.12)	(C=*1982.12) (D=*1982.12)								

N:Old $\overset{\text{Yes}}{\underset{\text{No}}{\leftrightarrow}}$ New, Q:Old $\overset{\text{No}}{\underset{\text{Yes}}{\leftrightarrow}}$ New, R:Old $\overset{\text{Yes}}{\underset{\text{Yes}}{\leftrightarrow}}$ New, S:Old $\overset{\text{No}}{\underset{\text{No}}{\leftrightarrow}}$ New, W:Add, Z:Discontinued, F:Interchangeable by set, K:Q'ty Change

++ CONTINUE ++

(C)Copy Rights YANMAR CO.,LTD.

Fig.61. HOOD (FRANCE)

Fig. 61 HOOD (FRANCE)

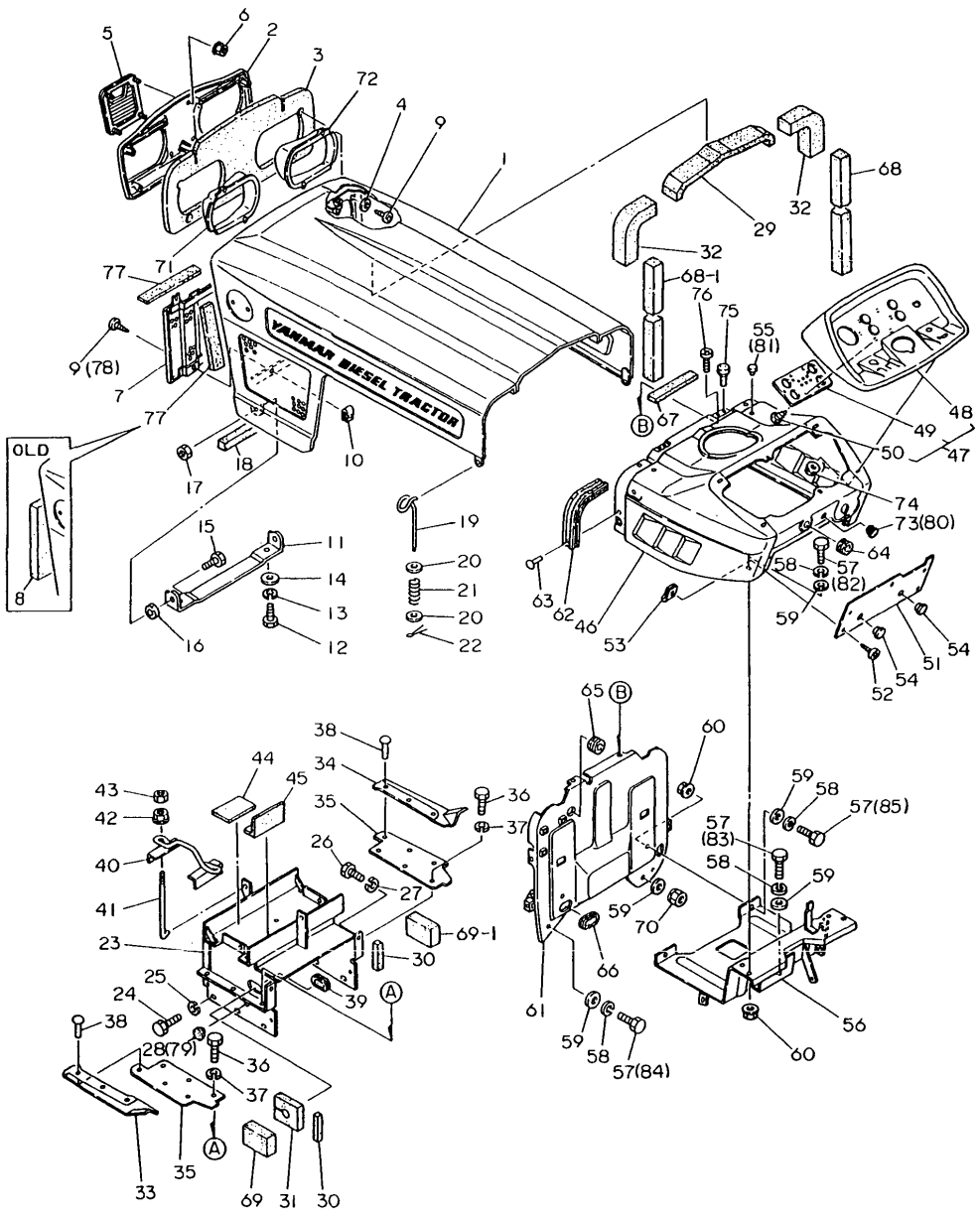

61. HOOD (FRANCE)

(A)=YM186 (FLOOR
(B)=YM186D(FLOOR
(C)=YM186 (COLUM
(D)=YM186D(COLUM
(E)=
(F)=

REF.	LEV.	PARTS NO.	DESCRIPTION	Q'TY (A)	(B)	(C)	(D)	(E)	(F)	I	R
85-1	1	26106-080162	BOLT M 8X 16 PLATED	2	2	2	2			N	
	(A=T/# 00909)	(B=T/# 02372)	(C=T/# 20991) (D=T/# 42957)								

N:Old ←Yes/No→ New, Q:Old ←No/Yes→ New, R:Old ←Yes/Yes→ New, S:Old ←No/No→ New, W:Add, Z:Discontinued, F:Interchangeable by set, K:Q'ty Change

(C)Copy Rights YANMAR CO.,LTD.

Fig.62. HOOD (ENGLAND)

Fig. 62 HOOD (ENGLAND)

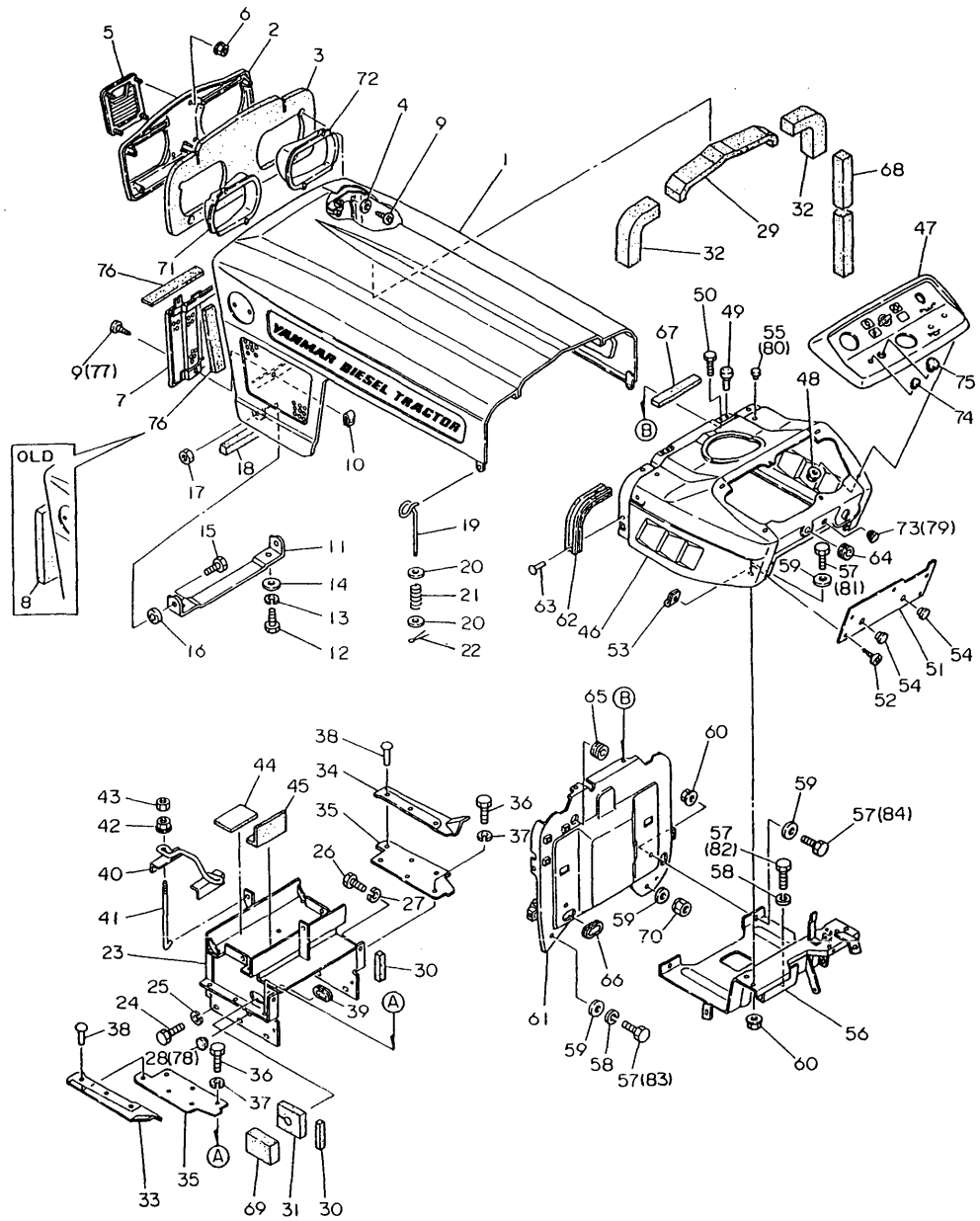

62. HOOD (ENGLAND)

(A)=YM186 (FLOOR (D)=YM186D(COLUM
(B)=YM186D(FLOOR (E)=
(C)=YM186 (COLUM (F)=

REF.	LEV.	PARTS NO.	DESCRIPTION	Q'TY (A)	(B)	(C)	(D)	(E)	(F)	I	R
1	1	194448-61100-R	HOOD	1	1	1	1				
2	1	194448-61250	GRILLE, FRONT	1	1	1	1				
3	1	194448-61910	PAD, (RUBBER)	1	1	1	1				
4	1	22137-050000	WASHER 5, POLISHED	4	4	4	4			Z	
	(A=*)	(B=*)	(C=*) (D=*)								
5	1	194420-65590	EMBLEM, FLAME	1	1	1	1				
6	1	194990-22120	NUT W/WASHER 5	4	4	4	4				
7	1	194422-61371	GRILLE(LOWER), FRONT	1	1	1	1				
7-1	1	194446-61310	GRILLE, FRONT LOWER	1	1	1	1			S	1
	(A=*1982.09)	(B=*1982.09)	(C=*1982.09) (D=*1982.09)								
8	1	194446-61920	PAD, (RUBBER)	2	2	2	2			Z	
	(A=*1982.09)	(B=*1982.09)	(C=*1982.09) (D=*1982.09)								
9	1	194420-61640	SCREW M 5X 16	7	7	7	7				
9-1	1	194420-61640	SCREW M 5X 16	5	5	5	5			K	
	(A=T/# 00856)	(B=T/# 02152)	(C=T/# 20958) (D=T/# 42834)								
10	1	194145-61650	NUT M5	2	2	2	2				
11	1	194440-61320-X	HINGE, HOOD	1	1	1	1				
12	1	26116-100202	BOLT M10X 20 PLATED	2	2	2	2				
12-1	1	26013-100202	BOLT W/WASHER M10X20	2	2	2	2			N	
	(A=*)	(B=*)	(C=*) (D=*)								
12-2	1	26106-100202	BOLT M10X 20 PLATED	2	2	2	2			N	
	(A=T/# 00909)	(B=T/# 02372)	(C=T/# 20991) (D=T/3 42957)								
13	1	22217-100000	SPRING WASHER 10	2	2	2	2			Z	
	(A=*)	(B=*)	(C=*) (D=*)								
14	1	194145-61570	WASHER 10	2	2	2	2				
15	1	26116-120252	BOLT M12X 25 PLATED	2	2	2	2				
16	1	194190-61250	GASKET	2	2	2	2				
17	1	26716-120002	NUT M12	2	2	2	2				
18	1	194446-61930	PAD, (RUBBER)	1	1	1	1				
19	1	194440-61820	LEVER, LOCK	2	2	2	2				
20	1	22157-060000	WASHER 6	4	4	4	4				
21	1	194440-61831	SPRING, HOOD LOCK	2	2	2	2				
22	1	22417-200200	COTTER PIN 2.0X20	2	2	2	2				
23	1	194448-61700-X	COVER, DUST	1	1	1	1				
24	1	26116-080162	BOLT M 8X 16 PLATED	6	6	6	6				
24-1	1	26013-080162	BOLT W/WASHER M8X16	6	6	6	6			N	
	(A=*)	(B=*)	(C=*) (D=*)								
24-2	1	26106-080162	BOLT M 8X 16 PLATED	6	6	6	6			N	
	(A=T/# 00909)	(B=T/# 02372)	(C=T/# 20991) (D=T/# 42957)								
25	1	22217-080000	SPRING WASHER 8	6	6	6	6			Z	
	(A=*)	(B=*)	(C=*) (D=*)								
26	1	26116-060102	BOLT M 6X 10 PLATED	2	2	2	2				
26-1	1	26013-060122	BOLT M 6X 12	2	2	2	2			N	
	(A=T/# 00790)	(B=T/# 01965)	(C=T/# 20952) (D=T/# 42632)								
26-2	1	26106-060122	BOLT M 6X 12 PLATED	2	2	2	2			N	
	(A=T/# 00898)	(B=T/# 02355)	(C=T/# 20991) (D=T/# 42957)								
27	1	22217-060000	SPRING WASHER 6	2	2	2	2			Z	
	(A=T/# 00790)	(B=T/# 01965)	(C=T/# 20952) (D=T/# 42632)								
28	1	194275-62320	CAP 12, RUBBER	1	1	1	1			Z	
	(A=T/# 00713)	(B=T/# 01594)	(C=T/# 20858) (D=T/# 41924)								
29	1	194446-61940	PAD, (RUBBER)	1	1	1	1				

N:Old $\overset{\text{Yes}}{\underset{\text{No}}{\leftrightarrow}}$ New, Q:Old $\overset{\text{No}}{\underset{\text{Yes}}{\leftrightarrow}}$ New, R:Old $\overset{\text{Yes}}{\underset{\text{Yes}}{\leftrightarrow}}$ New, S:Old $\overset{\text{No}}{\underset{\text{No}}{\leftrightarrow}}$ New, W:Add, Z:Discontinued, F:Interchangeable by set, K:Q'ty Change

++ CONTINUE ++

(C)Copy Rights YANMAR CO.,LTD.

Fig.62. HOOD (ENGLAND)

Fig. 62 HOOD (ENGLAND)

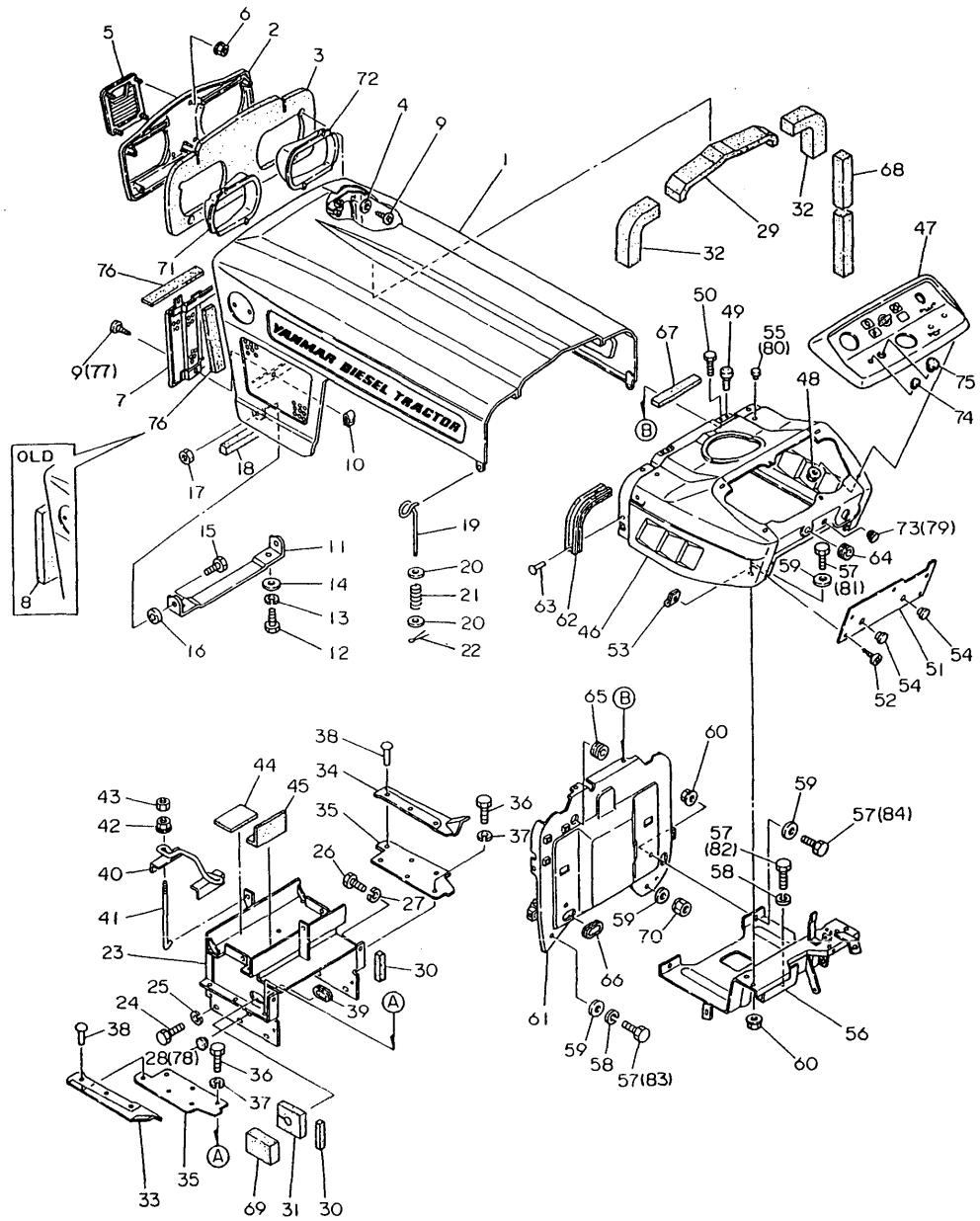

62. HOOD (ENGLAND)

(A)=YM186 (FLOOR (D)=YM186D(COLUM
(B)=YM186D(FLOOR (E)=
(C)=YM186 (COLUM (F)=

REF.	LEV.	PARTS NO.	DESCRIPTION	Q'TY (A)	(B)	(C)	(D)	(E)	(F)	I	R
30	1	194446-61950	PAD, (RUBBER)	2	2	2	2				
31	1	194446-61960	PAD, (RUBBER)	1	1	1	1				
32	1	194446-61970	PAD, (RUBBER)	2	2	2	2				
33	1	194446-61860	PAD, (RUBBER)	1	1	1	1				
34	1	194446-61870	PAD, (RUBBER)	1	1	1	1				
35	1	194446-61850-X	PLATE, SIDE SEAL	2	2	2	2				
36	1	26116-060162	BOLT M 6X 16 PLATED	6	6	6	6				
36-1	1	26014-080162	BOLT M 8X 16	6	6	6	6				N
	(A=T/# 00713)	(B=T/# 01594)	(C=T/# 20858)	(D=T/# 41924)							
36-2	1	26106-080162	BOLT M 8X 16 PLATED	6	6	6	6				N
	(A=T/# 00898)	(B=T/# 02355)	(C=T/# 20991)	(D=T/# 42957)							
37	1	22217-060000	SPRING WASHER 6	6	6	6	6				Z
	(A=T/# 00713)	(B=T/# 01594)	(C=T/# 20858)	(D=T/# 41924)							
38	1	194190-61560	RIVET 5X6	6	6	6	6				
39	1	194420-61580	GROMMET 125	1	1	1	1				
40	1	194448-51560-U	CLAMP, BATTERY	1	1	1	1				
41	1	194150-61740	ROD, BATTERY CLAMP	2	2	2	2				
42	1	194990-22130	NUT W/WASHER 6	2	2	2	2				
43	1	26716-060002	NUT M 6	2	2	2	2				
44	1	194190-61761	RUBBER, CUSHION	2	2	2	2				
45	1	194190-61780	RUBBER, CUSHION	2	2	2	2				
46	1	194430-61500-R	DASHBOARD ASSY	1	1	1	1				
47	1	194432-61600	DASHBOARD ASSY	1	1	1	1				
48	1	194990-22120	NUT W/WASHER 5	6	6	6	6				
49	1	194145-61560	RUBBER, CUSHION	2	2	2	2				
50	1	26011-060122	BOLT M 6X 12	4	4	4	4				
51	1	194446-61620-R	COVER, DASHBOARD	1	1	1	1				
51-1	1	194446-61621-R	COVER, DASHBOARD	1	1	1	1				N
	(A=*1980.)	(B=*1980.)	(C=*1980.)	(D=*1980.)							
52	1	194420-61640	SCREW M 5X 16	5	5	5	5				
53	1	194145-61650	NUT M5	5	5	5	5				
54	1	194145-64430	GROMMET 12	2	2	2	2				
55	1	194446-62310	CAP 8, RUBBER	2	2	2	2				Z
	(A=T/# 00229)	(B=T/# 00600)	(C=T/# 20858)	(D=T/# 41928)							
56	1	194446-61660-X	STAY, PANEL	1	1	1	1				
57	1	26116-080162	BOLT M 8X 16 PLATED	7	7	7	7				Z
	(A=*1982.12)	(B=*1982.12)	(C=*1982.12)	(D=*1982.12)							
58	1	22217-080000	SPRING WASHER 8	4	4	4	4				Z
	(A=*)	(B=*)	(C=*)	(D=*)							
59	1	22137-080000	WASHER 8, POLISHED	6	6	6	6				Z
	(A=*)	(B=*)	(C=*)	(D=*)							
60	1	194990-22140	NUT W/WASHER 8	4	4	4	4				
61	1	194446-61570-X	PLATE, AIR CUT	1	1	1	1				
61-1	1	194446-61571	PLATE, AIR CUT	1	1	1	1				N
	(A=T/# 00760)	(B=T/# 01756)	(C=T/# 20862)	(D=T/# 42407)							
62	1	194440-61550	GASKET, HOOD	2	2	2	2				
63	1	194190-61560	RIVET 5X6	4	4	4	4				
64	1	194080-58810	GROMMET 8	1	1	1	1				
65	1	194162-58830	GROMMET 20	1	1	1	1				
66	1	194446-61580	GROMMET 125	1	1	1	1				
67	1	194440-61220	PAD, (RUBBER)	1	1	1	1				

N:Old $\overset{\text{Yes}}{\underset{\text{No}}{\leftrightarrow}}$ New, Q:Old $\overset{\text{No}}{\underset{\text{Yes}}{\leftrightarrow}}$ New, R:Old $\overset{\text{Yes}}{\underset{\text{Yes}}{\leftrightarrow}}$ New, S:Old $\overset{\text{No}}{\underset{\text{No}}{\leftrightarrow}}$ New, W:Add, Z:Discontinued, F:Interchangeable by set, K:Q'ty Change

++ CONTINUE ++

(C)Copy Rights YANMAR CO.,LTD.

Fig.62. HOOD (ENGLAND)

Fig. 62 HOOD (ENGLAND)

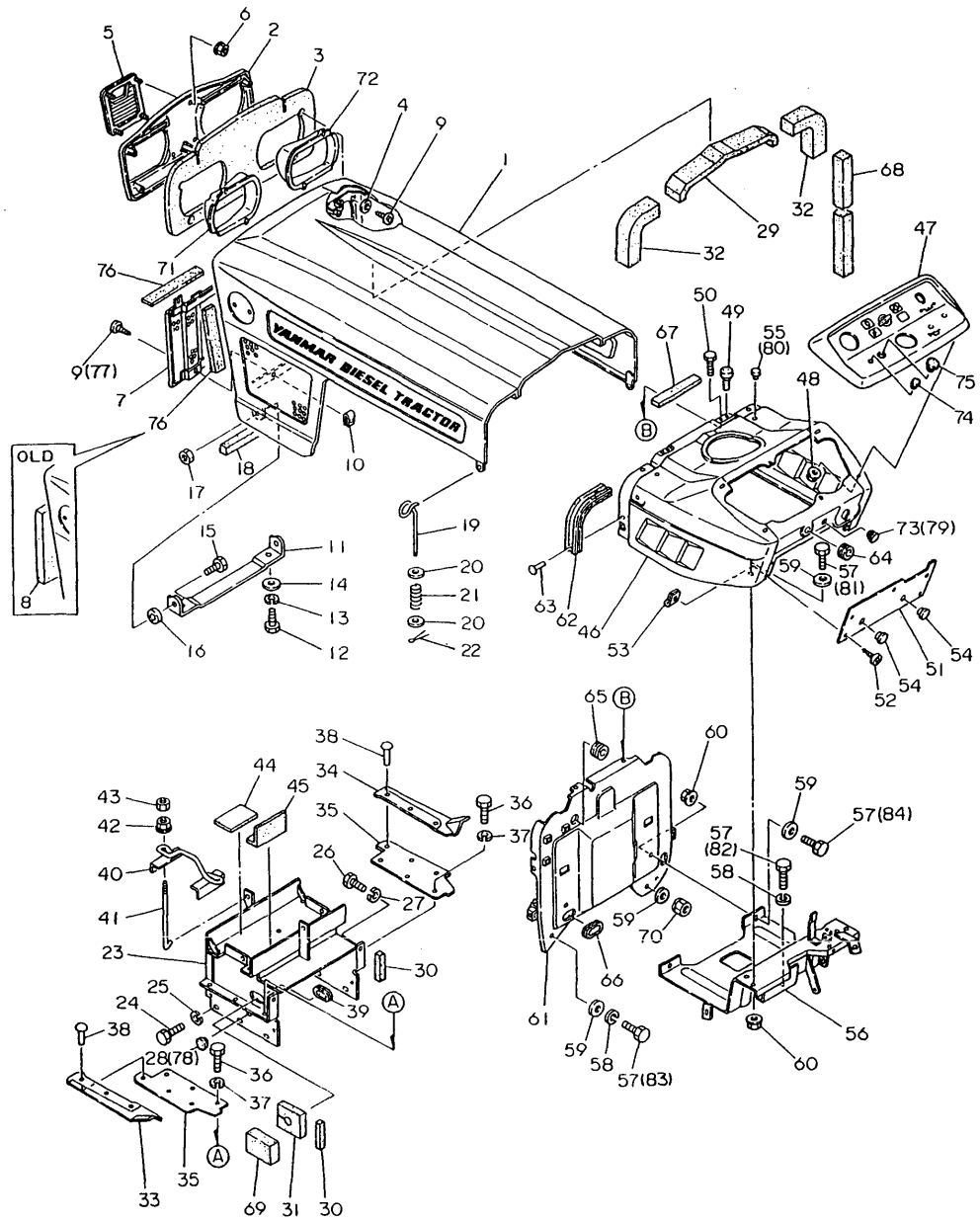

62. HOOD (ENGLAND)

(A)=YM186 (FLOOR
(B)=YM186D(FLOOR
(C)=YM186 (COLUM
(D)=YM186D(COLUM
(E)=
(F)=

REF.	LEV.	PARTS NO.	DESCRIPTION	Q'TY (A)	(B)	(C)	(D)	(E)	(F)	I	R
68	1	194446-61981	PAD, (RUBBER)	1	1	1	1				
69	1	194446-61990	PAD, (RUBBER)	1	1	1	1				
70	1	194990-22050	NUT W/WASHER 8	1	1	1	1				
71	1	194448-53350	HOOD (L), HEAD LAMP	1	1	1	1				
72	1	194448-53360	HOOD (R), HEAD LAMP	1	1	1	1				
73	1	194275-62370	GROMMET	1	1	1	1			Z	
	(A=*)	(B=*)	(C=*) (D=*)								
74	1	194275-62310	CAP 10, RUBBER	1	1	1	1				
75	1	194448-61620	GROMMET 20.5	1	1	1	1				
76	1	194312-61290	PAD, (RUBBER)	3	3	3	3			W	1
	(A=*1982.09)	(B=*1982.09)	(C=*1982.09) (D=*1982.09)								
77	1	194250-61640	SCREW M 5X 12	2	2	2	2			W	
	(A=T/# 00856)	(B=T/# 02152)	(C=T/# 20958) (D=T/# 42834)								
78	1	194145-64430	GROMMET 12	1	1	1	1			W	
	(A=T/# 00713)	(B=T/# 01594)	(C=T/# 20858) (D=T/# 41924)								
79	1	194275-62310	CAP 10, RUBBER	1	1	1	1			W	
	(A=*)	(B=*)	(C=*) (D=*)								
80	1	194324-62310	CAP 4.5, RUBBER	4	4	4	4			W	
	(A=T/# 00229)	(B=T/# 00600)	(C=T/# 20858) (D=T/# 41928)								
81	1	26011-080162	BOLT M 8X 16	2	2	2	2			W	
	(A=*1982.12)	(B=*1982.12)	(C=*1982.12) (D=*1982.12)								
81-1	1	26106-080162	BOLT M 8X 16 PLATED	2	2	2	2			N	
	(A=T/# 00909)	(B=T/# 02372)	(C=T/# 20991) (D=T/# 42957)								
82	1	26013-080162	BOLT W/WASHER M8X16	2	2	2	2			W	
	(A=*1982.10)	(B=*1982.10)	(C=*1982.10) (D=*1982.10)								
82-1	1	26106-080162	BOLT M 8X 16 PLATED	2	2	2	2			N	
	(A=T/# 00909)	(B=T/# 02372)	(C=T/# 20991) (D=T/# 42957)								
83	1	26013-080162	BOLT W/WASHER M8X16	1	1	1	1			W	
	(A=*1982.12)	(B=*1982.12)	(C=*1982.12) (D=*1982.12)								
83-1	1	26106-080162	BOLT M 8X 16 PLATED	1	1	1	1			N	
	(A=T/# 00909)	(B=T/# 02372)	(C=T/# 20991) (D=T/# 42957)								
84	1	26116-080162	BOLT M 8X 16 PLATED	2	2	2	2			W	
	(A=*1982.12)	(B=*1982.12)	(C=*1982.12) (D=*1982.12)								
84-1	1	26106-080162	BOLT M 8X 16 PLATED	2	2	2	2			N	
	(A=T/# 00909)	(B=T/# 02372)	(C=T/# 20991) (D=T/# 42957)								

N:Old $\overset{\text{Yes}}{\underset{\text{No}}{\leftrightarrow}}$ New, Q:Old $\overset{\text{No}}{\underset{\text{Yes}}{\leftrightarrow}}$ New, R:Old $\overset{\text{Yes}}{\underset{\text{Yes}}{\leftrightarrow}}$ New, S:Old $\overset{\text{No}}{\underset{\text{No}}{\leftrightarrow}}$ New, W:Add, Z:Discontinued, F:Interchangeable by set, K:Q'ty Change

(C)Copy Rights YANMAR CO.,LTD.

Fig.63. FENDER (U.S.A.)

Fig. 63 FENDER (U.S.A.)

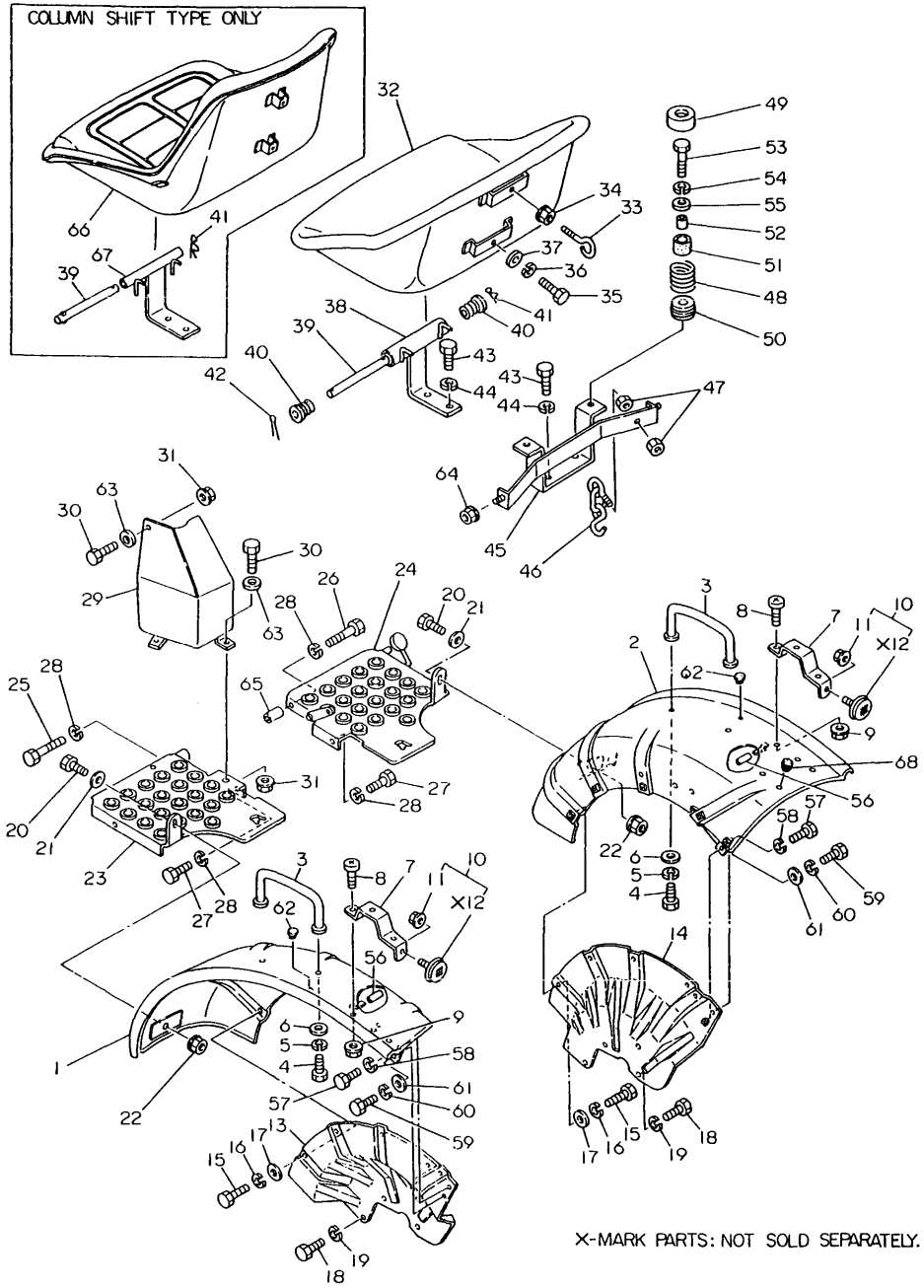

63. FENDER (U.S.A.)

(A)=YM186 (FLOOR (D)=YM186D(COLUM
(B)=YM186D(FLOOR (E)=
(C)=YM186 (COLUM (F)=

REF.	LEV.	PARTS NO.	DESCRIPTION	Q'TY (A)	(B)	(C)	(D)	(E)	(F)	I	R
1	1	194446-62110-R	FENDER (L)	1	1	1	1				
2	1	194446-62120-R	FENDER (R)	1	1	1	1				
3	1	194262-62400-R	BAR, ASSIST	2	2	2	2				
4	1	26116-080162	BOLT M 8X 16 PLATED	4	4	4	4				
4-1	1	26013-080162	BOLT W/WASHER M8X16	4	4	4	4			N	
	(A=*)	(B=*)	(C=*) (D=*)								
4-2	1	26106-080162	BOLT M 8X 16 PLATED	4	4	4	4			N	
	(A=T/# 00909)	(B=T/# 02372)	(C=T/# 20991) (D=T/# 42957)								
5	1	22217-080000	SPRING WASHER 8	4	4	4	4			Z	
	(A=*)	(B=*)	(C=*) (D=*)								
6	1	22137-080000	WASHER 8, POLISHED	4	4	4	4				
7	1	194446-62180-R	BRACKET	2	2	2	2				
8	1	26587-080162	SCREW M 8X 16	4	4	4	4				
9	1	194990-22140	NUT W/WASHER 8	4	4	4	4				
10	1	194740-76200	REFLECTOR	2	2	2	2				
11-1	2	194990-22030	NUT W/WASHER 5	2	2	2	2				
13-1	1	194440-62150-R	BRACKET, FENDER	1	1	1	1				
14-1	1	194440-62160-R	BRACKET, FENDER	1	1	1	1				
15	1	26116-080162	BOLT M 8X 16 PLATED	14	14	14	14				
15-1	1	26116-080162	BOLT M 8X 16 PLATED	8	8	8	8			K	
	(A=*)	(B=*)	(C=*) (D=*)								
15-2	1	26013-080162	BOLT W/WASHER M8X16	8	8	8	8			N	
	(A=*)	(B=*)	(C=*) (D=*)								
15-3	1	26106-080162	BOLT M 8X 16 PLATED	8	8	8	8			N	
	(A=T/# 00909)	(B=T/# 02372)	(C=T/# 20991) (D=T/# 42957)								
16	1	22217-080000	SPRING WASHER 8	14	14	14	14				
16-1	1	22217-080000	SPRING WASHER 8	8	8	8	8			K	
	(A=*)	(B=*)	(C=*) (D=*)								
16-2	1	22217-080000	SPRING WASHER 8	8	8	8	8			Z	
	(A=*)	(B=*)	(C=*) (D=*)								
17	1	22137-080000	WASHER 8, POLISHED	14	14	14	14				
17-1	1	22137-080000	WASHER 8, POLISHED	8	8	8	8			K	
	(A=*)	(B=*)	(C=*) (D=*)								
18	1	26116-100162	BOLT M10X 16 PLATED	6	6	6	6				
18-1	1	26013-100162	BOLT M10X 16	6	6	6	6			N	
	(A=*)	(B=*)	(C=*) (D=*)								
18-2	1	26106-100162	BOLT M10X 16 PLATED	6	6	6	6			N	
	(A=T/# 00909)	(B=T/# 02372)	(C=T/# 20991) (D=T/# 42957)								
19	1	22217-100000	SPRING WASHER 10	6	6	6	6			Z	
	(A=*)	(B=*)	(C=*) (D=*)								
20	1	26116-080162	BOLT M 8X 16 PLATED	2	2	2	2				
20-1	1	26011-080162	BOLT M 8X 16	2	2	2	2			N	
	(A=*)	(B=*)	(C=*) (D=*)								
20-2	1	26106-080162	BOLT M 8X 16 PLATED	2	2	2	2			N	
	(A=T/# 00909)	(B=T/# 02372)	(C=T/# 20991) (D=T/# 42957)								
21	1	22137-080000	WASHER 8, POLISHED	2	2	2	2			Z	
	(A=*)	(B=*)	(C=*) (D=*)								
22	1	194990-22140	NUT W/WASHER 8	2	2	2	2				
23	1	194446-62510-X	STEP (L)	1	1	1	1				
24	1	194446-62520-X	STEP (R)	1	1	1	1				
25	1	26116-080502	BOLT M 8X 50 PLATED	1	1	1	1				

N:Old $\xleftarrow[\text{No}]{\text{Yes}}$ New, Q:Old $\xleftarrow[\text{Yes}]{\text{No}}$ New, R:Old $\xleftarrow[\text{Yes}]{\text{Yes}}$ New, S:Old $\xleftarrow[\text{No}]{\text{No}}$ New, W:Add, Z:Discontinued, F:Interchangeable by set, K:Q'ty Change

++ CONTINUE ++

(C)Copy Rights YANMAR CO.,LTD.

Fig.63. FENDER (U.S.A.)

Fig. 63 FENDER (U.S.A.)

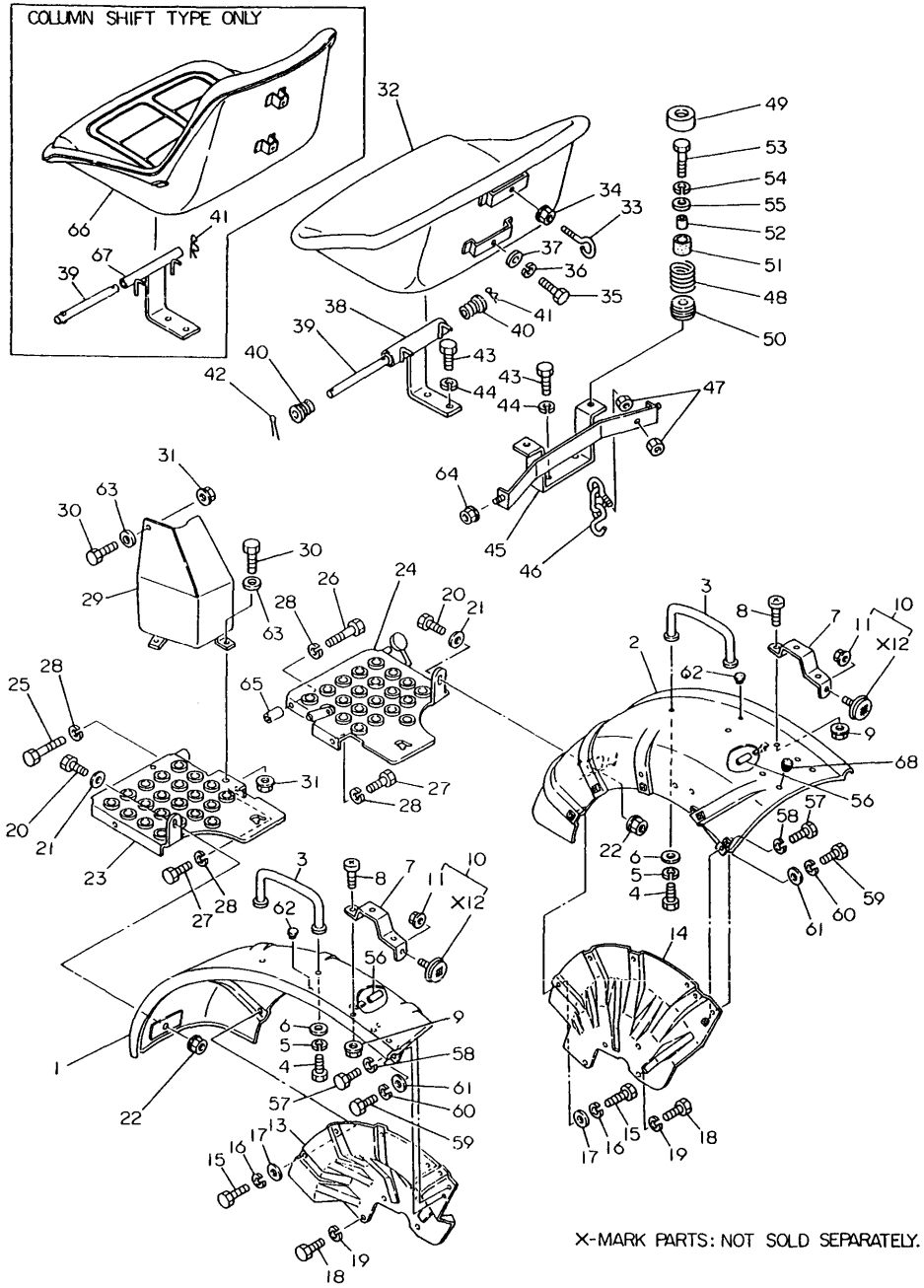

63. FENDER (U.S.A.)

(A)=YM186 (FLOOR (D)=YM186D(COLUM
(B)=YM186D(FLOOR (E)=
(C)=YM186 (COLUM (F)=

REF.	LEV.	PARTS NO.	DESCRIPTION	Q'TY (A)	(B)	(C)	(D)	(E)	(F)	I	R
26	1	26116-080452	BOLT M 8X 45 PLATED	1	1	1	1				
26-1	1	26013-080452	BOLT M 8X 45	1	1	1	1			N	
	(A=*)	(B=*)	(C=*) (D=*)								
26-2	1	26106-080452	BOLT M 8X 45 PLATED	1	1	1	1			N	
	(A=T/# 00909)	(B=T/# 02372)	(C=T/# 02991) (D=T/# 42957)								
27	1	26116-080162	BOLT M 8X 16 PLATED	2	2	2	2				
27-1	1	26013-080162	BOLT W/WASHER M8X16	2	2	2	2			N	
	(A=*)	(B=*)	(C=*) (D=*)								
27-2	1	26106-080162	BOLT M 8X 16 PLATED	2	2	2	2			N	
	(A=T/# 00909)	(B=T/# 02372)	(C=T/# 20991) (D=T/# 42957)								
28	1	22217-080000	SPRING WASHER 8	4	4	4	4				
28-1	1	22217-080000	SPRING WASHER 8	1	1	1	1			K	
	(A=*)	(B=*)	(C=*) (D=*)								
29	1	194446-62550-X	PROTECTOR	1	1	1	1				
30	1	26116-080162	BOLT M 8X 16 PLATED	3	3	3	3				
30-1	1	26011-080162	BOLT M 8X 16	3	3	3	3			N	
	(A=*)	(B=*)	(C=*) (D=*)								
30-2	1	26106-080162	BOLT M 8X 16 PLATED	3	3	3	3			N	
	(A=T/# 00909)	(B=T/# 02372)	(C=T/# 20991) (D=T/# 42957)								
31	1	194990-22140	NUT W/WASHER 8	3	3	3	3				
32	1	194275-63111-X	SEAT, OPERATOR	1	1						
32-1	1	194448-63110	SEAT, OPERATOR	1	1					N	
	(A=T/# 00831)	(B=T/# 02189)									
33	1	194275-63120	BOLT	1	1	1	1				
34	1	194990-22130	NUT W/WASHER 6	1	1	1	1				
35	1	26116-060202	BOLT M6X20	1	1	1	1				
35-1	1	26014-060202	BOLT M 6X 20	1	1	1	1			N	
	(A=*)	(B=*)	(C=*) (D=*)								
36	1	22217-060000	SPRING WASHER 6	1	1	1	1			Z	
	(A=*)	(B=*)	(C=*) (D=*)								
37	1	22137-060000	WASHER 6, POLISHED	1	1	1	1			Z	
	(A=*)	(B=*)	(C=*) (D=*)								
38	1	194446-63210-X	BRACKET, SEAT	1	1						
39	1	194140-63221	PIN, HINGE	1	1	1	1				
40	1	194140-63270	DAMPER (RUBBER)	2	2						
41	1	22360-080000	SNAP PIN 8	1	1						
42	1	22417-200200	COTTER PIN 2.0X20	1	1						
43	1	26116-080162	BOLT M 8X 16 PLATED	4	4	4	4				
43-1	1	26013-080162	BOLT W/WASHER M8X16	4	4	4	4			N	
	(A=*)	(B=*)	(C=*) (D=*)								
43-2	1	26106-080162	BOLT M 8X 16 PLATED	4	4	4	4			N	
	(A=T/# 00909)	(B=T/# 02372)	(C=T/# 20991) (D=T/# 42957)								
44	1	22217-080000	SPRING WASHER 8	4	4	4	4			Z	
	(A=*)	(B=*)	(C=*) (D=*)								
45	1	194446-63230-X	PLATE, CUSHION	1	1	1	1				
45-1	1	194500-63230	PLATE, CUSHION			1	1			S	
			(C=FROM 1ST) (D=FROM 1ST)								
46	1	194446-63910	CHAIN	1	1	1	1				
47	1	26716-060002	NUT M 6	2	2	2	2				
48	1	194281-63240	SPRING	2	2	2	2				
49	1	194322-63280	RETAINER	2	2	2	2				

N:Old $\overset{\text{Yes}}{\underset{\text{No}}{\leftrightarrow}}$ New, Q:Old $\overset{\text{No}}{\underset{\text{Yes}}{\leftrightarrow}}$ New, R:Old $\overset{\text{Yes}}{\underset{\text{Yes}}{\leftrightarrow}}$ New, S:Old $\overset{\text{No}}{\underset{\text{No}}{\leftrightarrow}}$ New, W:Add, Z:Discontinued, F:Interchangeable by set, K:Q'ty Change

++ CONTINUE ++

(C)Copy Rights YANMAR CO.,LTD.

Fig.63. FENDER (U.S.A.)

Fig. 63 FENDER (U.S.A.)

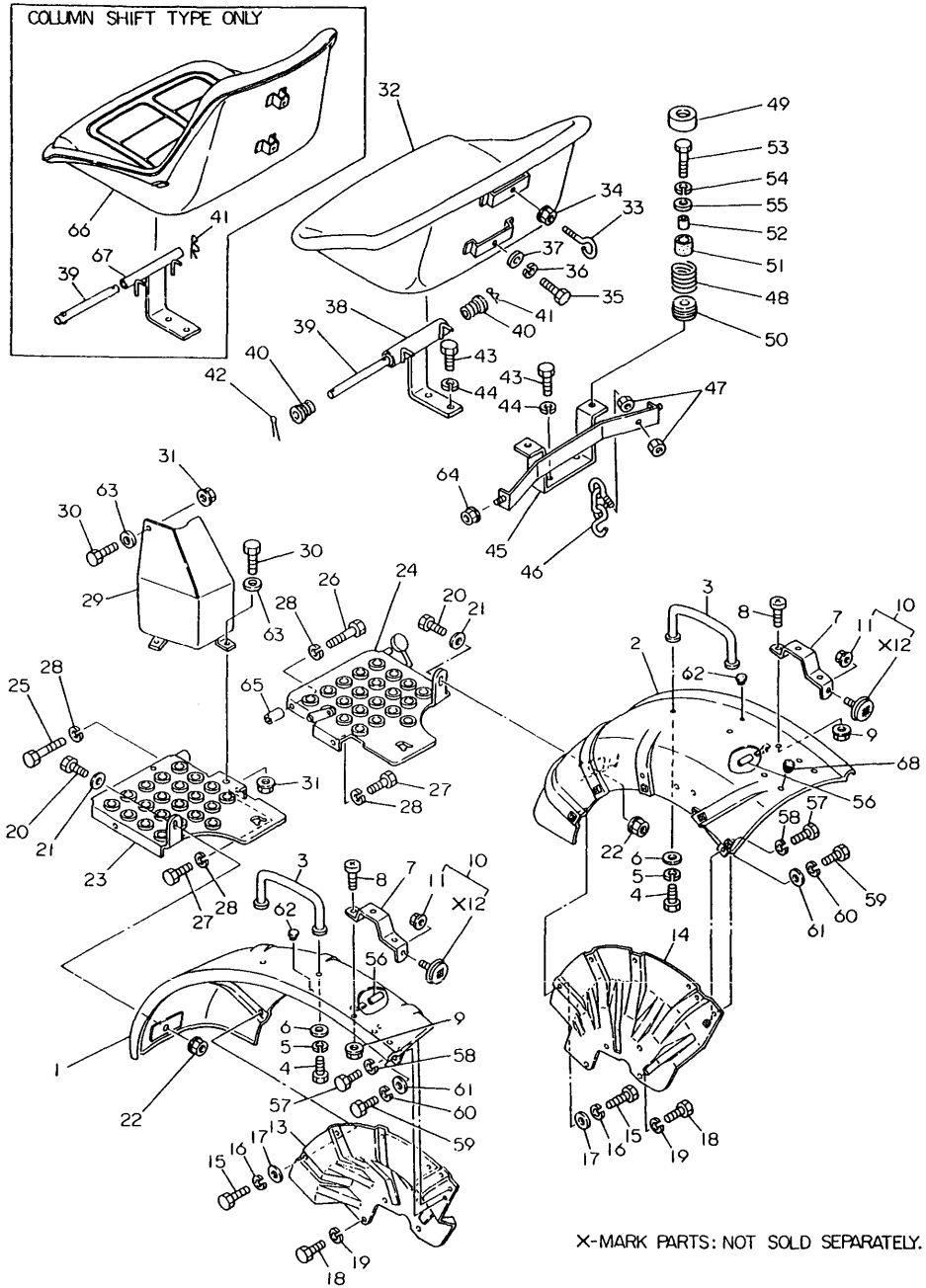

0CT10-G22801

63. FENDER (U.S.A.)

(A)=YM186 (FLOOR (D)=YM186D(COLUM
(B)=YM186D(FLOOR (E)=
(C)=YM186 (COLUM (F)=

REF.	LEV.	PARTS NO.	DESCRIPTION	Q'TY (A)	(B)	(C)	(D)	(E)	(F)	I	R
50	1	194322-63250	HOLDER	2	2	2	2				
51	1	194151-63240	RUBBER, CUSHION	2	2	2	2				
52	1	194151-63250	COLLAR	2	2	2	2				
53	1	26116-080602	BOLT M 8X 60 PLATED	2	2	2	2				
53-1	1	26116-080552	BOLT M 8X 55 PLATED	2	2	2	2				N
	(A=T/# 00860)	(B=T/# 02189)	(C=T/# 20967) (D=T/# 42882)								
53-2	1	26106-080552	BOLT M 8X 55 PLATED	2	2	2	2				N
	(A=T/# 00909)	(B=T/# 02372)	(C=T/# 20991) (D=T/# 42957)								
54	1	22217-080000	SPRING WASHER 8	2	2	2	2				
55	1	22137-080000	WASHER 8, POLISHED	2	2	2	2				
56	1	23061-070025	PIPE 7X 25	6	6						W
56-1	1	23061-070035	PIPE 7X 35	4	4	4	4				N
	(A=T/# 00200)	(B=T/# 00487)									
57	1	26116-080202	BOLT M 8X 20 PLATED	4	4	4	4				W
	(A=*)	(B=*)	(C=*) (D=*)								
57-1	1	26013-080202	BOLT W/WASHER M8X20	4	4	4	4				N
	(A=*)	(B=*)	(C=*) (D=*)								
57-2	1	26106-080202	BOLT M 8X 20 PLATED	4	4	4	4				N
	(A=T/# 00909)	(B=T/# 02372)	(C=T/# 20991) (D=T/# 42957)								
58	1	22217-080000	SPRING WASHER 8	4	4	4	4				W
	(A=*)	(B=*)	(C=*) (D=*)								
58-1	1	22217-080000	SPRING WASHER 8	4	4	4	4				Z
	(A=*)	(B=*)	(C=*) (D=*)								
59	1	26116-100202	BOLT M10X 20 PLATED	2	2	2	2				W
	(A=*)	(B=*)	(C=*) (D=*)								
59-1	1	26013-100202	BOLT W/WASHER M10X20	2	2	2	2				N
	(A=*)	(B=*)	(C=*) (D=*)								
59-2	1	26106-100162	BOLT M10X 16 PLATED	2	2	2	2				N
	(A=T/# 00909)	(B=T/# 02372)	(C=T/# 20991) (D=T/# 42957)								
60	1	22217-100000	SPRING WASHER 10	2	2	2	2				W
	(A=*)	(B=*)	(C=*) (D=*)								
60-1	1	22217-100000	SPRING WASHER 10	2	2	2	2				Z
	(A=*)	(B=*)	(C=*) (D=*)								
61	1	22137-100000	WASHER 10,POLISHED	2	2	2	2				W
	(A=*)	(B=*)	(C=*) (D=*)								
62	1	194275-62320	CAP 12, RUBBER	2	2	2	2				W
	(A=FROM 1ST)	(B=FROM 1ST)	(C=FROM 1ST) (D=FROM 1ST)								
62-1	1	194145-64430	GROMMET 12	2	2	2	2				N
	(A=*1981.)	(B=*1981.)	(C=*1981.) (D=*1981.)								
63	1	22137-080000	WASHER 8, POLISHED	3	3	3	3				W
	(A=*)	(B=*)	(C=*) (D=*)								
63-1	1	22137-080000	WASHER 8, POLISHED	3	3	3	3				Z
	(A=*)	(B=*)	(C=*) (D=*)								
64	1	194990-22140	NUT W/WASHER 8	2	2	2	2				W
	(A=*)	(B=*)	(C=*) (D=*)								
65	1	194440-62580	COLLAR 8.6X15X27	1	1	1	1				W
	(A=FROM 1ST)	(B=FROM 1ST)	(C=FROM 1ST) (D=FROM 1ST)								
66	1	194170-63110-X	SEAT, OPERATOR			1	1				W
			(C=FROM 1ST) (D=FROM 1ST)								
66-1	1	194170-63111-X	SEAT, OPERATOR			1	1				N
			(C=T/# 20988) (D=T/# 42943)								

N:Old $\frac{\text{Yes}}{\text{No}}$ New, Q:Old $\frac{\text{No}}{\text{Yes}}$ New, R:Old $\frac{\text{Yes}}{\text{Yes}}$ New, S:Old $\frac{\text{No}}{\text{No}}$ New, W:Add, Z:Discontinued, F:Interchangeable by set, K:Q'ty Change

++ CONTINUE ++

(C)Copy Rights YANMAR CO.,LTD.

Fig.63. FENDER (U.S.A.)

Fig. 63 FENDER (U.S.A.)

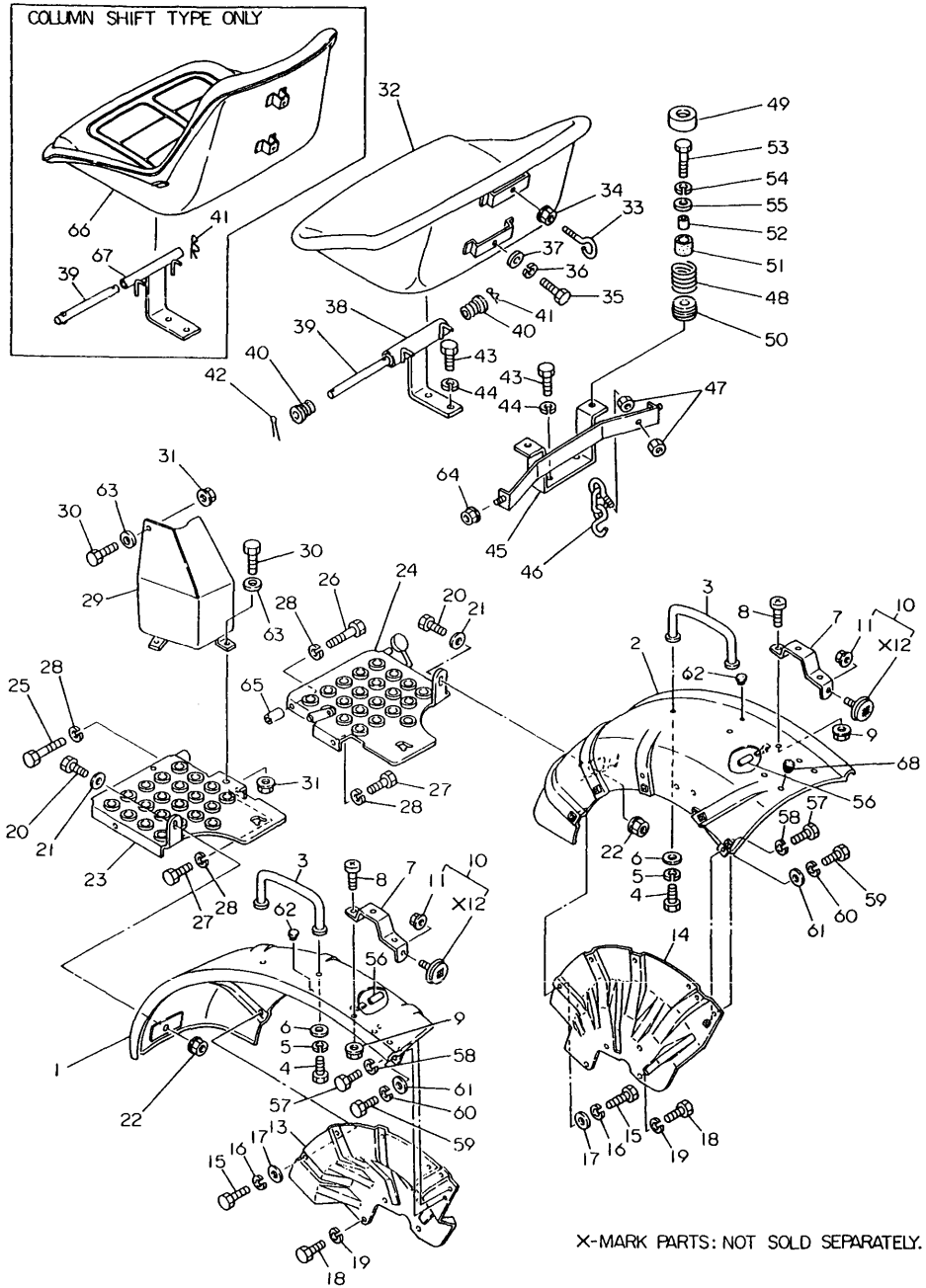

0CT10-G22801

63. FENDER (U.S.A.)

(A)=YM186 (FLOOR
(B)=YM186D(FLOOR
(C)=YM186 (COLUM
(D)=YM186D(COLUM
(E)=
(F)=

REF.	LEV.	PARTS NO.	DESCRIPTION	Q'TY (A)	(B)	(C)	(D)	(E)	(F)	I	R
67	1	194500-63210-X	BRACKET, SEAT (C=FROM 1ST) (D=FROM 1ST)			1	1			W	
68	1	1C6053-26020	CAP, RUBBER	1	1	1	1			W	
	(A=*)	(B=*)	(C=*) (D=*)								

N:Old ←Yes/No→ New, Q:Old ←No/Yes→ New, R:Old ←Yes/Yes→ New, S:Old ←No/No→ New, W:Add, Z:Discontinued, F:Interchangeable by set, K:Q'ty Change

(C)Copy Rights YANMAR CO.,LTD.

Fig.64. FENDER (FRANCE)

Fig. 64 FENDER (FRANCE)

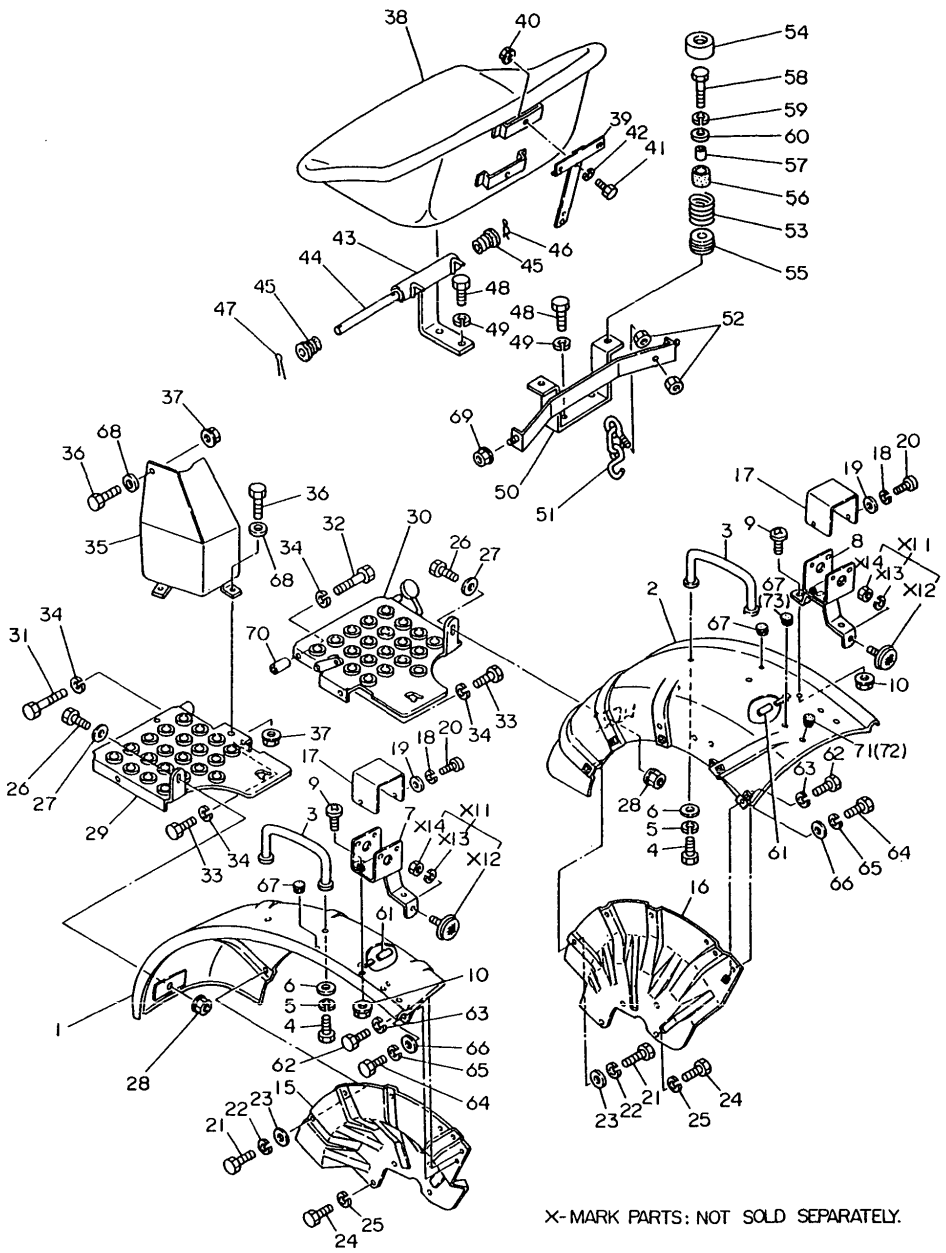

64. FENDER (FRANCE)

(A)=YM186 (FLOOR (D)=YM186D(COLUM
(B)=YM186D(FLOOR (E)=
(C)=YM186 (COLUM (F)=

REF.	LEV.	PARTS NO.	DESCRIPTION	Q'TY (A)	(B)	(C)	(D)	(E)	(F)	I	R
1	1	194446-62110-R	FENDER (L)	1	1	1	1				
2	1	194446-62120-R	FENDER (R)	1	1	1	1				
3	1	194262-62400-R	BAR, ASSIST	2	2	2	2				
4	1	26116-080162	BOLT M 8X 16 PLATED	4	4	4	4				
4-1	1	26013-080162	BOLT W/WASHER M8X16	4	4	4	4			N	
	(A=*)	(B=*)	(C=*) (D=*)								
4-2	1	26106-080162	BOLT M 8X 16 PLATED	4	4	4	4			N	
	(A=T/# 00909)	(B=T/# 02372)	(C=T/# 20991) (D=T/# 42957)								
5	1	22217-080000	SPRING WASHER 8	4	4	4	4			Z	
	(A=*)	(B=*)	(C=*) (D=*)								
6	1	22137-080000	WASHER 8, POLISHED	4	4	4	4				
7	1	194448-62250-P	STAY (L), LAMP	1	1	1	1				
7-1	1	194448-62251	STAY (L), LAMP	1	1	1	1			S	
	(A=*1982.03)	(B=*1982.03)	(C=*1982.03) (D=*1982.03)								
8	1	194448-62260-P	STAY (R), LAMP	1	1	1	1				
8-1	1	194448-62261	STAY (R), LAMP	1	1	1	1			S	
	(A=*1982.03)	(B=*1982.03)	(C=*1982.03) (D=*1982.03)								
9	1	26587-080162	SCREW M 8X 16	4	4	4	4				
10	1	194990-22140	NUT W/WASHER 8	4	4	4	4				
11	1	(06.141.000)	REFLECTOR ASSY	2	2	2	2				1
12	2	(----------)	REFLECTOR	2	2	2	2				1
13	2	22217-050000	SPRING WASHER 5	2	2	2	2				1
14	2	26716-050002	NUT M 5	2	2	2	2				1
15	1	194440-62150-R	BRACKET, FENDER	1	1	1	1				
16	1	194440-62160-R	BRACKET, FENDER	1	1	1	1				
17	1	194240-62260-R	HOOD, TURN SIGNAL	2	2	2	2				
18	1	22217-060000	SPRING WASHER 6	4	4	4	4				
19	1	22137-060000	WASHER 6, POLISHED	4	4	4	4				
20	1	26557-060122	SCREW M 6X 12,PAN HD	4	4	4	4				
21	1	26116-080162	BOLT M 8X 16 PLATED	8	8	8	8				
21-1	1	26013-080162	BOLT W/WASHER M8X16	8	8	8	8			N	
	(A=*)	(B=*)	(C=*) (D=*)								
21-2	1	26106-080162	BOLT M 8X 16 PLATED	8	8	8	8			N	
	(A=T/# 00909)	(B=T/# 02372)	(C=T/# 20991) (D=T/# 42957)								
22	1	22217-080000	SPRING WASHER 8	8	8	8	8			Z	
	(A=*)	(B=*)	(C=*) (D=*)								
23	1	22137-080000	WASHER 8, POLISHED	8	8	8	8				
24	1	26116-100162	BOLT M10X 16 PLATED	6	6	6	6				
24-1	1	26013-100162	BOLT M10X 16	6	6	6	6			N	
	(A=*)	(B=*)	(C=*) (D=*)								
24-2	1	26106-100162	BOLT M10X 16 PLATED	6	6	6	6			N	
	(A=T/# 00909)	(B=T/# 02372)	(C=T/# 20991) (D=T/# 42957)								
25	1	22217-100000	SPRING WASHER 10	6	6	6	6			Z	
	(A=*)	(B=*)	(C=*) (D=*)								
26	1	26116-080162	BOLT M 8X 16 PLATED	2	2	2	2				
26-1	1	26011-080162	BOLT M 8X 16	2	2	2	2			N	
	(A=*)	(B=*)	(C=*) (D=*)								
26-2	1	26106-080162	BOLT M 8X 16 PLATED	2	2	2	2			N	
	(A=T/# 00909)	(B=T/# 02372)	(C=T/# 20991) (D=T/# 42957)								
27	1	22137-080000	WASHER 8, POLISHED	2	2	2	2			Z	
	(A=*)	(B=*)	(C=*) (D=*)								

N:Old $\xleftarrow[\text{No}]{\text{Yes}}$ New, Q:Old $\xleftarrow[\text{Yes}]{\text{No}}$ New, R:Old $\xleftarrow[\text{Yes}]{\text{Yes}}$ New, S:Old $\xleftarrow[\text{No}]{\text{No}}$ New, W:Add, Z:Discontinued, F:Interchangeable by set, K:Q'ty Change

++ CONTINUE ++

(C)Copy Rights YANMAR CO.,LTD.

Fig.64. FENDER (FRANCE)

Fig. 64 FENDER (FRANCE)

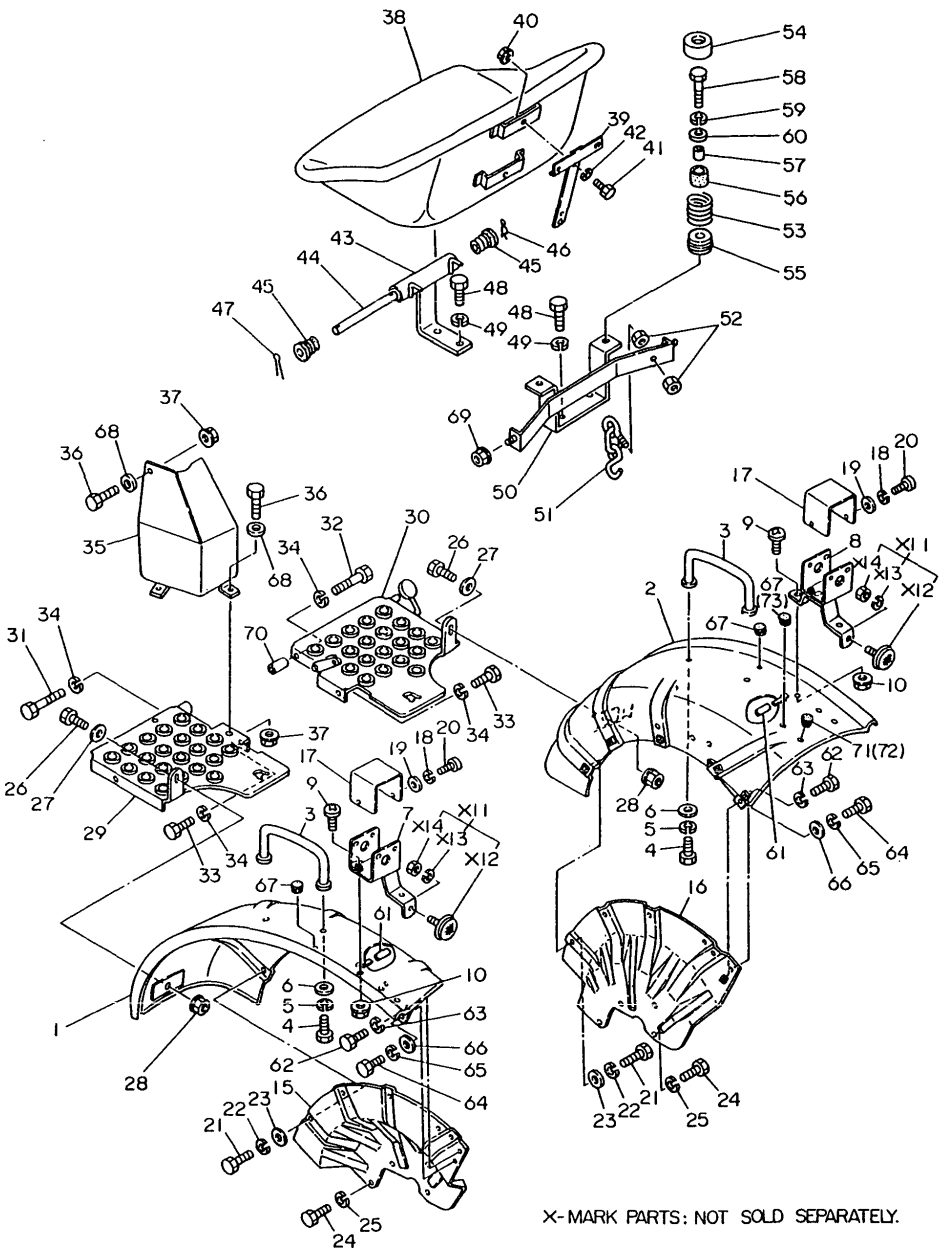

64. FENDER (FRANCE)

(A)=YM186 (FLOOR (D)=YM186D(COLUM
(B)=YM186D(FLOOR (E)=
(C)=YM186 (COLUM (F)=

REF.	LEV.	PARTS NO.	DESCRIPTION	Q'TY (A)	(B)	(C)	(D)	(E)	(F)	I	R
28	1	194990-22140	NUT W/WASHER 8	2	2	2	2				
29	1	194446-62510-X	STEP (L)	1	1	1	1				
30	1	194446-62520-X	STEP (R)	1	1	1	1				
31	1	26116-080502	BOLT M 8X 50 PLATED	1	1	1	1				
32	1	26116-080452	BOLT M 8X 45 PLATED	1	1	1	1				
32-1	1	26013-080452	BOLT M 8X 45	1	1	1	1			N	
	(A=*)	(B=*)	(C=*) (D=*)								
32-2	1	26106-080452	BOLT M 8X 45 PLATED	1	1	1	1			N	
	(A=T/# 00909)	(B=T/# 02372)	(C=T/# 20991) (D=T/# 42957)								
33	1	26116-080162	BOLT M 8X 16 PLATED	2	2	2	2				
33-1	1	26013-080162	BOLT W/WASHER M8X16	2	2	2	2			N	
	(A=*)	(B=*)	(C=*) (D=*)								
33-2	1	26106-080162	BOLT M 8X 16 PLATED	2	2	2	2			N	
	(A=T/# 00909)	(B=T/# 02372)	(C=T/# 20991) (D=T/# 42957)								
34	1	22217-080000	SPRING WASHER 8	4	4	4	4				
34-1	1	22217-080000	SPRING WASHER 8	1	1	1	1			K	
	(A=*1982.12)	(B=*1982.12)	(C=*1982.12) (D=*1982.12)								
35	1	194446-62550-X	PROTECTOR	1	1	1	1				
36	1	26116-080162	BOLT M 8X 16 PLATED	3	3	3	3				
36-1	1	26011-080162	BOLT M 8X 16	3	3	3	3			N	
	(A=*)	(B=*)	(C=*) (D=*)								
36-2	1	26106-080162	BOLT M 8X 16 PLATED	3	3	3	3			N	
	(A=T/# 00909)	(B=T/# 02372)	(C=T/# 20991) (D=T/# 42957)								
37	1	194990-22140	NUT W/WASHER 8	3	3	3	3				
38	1	194275-63111-X	SEAT, OPERATOR	1	1	1	1			Z	
	(A=T/# 00826)	(B=T/# 02058)	(C=T/# 20967) (D=T/# 42802)								
39	1	194448-63120-X	STAY, NUMBER PLATE	1	1	1	1			Z	
	(A=T/# 00826)	(B=T/# 02058)	(C=T/# 20967) (D=T/# 42802)								
40	1	194990-22130	NUT W/WASHER 6	2	2	2	2			Z	
	(A=T/# 00826)	(B=T/# 02058)	(C=T/# 20967) (D=T/# 42802)								
41	1	26116-060162	BOLT M 6X 16 PLATED	2	2	2	2			Z	
	(A=T/# 00826)	(B=T/# 02058)	(C=T/# 20967) (D=T/# 42802)								
42	1	22217-060000	SPRING WASHER 6	2	2	2	2			Z	
	(A=T/# 00826)	(B=T/# 02058)	(C=T/# 20967) (D=T/# 42802)								
43	1	194446-63210-X	BRACKET, SEAT	1	1	1	1			Z	
	(A=T/# 00826)	(B=T/# 02058)	(C=T/# 20967) (D=T/# 42802)								
44	1	194140-63221	PIN, HINGE	1	1	1	1			Z	
	(A=T/# 00826)	(B=T/# 02058)	(C=T/# 20967) (D=T/# 42802)								
45	1	194140-63270	DAMPER (RUBBER)	2	2	2	2			Z	
	(A=T/# 00826)	(B=T/# 02058)	(C=T/# 20967) (D=T/# 42802)								
46	1	22360-080000	SNAP PIN 8	1	1	1	1			Z	
	(A=T/# 00826)	(B=T/# 02058)	(C=T/# 20967) (D=T/# 42802)								
47	1	22417-200200	COTTER PIN 2.0X20	1	1	1	1			Z	
	(A=T/# 00826)	(B=T/# 02058)	(C=T/# 20967) (D=T/# 42802)								
48	1	26116-080162	BOLT M 8X 16 PLATED	4	4	4	4				
48-1	1	26013-080162	BOLT W/WASHER M8X16	4	4	4	4			N	
	(A=*)	(B=*)	(C=*) (D=*)								
48-2	1	26106-080162	BOLT M 8X 16 PLATED	4	4	4	4			N	
	(A=T/# 00909)	(B=T/# 02372)	(C=T/# 20991) (D=T/# 42957)								
49	1	22217-080000	SPRING WASHER 8	4	4	4	4			Z	
	(A=*)	(B=*)	(C=*) (D=*)								

N:Old $\overset{\text{Yes}}{\underset{\text{No}}{\leftrightarrow}}$ New, Q:Old $\overset{\text{No}}{\underset{\text{Yes}}{\leftrightarrow}}$ New, R:Old $\overset{\text{Yes}}{\underset{\text{Yes}}{\leftrightarrow}}$ New, S:Old $\overset{\text{No}}{\underset{\text{No}}{\leftrightarrow}}$ New, W:Add, Z:Discontinued, F:Interchangeable by set, K:Q'ty Change

++ CONTINUE ++

(C)Copy Rights YANMAR CO.,LTD.

Fig.64. FENDER (FRANCE)

Fig. 64 FENDER (FRANCE)

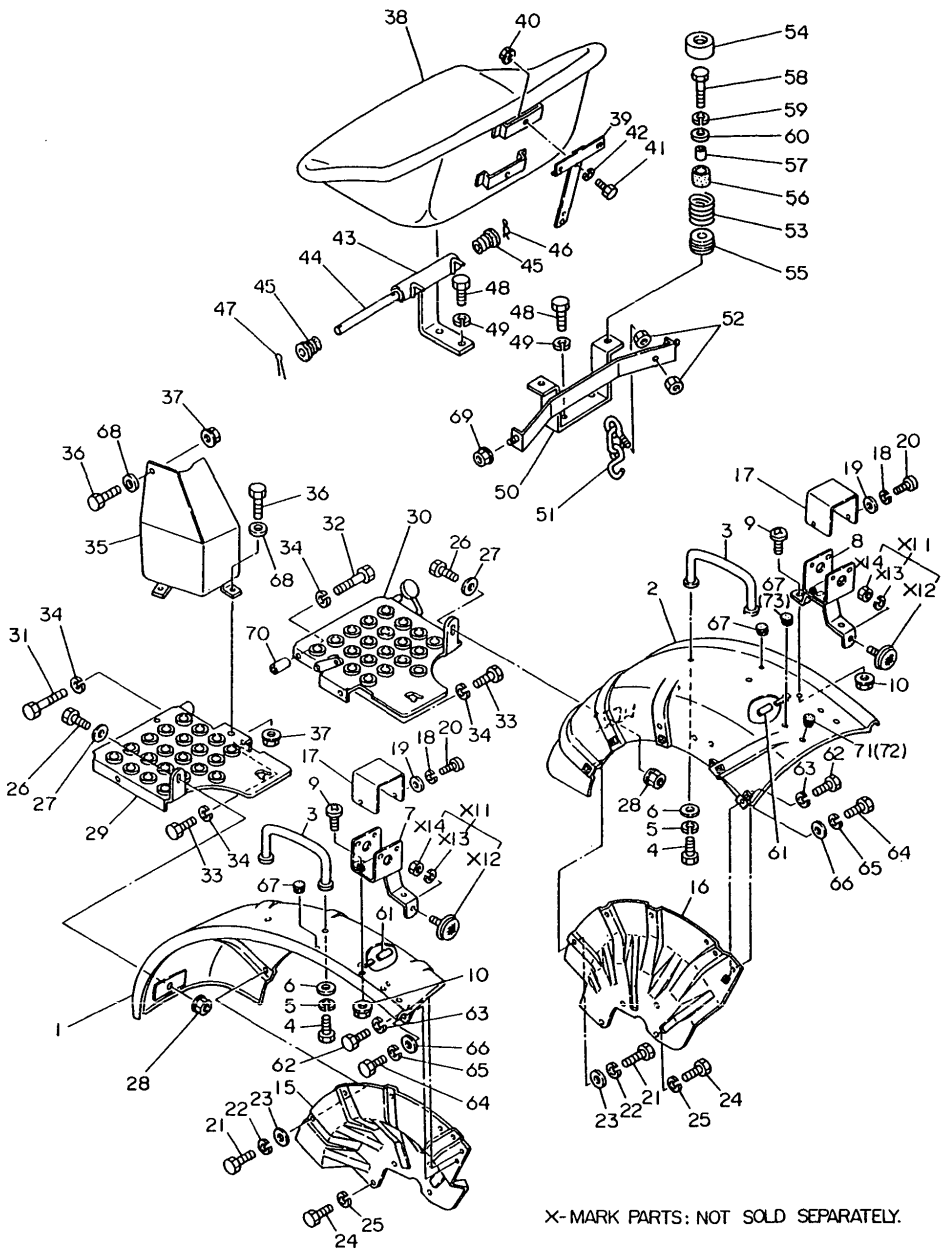

64. FENDER (FRANCE)

(A)=YM186 (FLOOR (D)=YM186D(COLUM
(B)=YM186D(FLOOR (E)=
(C)=YM186 (COLUM (F)=

REF.	LEV.	PARTS NO.	DESCRIPTION	Q'TY (A)	(B)	(C)	(D)	(E)	(F)	I	R
50	1	194446-63230-X	PLATE, CUSHION	1	1	1	1			Z	
	(A=T/# 00826)	(B=T/# 02058)	(C=T/# 20967) (D=T/# 42802)								
51	1	194446-63910	CHAIN	1	1	1	1				
52	1	26716-060002	NUT M 6	2	2	2	2				
53	1	194281-63240	SPRING	2	2	2	2			Z	
	(A=T/# 00826)	(B=T/# 02058)	(C=T/# 20967) (D=T/# 42802)								
54	1	194322-63280	RETAINER	2	2	2	2			Z	
	(A=T/# 00826)	(B=T/# 02058)	(C=T/# 20967) (D=T/# 42802)								
55	1	194322-63250	HOLDER	2	2	2	2			Z	
	(A=T/# 00826)	(B=T/# 02058)	(C=T/# 20967) (D=T/# 42802)								
56	1	194151-63240	RUBBER, CUSHION	2	2	2	2			Z	
	(A=T/# 00826)	(B=T/# 02058)	(C=T/# 20967) (D=T/# 42802)								
57	1	194151-63250	COLLAR	2	2	2	2			Z	
	(A=T/# 00826)	(B=T/# 02058)	(C=T/# 20967) (D=T/# 42802)								
58	1	26116-080602	BOLT M 8X 60 PLATED	2	2	2	2			Z	
	(A=T/# 00826)	(B=T/# 02058)	(C=T/# 20967) (D=T/# 42802)								
59	1	22217-080000	SPRING WASHER 8	2	2	2	2			Z	
	(A=T/# 00826)	(B=T/# 02058)	(C=T/# 20967) (D=T/# 42802)								
60	1	22137-080000	WASHER 8, POLISHED	2	2	2	2			Z	
	(A=T/# 00826)	(B=T/# 02058)	(C=T/# 20967) (D=T/# 42802)								
61	1	23061-070035	PIPE 7X 35	6	6					W	
	(A=T/# 00200)	(B=T/# 00487)									
61-1	1	23061-070035	PIPE 7X 35	4	4	4	4			K	
	(A=*)	(B=*)									
62	1	26116-080202	BOLT M 8X 20 PLATED	4	4	4	4				
62-1	1	26013-080202	BOLT W/WASHER M8X20	4	4	4	4			N	
	(A=*)	(B=*)	(C=*) (D=*)								
62-2	1	26106-080202	BOLT M 8X 20 PLATED	4	4	4	4			N	
	(A=T/# 00909)	(B=T/# 02372)	(C=T/# 20991) (D=T/# 42957)								
63	1	22217-080000	SPRING WASHER 8	4	4	4	4			Z	
	(A=*)	(B=*)	(C=*) (D=*)								
64	1	26116-100202	BOLT M10X 20 PLATED	2	2	2	2				
64-1	1	26013-100202	BOLT W/WASHER M10X20	2	2	2	2			N	
	(A=*)	(B=*)	(C=*) (D=*)								
64-2	1	26106-100162	BOLT M10X 16 PLATED	2	2	2	2			N	
	(A=T/# 00909)	(B=T/# 20372)	(C=T/# 20991) (D=T/# 42957)								
65	1	22217-100000	SPRING WASHER 10	2	2	2	2			Z	
	(A=*)	(B=*)	(C=*) (D=*)								
66	1	22137-100000	WASHER 10,POLISHED	2	2	2	2				
67	1	194275-62320	CAP 12, RUBBER	3	3	3	3				
67-1	1	194145-64430	GROMMET 12	3	3	3	3			N	
	(A=*1981.)	(B=*1981.)	(C=*1981.) (D=*1981.)								
67-2	1	194145-64430	GROMMET 12	2	2	2	2			K	
	(A=*)	(B=*)	(C=*) (D=*)								
68	1	22137-080000	WASHER 8, POLISHED	3	3	3	3			Z	
	(A=*)	(B=*)	(C=*) (D=*)								
69	1	194990-22140	NUT W/WASHER 8	2	2	2	2				
70	1	194440-62580	COLLAR 8.6X15X27	1	1	1	1				
71	1	1C6053-26030	PLUG	1	1	1	1			Z	
	(A=*)	(B=*)	(C=*) (D=*)								
72	1	1C6053-26020	CAP, RUBBER	1	1	1	1			W	

N:Old $\xleftarrow[\text{No}]{\text{Yes}}$ New, Q:Old $\xleftarrow[\text{Yes}]{\text{No}}$ New, R:Old $\xleftarrow[\text{Yes}]{\text{Yes}}$ New, S:Old $\xleftarrow[\text{No}]{\text{No}}$ New, W:Add, Z:Discontinued, F:Interchangeable by set, K:Q'ty Change

++ CONTINUE ++

(C)Copy Rights YANMAR CO.,LTD.

Fig.64. FENDER (FRANCE)

Fig. 64 FENDER (FRANCE)

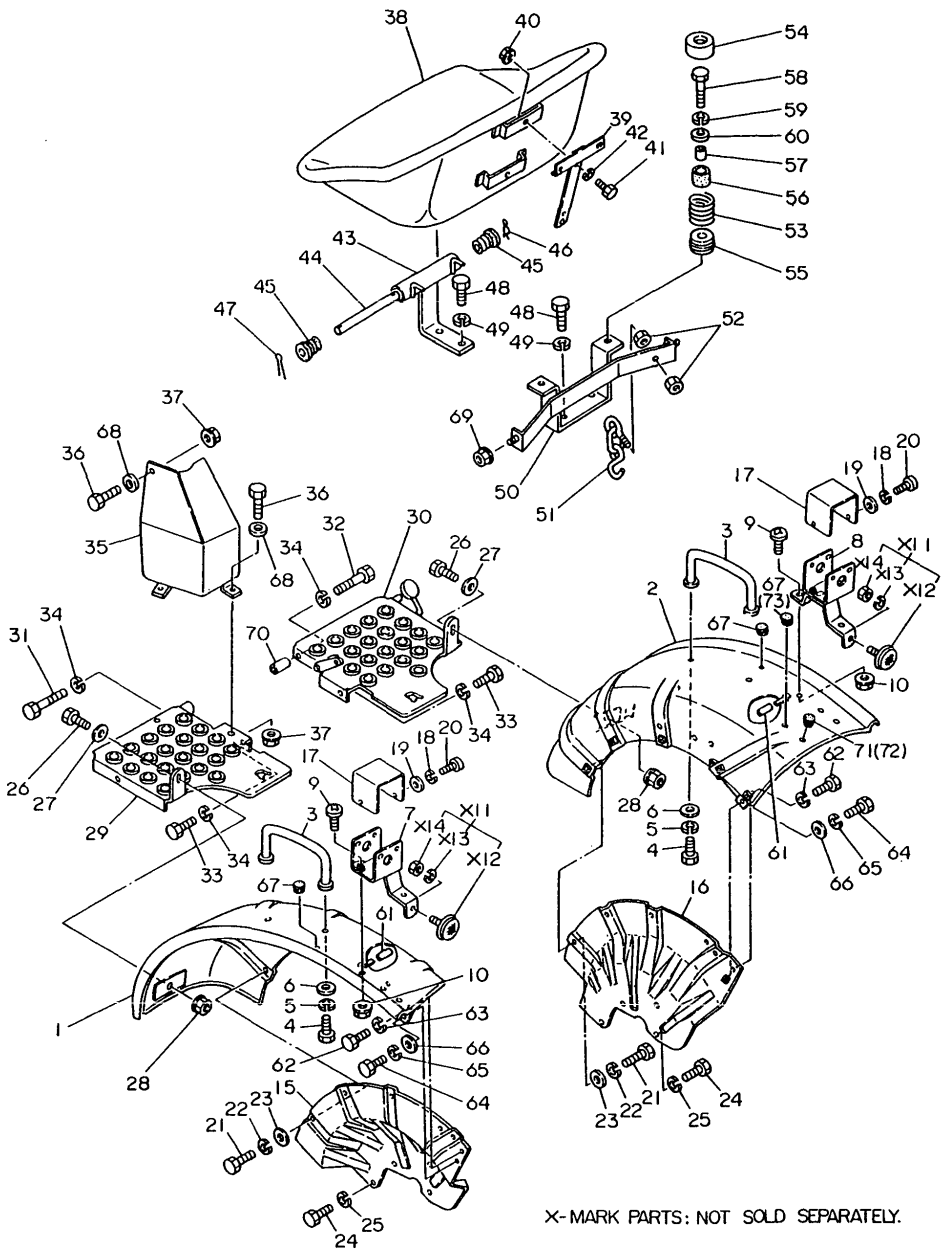

64. FENDER (FRANCE)

(A)=YM186 (FLOOR
(B)=YM186D(FLOOR
(C)=YM186 (COLUM
(D)=YM186D(COLUM
(E)=
(F)=

REF.	LEV.	PARTS NO.	DESCRIPTION	Q'TY (A)	(B)	(C)	(D)	(E)	(F)	I	R
	(A=*)	(B=*)	(C=*) (D=*)								
73	1	194275-62320	CAP 12, RUBBER	1	1	1	1			W	
	(A=FROM 1ST)	(B=FROM 1ST)	(C=FROM 1ST) (D=FROM 1ST)								

N:Old ←Yes/No→ New, Q:Old ←No/Yes→ New, R:Old ←Yes/Yes→ New, S:Old ←No/No→ New, W:Add, Z:Discontinued, F:Interchangeable by set, K:Q'ty Change

(C)Copy Rights YANMAR CO.,LTD.

Fig.65. LABELS (FLOOR SHIFT:U.S.A.)

Fig. 65 LABELS [English] (Floor Shift type:U.S.A.)

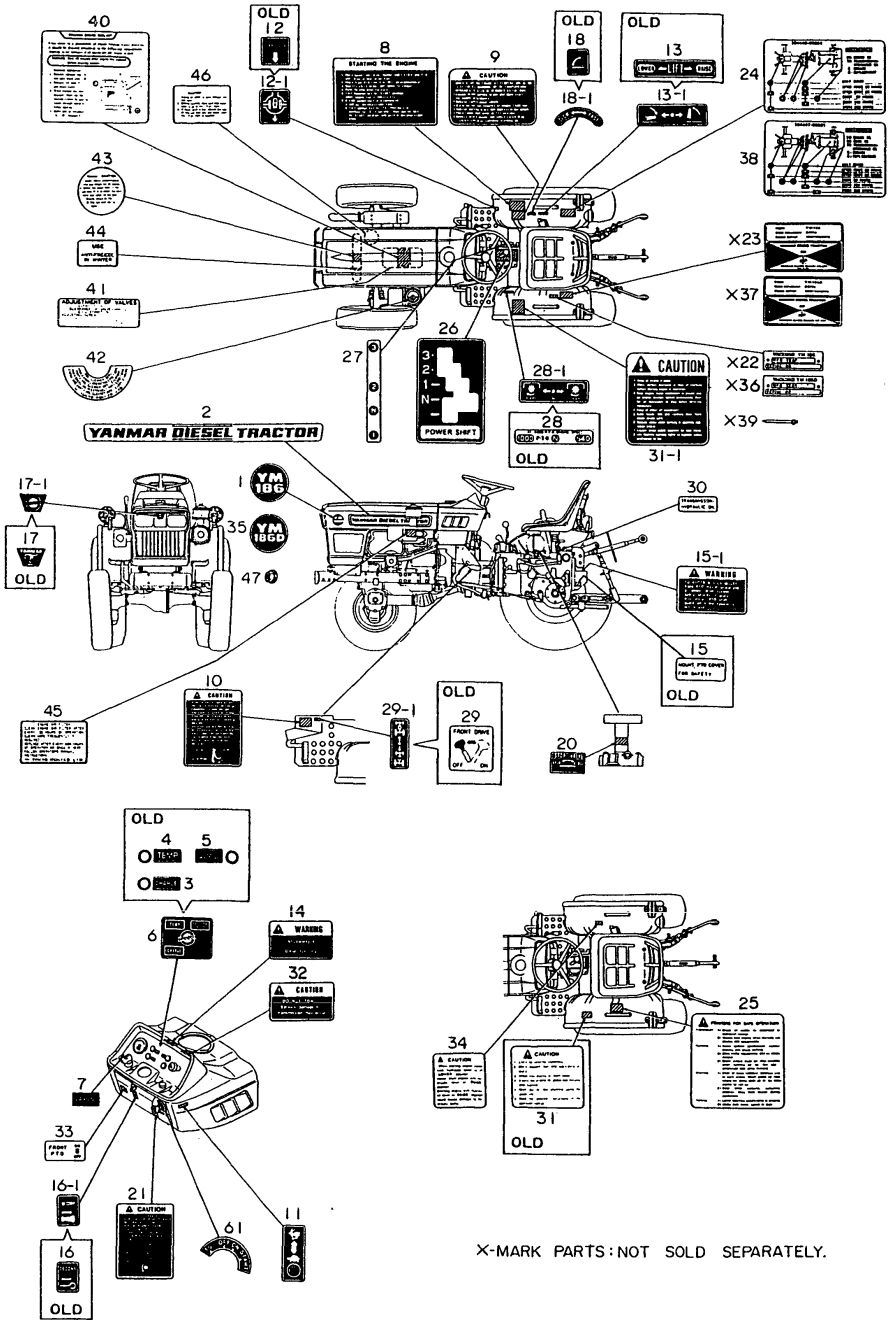

65. LABELS (FLOOR SHIFT:U.S.A.)

(A)=YM186 (FLOOR (D)=YM186D(COLUM
(B)=YM186D(FLOOR (E)=
(C)=YM186 (COLUM (F)=

REF.	LEV.	PARTS NO.	DESCRIPTION	Q'TY (A)	(B)	(C)	(D)	(E)	(F)	I	R
1	1	194446-64720	LABEL, SIDE	2							
1-1	1	194446-64721	LABEL, SIDE	2						N	
	(A=*1981.)										
1-2	1	194446-64722	LABEL, SIDE	2						N	
	(A=*1981.)										
2	1	194446-64750	LABEL, MODEL	2							
2-1	1	194446-64751	LABEL, MODEL	2	2					N	
	(A=*1981.)	(B=*1981.)									
2-2	1	194446-64752	LABEL, SIDE	2	2					N	
	(A=*1981.)	(B=*1981.)									
3	1	194446-65310	LABEL, PILOT LAMP	1	1					Z	
	(A=T/# 00860)	(B=T/# 02184)									
4	1	194446-65320	LABEL, PILOT LAMP	1	1					Z	
	(A=T/# 00860)	(B=T/# 02184)									
5	1	194446-65330	LABEL, PILOT LAMP	1	1					Z	
	(A=T/# 00860)	(B=T/# 02184)									
6	1	194446-65300	LABEL, PILOT LAMP	1	1					W	
	(A=T/# 00860)	(B=T/# 02184)									
7	1	194446-65340	LABEL, WORKING	1	1						
8	1	194446-65350	LABEL, ENG. STARTING	1	1						
8-1	1	194446-65351	LABEL, ENG. STARTING	1	1					N	
	(A=*1981.)	(B=*1981.)									
8-2	1	194446-65352	LABEL, ENG. STARTING	1	1					R	
	(A=*1982.06)	(B=*1982.06)									
9	1	194446-65360	LABEL, COLD STARTING	1	1						
9-1	1	194446-65361	LABEL, COLD STARTING	1	1					N	
	(A=*1981.)	(B=*1981.)									
10	1	194446-65460	LABEL,CLUTCH CAUTION	1	1						
10-1	1	194446-65461	LABEL,CLUTCH CAUTION	1	1					N	
	(A=*)	(B=*)									
11	1	194240-65431	LABEL,THROTTLE LEVER	1	1						
11-1	1	194240-65432	LABEL,THROTTLE LEVER	1	1					N	
	(A=*1981.)	(B=*1981.)									
12	1	194240-65440	LABEL, DIFF. LOCK	1	1						
12-1	1	194240-65441	LABEL, DIFF. LOCK	1	1					N	
	(A=*1981.)	(B=*1981.)									
13	1	194240-65510	LABEL,HYDRAULIC LIFT	1	1						
13-1	1	194240-65511	LABEL,HYDRAULIC LIFT	1	1					N	
	(A=T/# 00790)	(B=T/# 01965)									
14	1	194240-65670	LABEL, FUEL INDICAT.	1	1						
14-1	1	194240-65671	LABEL, FUEL INDICAT.	1	1					N	
	(A=T/# 00790)	(B=T/# 01965)									
15	1	194240-65710	LABEL, P.T.O. COVER	1	1						
15-1	1	194170-65620	LABEL, WARNING	1	1					N	
	(A=*1981.)	(B=*1981.)									
16	1	194340-65590	LABEL, DECOMPRESSION	1	1						
16-1	1	194370-65451	LABEL, DECOMPRESSION	1	1					S	
	(A=*)	(B=*)									
17	1	194420-65600	EMBLEM, FRONT	1	1						
17-1	1	194448-65600	EMBLEM, FRONT	1	1					S	
	(A=*1980.)	(B=*1980.)									

N:Old $\frac{\text{Yes}}{\text{No}}$ New, Q:Old $\frac{\text{No}}{\text{Yes}}$ New, R:Old $\frac{\text{Yes}}{\text{Yes}}$ New, S:Old $\frac{\text{No}}{\text{No}}$ New, W:Add, Z:Discontinued, F:Interchangeable by set, K:Q'ty Change

++ CONTINUE ++

(C)Copy Rights YANMAR CO.,LTD.

Fig.65. LABELS (FLOOR SHIFT:U.S.A.)

Fig. 65 LABELS [English] (Floor Shift type:U.S.A.)

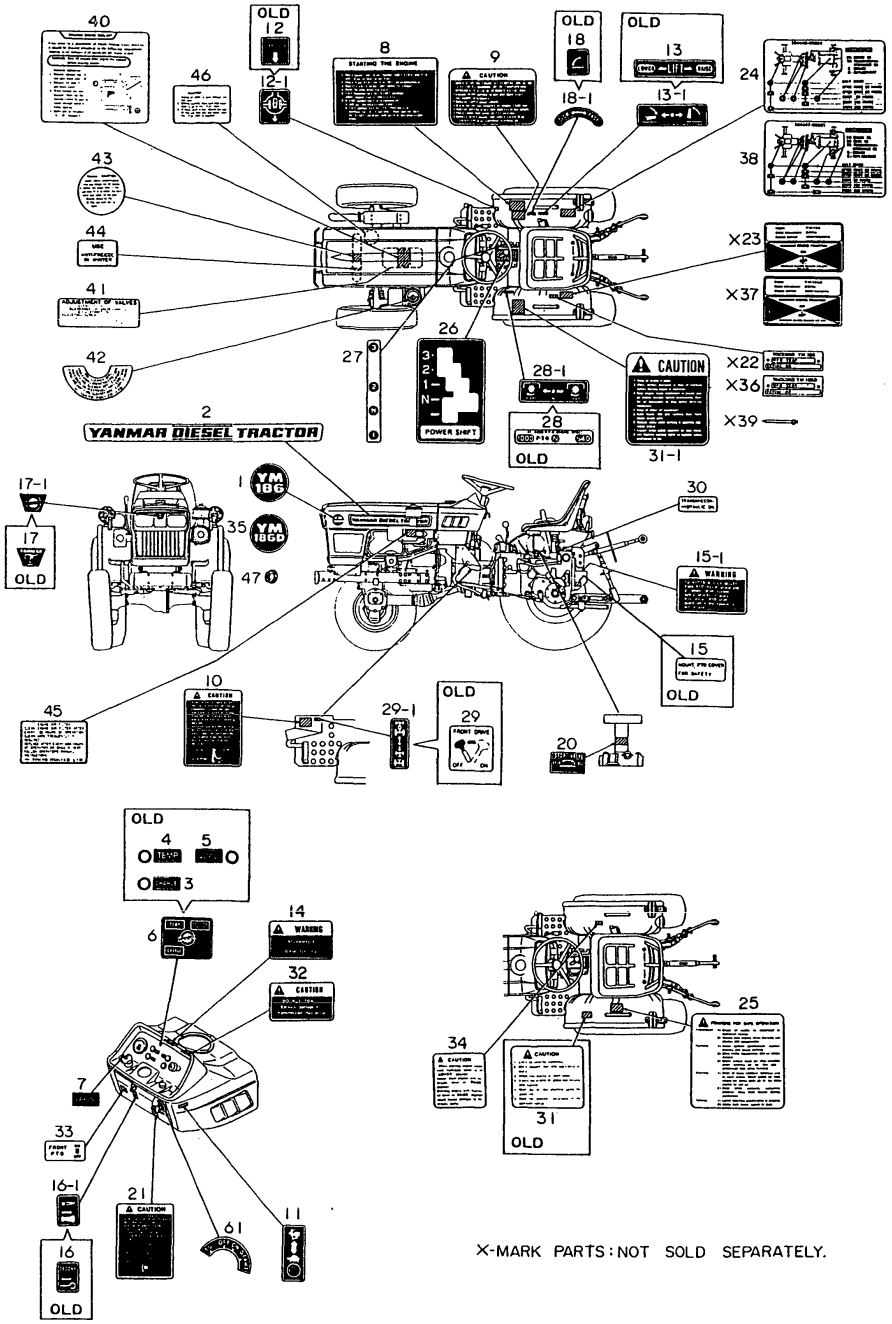

65. LABELS (FLOOR SHIFT:U.S.A.)

(A)=YM186 (FLOOR (D)=YM186D(COLUM
(B)=YM186D(FLOOR (E)=
(C)=YM186 (COLUM (F)=

REF.	LEV.	PARTS NO.	DESCRIPTION	Q'TY (A)	(B)	(C)	(D)	(E)	(F)	I	R
18	1	194340-65690	LABEL, SLOW RETURN	1	1						
18-1	1	194345-65690	LABEL, SLOW RETURN	1	1					S	
	(A=*)	(B=*)									
19	1	194310-65720	LABEL, KEY SWITCH	1	1						
20	1	194340-65750	LABEL,HYDRAULIC STOP	1	1						
20-1	1	194345-65750	LABEL,HYDRAULIC STOP	1	1					S	
	(A=*)	(B=*)									
21-1	1	194446-65471	LABEL,LEVER POSITION	1	1						
21-2	1	194446-65472	LABEL,LEVER POSITION	1	1					N	
	(A=*1980.)	(B=*1980.)									
24	1	194446-65550	LABEL, LUBRICATION	1							
24-1	1	194446-65551	LABEL, LUBRICATION	1						N	
	(A=*)										
25	1	194446-65570	LABEL, OPERATION	1	1						
26	1	194446-65580	LABEL, MAIN SHIFT	1	1						
26-1	1	194800-65350	LABEL, MAIN SHIFT	2	2					N	
	(A=T/# 00757)	(B=T/# 01756)									
27	1	194446-65590	LABEL, RANGE SHIFT	1	1						
27-1	1	194446-65591	LABEL, RANGE SHIFT	1	1					N	
	(A=*1981.)	(B=*1981.)									
28	1	194446-65610	LABEL, P.T.O. SHIFT	1	1						
28-1	1	194446-65611	LABEL, P.T.O. SHIFT	1	1					N	
	(A=*)	(B=*)									
29	1	194447-65620	LABEL, 4-DRIVE WHEEL		1						
29-1	1	194447-65621	LABEL, 4-DRIVE WHEEL		1					N	
		(B=*1981.)									
30	1	194446-65630	LABEL, GEAR OIL	1	1						
31	1	194446-65660	LABEL, CAUTION	1	1						
31-1	1	194275-65660	LABEL, CAUTION	1	1					N	
	(A=*)	(B=*)									
32	1	194446-65680	LABEL, DO NOT TOW	1	1						
32-1	1	194446-65681	LABEL, DO NOT TOW	1	1					N	
	(A=T/# 00790)	(B=T/# 01965)									
33	1	194446-65730	LABEL, FRONT P.T.O	1	1						
34	1	194446-65880	LABEL, HYD. CAUTION	1	1						
35	1	194447-64720	LABEL, SIDE		2						
35-1	1	194447-64721	LABEL, SIDE		2					N	
		(B=*1981.)									
35-2	1	194447-64722	LABEL, SIDE		2					N	
		(B=*1981.)									
38	1	194447-65550	LABEL, LUBRICATION		1						
38-1	1	194447-65551	LABEL, LUBRICATION		1					N	
		(B=*)									
40	1	121254-07150	LABEL, WATER DRAIN	1	1						
41	1	124064-07160	LABEL, VALVE ADJUST.	1	1						
42	1	121454-12480	LABEL, PRE-CLEANER	1	1						
43	1	124764-44800	LABEL, RADIATOR	1	1						
44	1	124764-44920	LABEL, ANTI-FREEZING	1	1						
45	1	121454-12520	LABEL, AIR-CLEANER	1	1						
46	1	124764-44810	LABEL, RESERVE TANK	1	1						
47	1	194990-22120	NUT W/WASHER 5	4	4					W	

N:Old $\frac{\text{Yes}}{\text{No}}$ New, Q:Old $\frac{\text{No}}{\text{Yes}}$ New, R:Old $\frac{\text{Yes}}{\text{Yes}}$ New, S:Old $\frac{\text{No}}{\text{No}}$ New, W:Add, Z:Discontinued, F:Interchangeable by set, K:Q'ty Change

++ CONTINUE ++

(C)Copy Rights YANMAR CO.,LTD.

Fig.65. LABELS (FLOOR SHIFT:U.S.A.)

Fig. 65 LABELS [English] (Floor Shift type:U.S.A.)

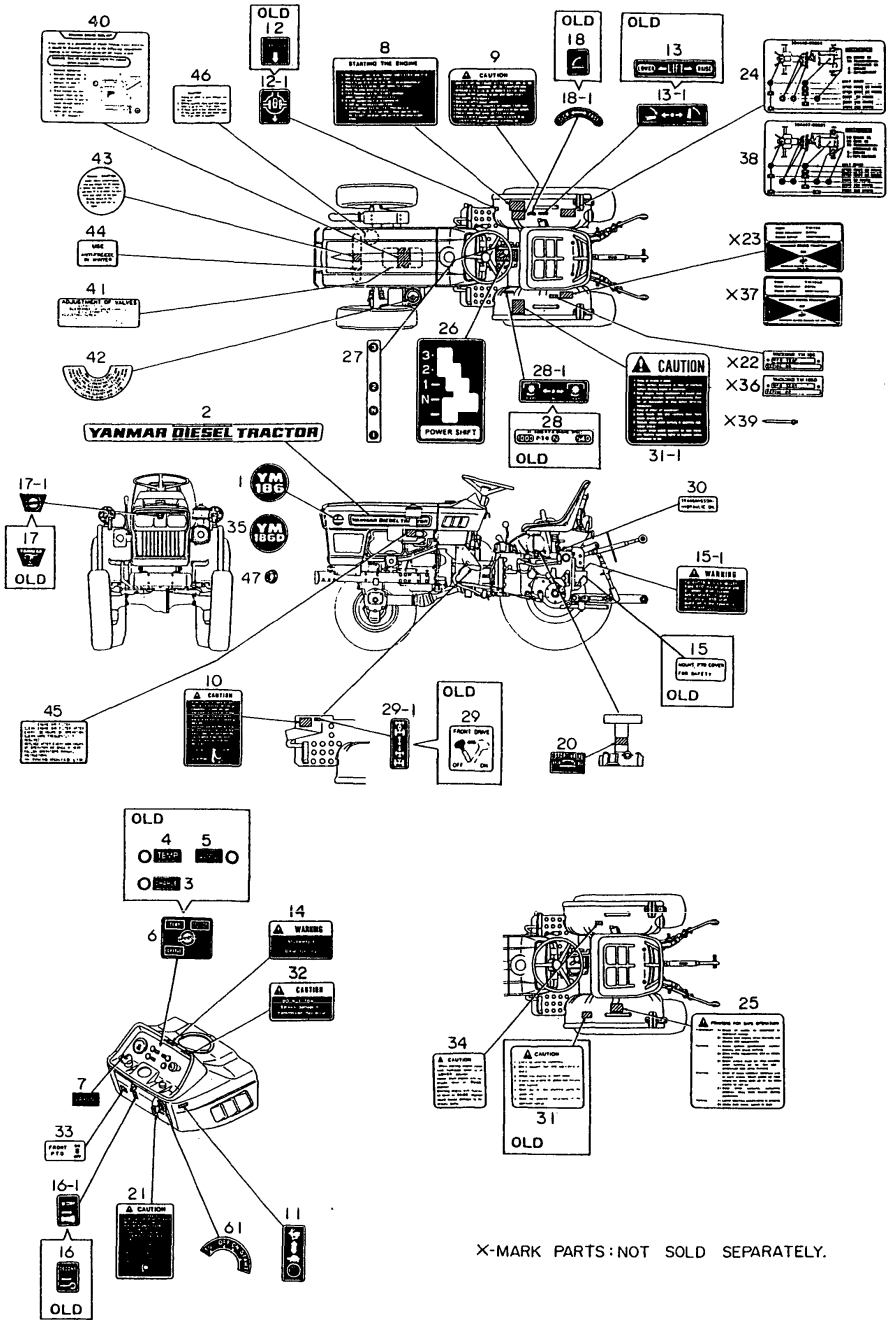

X-MARK PARTS : NOT SOLD SEPARATELY.

0CT10-G22801

65. LABELS (FLOOR SHIFT:U.S.A.)

(A)=YM186 (FLOOR
(B)=YM186D(FLOOR
(C)=YM186 (COLUM
(D)=YM186D(COLUM
(E)=
(F)=

REF.	LEV.	PARTS NO.	DESCRIPTION	Q'TY (A)	(B)	(C)	(D)	(E)	(F)	I	R
	(A=*)	(B=*)									

N:Old $\frac{\text{Yes}}{\text{No}}$ New, Q:Old $\frac{\text{No}}{\text{Yes}}$ New, R:Old $\frac{\text{Yes}}{\text{Yes}}$ New, S:Old $\frac{\text{No}}{\text{No}}$ New, W:Add, Z:Discontinued, F:Interchangeable by set, K:Q'ty Change

(C)Copy Rights YANMAR CO.,LTD.

Fig.66. LABELS (COLUMN SHIFT:U.S.A.)

Fig. 66 LABELS [English] (Column Shift type:U.S.A.)

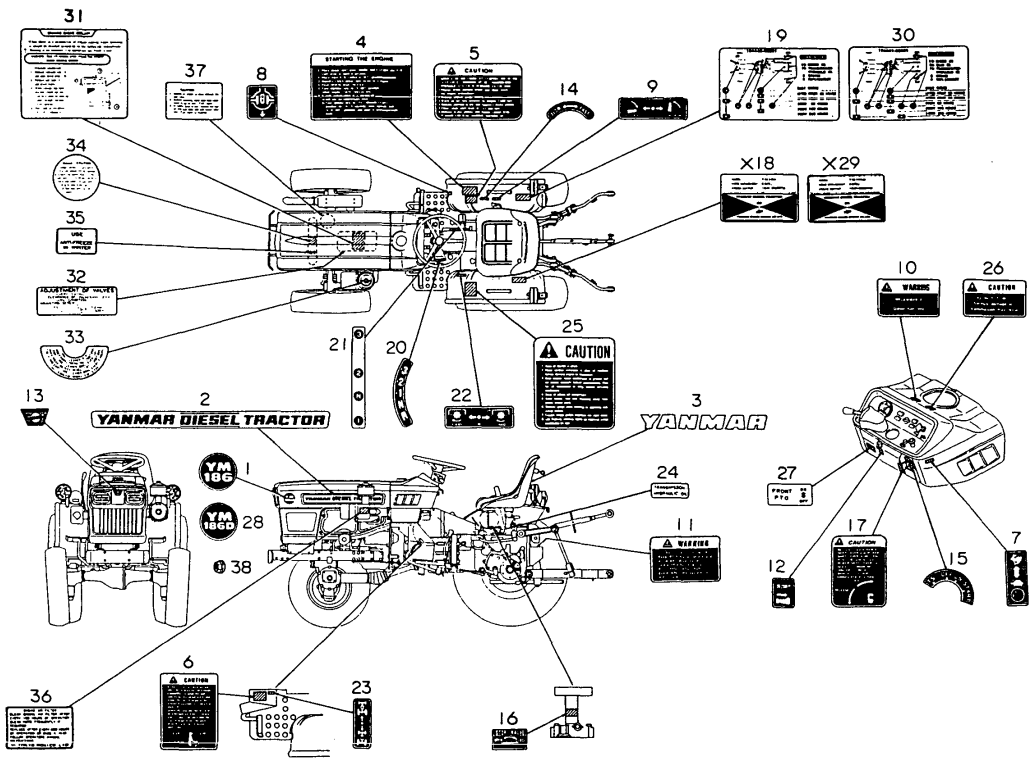

0CT10-G22801

66. LABELS (COLUMN SHIFT:U.S.A.)

(A)=YM186 (FLOOR (D)=YM186D(COLUM
(B)=YM186D(FLOOR (E)=
(C)=YM186 (COLUM (F)=

REF.	LEV.	PARTS NO.	DESCRIPTION	Q'TY (A)	(B)	(C)	(D)	(E)	(F)	I	R
1	1	194446-64721	LABEL, SIDE			2					
1-1	1	194446-64722	LABEL, SIDE (C=*1981.)			2				N	
2	1	194446-64751	LABEL, MODEL			2	2				
2-1	1	194446-64752	LABEL, SIDE (C=*1981.) (D=*1981.)			2	2			N	
3	1	194170-65890	LABEL, SEAT			1	1				
3-1	1	194170-65891	LABEL, SEAT (C=*1981.) (D=*1981.)			1	1			N	
4	1	194446-65351	LABEL, ENG. STARTING			1	1				
4-1	1	194446-65352	LABEL, ENG. STARTING (C=*1982.06) (D=*1982.06)			1	1			R	
5	1	194446-65361	LABEL, COLD STARTING			1	1				
6	1	194446-65461	LABEL,CLUTCH CAUTION			1	1				
7	1	194240-65432	LABEL,THROTTLE LEVER			1	1				
8	1	194240-65441	LABEL, DIFF. LOCK			1	1				
9	1	194240-65511	LABEL,HYDRAULIC LIFT			1	1				
10	1	194240-65671	LABEL, FUEL INDICAT.			1	1				
11	1	194170-65620	LABEL, WARNING			1	1				
12	1	194370-65451	LABEL, DECOMPRESSION			1	1				
13	1	194448-65600	EMBLEM, FRONT			1	1				
14	1	194345-65690	LABEL, SLOW RETURN			1	1				
15	1	194310-65720	LABEL, KEY SWITCH			1	1				
16	1	194345-65750	LABEL,HYDRAULIC STOP			1	1				
17	1	194170-65470	LABEL,LEVER POSITION			1	1				
19	1	194446-65551	LABEL, LUBRICATION			1					
20	1	194170-65580	LABEL, MAIN SHIFT			1	1				
21	1	194446-65591	LABEL, RANGE SHIFT			1	1				
22	1	194273-65611	LABEL, P.T.O. SHIFT			1	1				
23	1	194447-65621	LABEL, 4-DRIVE WHEEL				1				
24	1	194446-65630	LABEL, GEAR OIL			1	1				
25	1	194275-65660	LABEL, CAUTION			1	1				
26	1	194446-65681	LABEL, DO NOT TOW			1	1				
27	1	194446-65730	LABEL, FRONT P.T.O			1	1				
27-1	1	194446-65731	LABEL, FRONT P.T.O (C=*) (D=*)			1	1			N	
28	1	194447-64721	LABEL, SIDE				2				
28-1	1	194447-64722	LABEL, SIDE (D=*1981.)				2			N	
30	1	194447-65551	LABEL, LUBRICATION				1				
31	1	121254-07150	LABEL, WATER DRAIN			1	1				
32	1	124064-07160	LABEL, VALVE ADJUST.			1	1				
33	1	121454-12480	LABEL, PRE-CLEANER			1	1				
34	1	124764-44800	LABEL, RADIATOR			1	1				
35	1	124764-44920	LABEL, ANTI-FREEZING			1	1				
36	1	121454-12520	LABEL, AIR-CLEANER			1	1				
37	1	124764-44810	LABEL, RESERVE TANK			1	1				
38	1	194990-22120	NUT W/WASHER 5 (C=*) (D=*)			4	4			W	
39	1	194800-65350	LABEL, MAIN SHIFT (C=T/# 20920) (D=T/# 42407)			2	2			W	

N:Old $\overset{\text{Yes}}{\underset{\text{No}}{\leftrightarrow}}$ New, Q:Old $\overset{\text{No}}{\underset{\text{Yes}}{\leftrightarrow}}$ New, R:Old $\overset{\text{Yes}}{\underset{\text{Yes}}{\leftrightarrow}}$ New, S:Old $\overset{\text{No}}{\underset{\text{No}}{\leftrightarrow}}$ New, W:Add, Z:Discontinued, F:Interchangeable by set, K:Q'ty Change

(C)Copy Rights YANMAR CO.,LTD.

Fig.67. LABELS (FLOOR SHIFT:ENGLAND)

Fig. 67 LABELS [English] (Floor Shift type:ENGLAND)

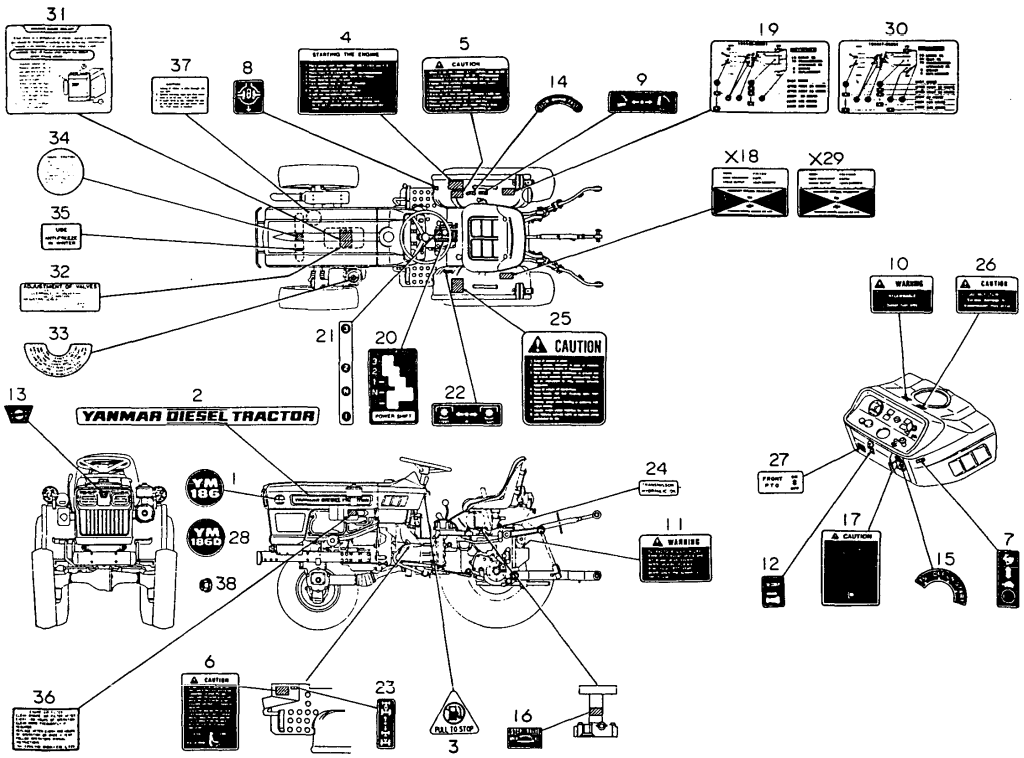

0CT10-G22801

67. LABELS (FLOOR SHIFT:ENGLAND)

(A)=YM186 (FLOOR (D)=YM186D(COLUM
(B)=YM186D(FLOOR (E)=
(C)=YM186 (COLUM (F)=

REF.	LEV.	PARTS NO.	DESCRIPTION	Q'TY (A)	(B)	(C)	(D)	(E)	(F)	I	R
1	1	194446-64721	LABEL, SIDE	2							
1-1	1	194446-64722	LABEL, SIDE	2						N	
	(A=*1981.)										
2	1	194446-64751	LABEL, MODEL	2	2						
2-1	1	194446-64752	LABEL, SIDE	2	2					N	
	(A=*1981.)	(B=*1981.)									
3	1	194448-65370	LABEL, ENGINE STOP	1	1						
3-1	1	194802-65370	LABEL, ENGINE STOP	1	1					N	
	(A=T/# 00737)	(B=T/# 01698)									
4	1	194446-65351	LABEL, ENG. STARTING	1	1						
4-1	1	194446-65352	LABEL, ENG. STARTING	1	1					R	
	(A=*1982.06)	(B=*1982.06)									
5	1	194446-65361	LABEL, COLD STARTING	1	1						
6	1	194446-65461	LABEL,CLUTCH CAUTION	1	1						
7	1	194240-65432	LABEL,THROTTLE LEVER	1	1						
8	1	194240-65441	LABEL, DIFF. LOCK	1	1						
9	1	194240-65511	LABEL,HYDRAULIC LIFT	1	1						
10	1	194240-65671	LABEL, FUEL INDICAT.	1	1						
11	1	194170-65620	LABEL, WARNING	1	1						
12	1	194370-65451	LABEL, DECOMPRESSION	1	1						
13	1	194448-65600	EMBLEM, FRONT	1	1						
14	1	194345-65690	LABEL, SLOW RETURN	1	1						
15	1	194310-65720	LABEL, KEY SWITCH	1	1						
16	1	194345-65750	LABEL,HYDRAULIC STOP	1	1						
17	1	194446-65472	LABEL,LEVER POSITION	1	1						
19	1	194446-65551	LABEL, LUBRICATION	1							
20	1	194446-65580	LABEL, MAIN SHIFT	1	1						
21	1	194446-65591	LABEL, RANGE SHIFT	1	1						
22	1	194273-65611	LABEL, P.T.O. SHIFT	1	1						
23	1	194447-65621	LABEL, 4-DRIVE WHEEL		1						
24	1	194446-65630	LABEL, GEAR OIL	1	1						
25	1	194275-65660	LABEL, CAUTION	1	1						
26	1	194446-65681	LABEL, DO NOT TOW	1	1						
27	1	194446-65730	LABEL, FRONT P.T.O	1	1						
27-1	1	194446-65731	LABEL, FRONT P.T.O	1	1					N	
	(A=*1980.)	(B=*1980.)									
28	1	194447-64721	LABEL, SIDE		2						
28-1	1	194447-64722	LABEL, SIDE		2					N	
		(B=*1981.)									
30	1	194447-65551	LABEL, LUBRICATION		1						
31	1	121254-07150	LABEL, WATER DRAIN	1	1						
32	1	124064-07160	LABEL, VALVE ADJUST.	1	1						
33	1	121454-12480	LABEL, PRE-CLEANER	1	1						
34	1	124764-44800	LABEL, RADIATOR	1	1						
35	1	124764-44920	LABEL, ANTI-FREEZING	1	1						
36	1	121454-12520	LABEL, AIR-CLEANER	1	1						
37	1	124764-44810	LABEL, RESERVE TANK	1	1						
38	1	194990-22120	NUT W/WASHER 5	4	4					W	
	(A=*)	(B=*)									
39	1	194800-65350	LABEL, MAIN SHIFT	2	2					W	
	(A=T/# 00760)	(B=T/# 01756)									

N:Old $\overset{\text{Yes}}{\underset{\text{No}}{\leftrightarrow}}$ New, Q:Old $\overset{\text{No}}{\underset{\text{Yes}}{\leftrightarrow}}$ New, R:Old $\overset{\text{Yes}}{\underset{\text{Yes}}{\leftrightarrow}}$ New, S:Old $\overset{\text{No}}{\underset{\text{No}}{\leftrightarrow}}$ New, W:Add, Z:Discontinued, F:Interchangeable by set, K:Q'ty Change

(C)Copy Rights YANMAR CO.,LTD.

Fig.68. LABELS (FLOOR SHIFT:FRANCE)

Fig. 68 LABELS [French] (Floor Shift type:FRANCE)

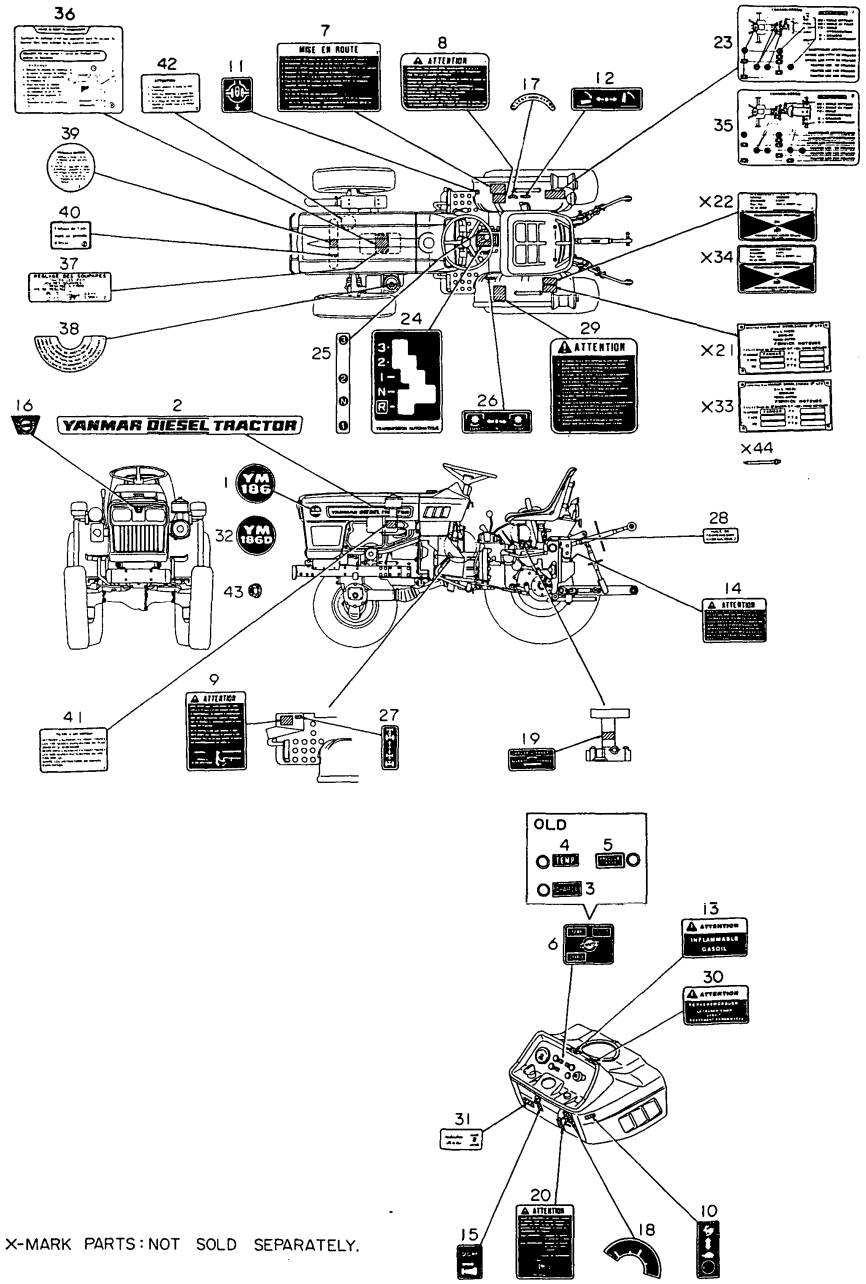

68. LABELS (FLOOR SHIFT:FRANCE)

(A)=YM186 (FLOOR (D)=YM186D(COLUM
(B)=YM186D(FLOOR (E)=
(C)=YM186 (COLUM (F)=

REF.	LEV.	PARTS NO.	DESCRIPTION	Q'TY (A)	(B)	(C)	(D)	(E)	(F)	I	R
1	1	194446-64721	LABEL, SIDE	2							
1-1	1	194446-64722	LABEL, SIDE	2						N	
	(A=*1981.)										
2	1	194446-64751	LABEL, MODEL	2	2						
2-1	1	194446-64752	LABEL, SIDE	2	2					N	
	(A=*1981.)		(B=*1981.)								
3	1	194446-65310	LABEL, PILOT LAMP	1	1					Z	
	(A=T/# 00860)		(B=T/# 02184)								
4	1	194446-65321	LABEL, C.W. TEMP.	1	1					Z	
	(A=T/# 00860)		(B=T/# 02184)								
5	1	194448-65330	LABEL,L.O.PRESSURE	1	1					Z	
	(A=T/# 00860)		(B=T/# 02184)								
6	1	194448-65300	LABEL, PILOT LAMP	1	1					W	
	(A=T/# 00860)		(B=T/# 02184)								
7	1	194448-65350	LABEL, ENG. STARTING	1	1						
8	1	194448-65360	LABEL, COLD STARTING	1	1						
9	1	194448-65460	LABEL,CLUTCH CAUTION	1	1						
10	1	194240-65432	LABEL,THROTTLE LEVER	1	1						
11	1	194240-65441	LABEL, DIFF. LOCK	1	1						
12	1	194240-65511	LABEL,HYDRAULIC LIFT	1	1						
13	1	194240-98221	LABEL, FUEL OIL	1	1						
14	1	194448-65620	LABEL, WARNING	1	1						
15	1	194370-65451	LABEL, DECOMPRESSION	1	1						
16	1	194448-65600	EMBLEM, FRONT	1	1						
17	1	194340-98421	LABEL, SLOW RETURN	1	1						
18	1	194240-98251	LABEL, KEY SWITCH	1	1						
19	1	194340-98391	LABEL,HYDRAULIC STOP	1	1						
20	1	194448-65470	LABEL,LEVER POSITION	1	1						
23	1	194448-65550	LABEL, LUBRICATION	1							
24	1	194448-65580	LABEL, MAIN SHIFT	1	1						
25	1	194446-65591	LABEL, RANGE SHIFT	1	1						
26	1	194273-65611	LABEL, P.T.O. SHIFT	1	1						
27	1	194447-65621	LABEL, 4-DRIVE WHEEL		1						
28	1	194448-65630	LABEL, GEAR OIL	1	1						
29	1	194448-65660	LABEL, CAUTION	1	1						
30	1	194448-65680	LABEL, DO NOT TOW	1	1						
31	1	194448-65730	LABEL,FRONT P.T.O.	1	1						
32	1	194447-64721	LABEL, SIDE		2						
32-1	1	194447-64722	LABEL, SIDE		2					N	
			(D=*1981.)								
35	1	194449-65550	LABEL, LUBRICATION		1						
36	1	121241-07150	LABEL, WATER DRAIN	1	1						
37	1	124040-07160	LABEL, VALVE ADJUST.	1	1						
38	1	121440-12520	LABEL, PRE-CLEANER(F	1	1						
39	1	124740-44800	LABEL, RADIATOR	1	1						
40	1	124740-44920	LABEL, ANTI-FREEZING	1	1						
41	1	121440-12480	LABEL, AIR CLEANER(F	1	1						
42	1	124740-44810	LABEL, SUB-TANK	1	1						
43	1	194990-22120	NUT W/WASHER 5	4	4						
44	1	194080-64780	RIVET	4	4					W	
	(A=T/# 00760)		(B=T/# 01756)								

N:Old $\frac{\text{Yes}}{\text{No}}$ New, Q:Old $\frac{\text{No}}{\text{Yes}}$ New, R:Old $\frac{\text{Yes}}{\text{Yes}}$ New, S:Old $\frac{\text{No}}{\text{No}}$ New, W:Add, Z:Discontinued, F:Interchangeable by set, K:Q'ty Change

(C)Copy Rights YANMAR CO.,LTD.

Fig.69. LABELS (COLUMN SHIFT:FRANCE)

Feg. 69 LABELS [French] (Column Shift type:FRANCE)

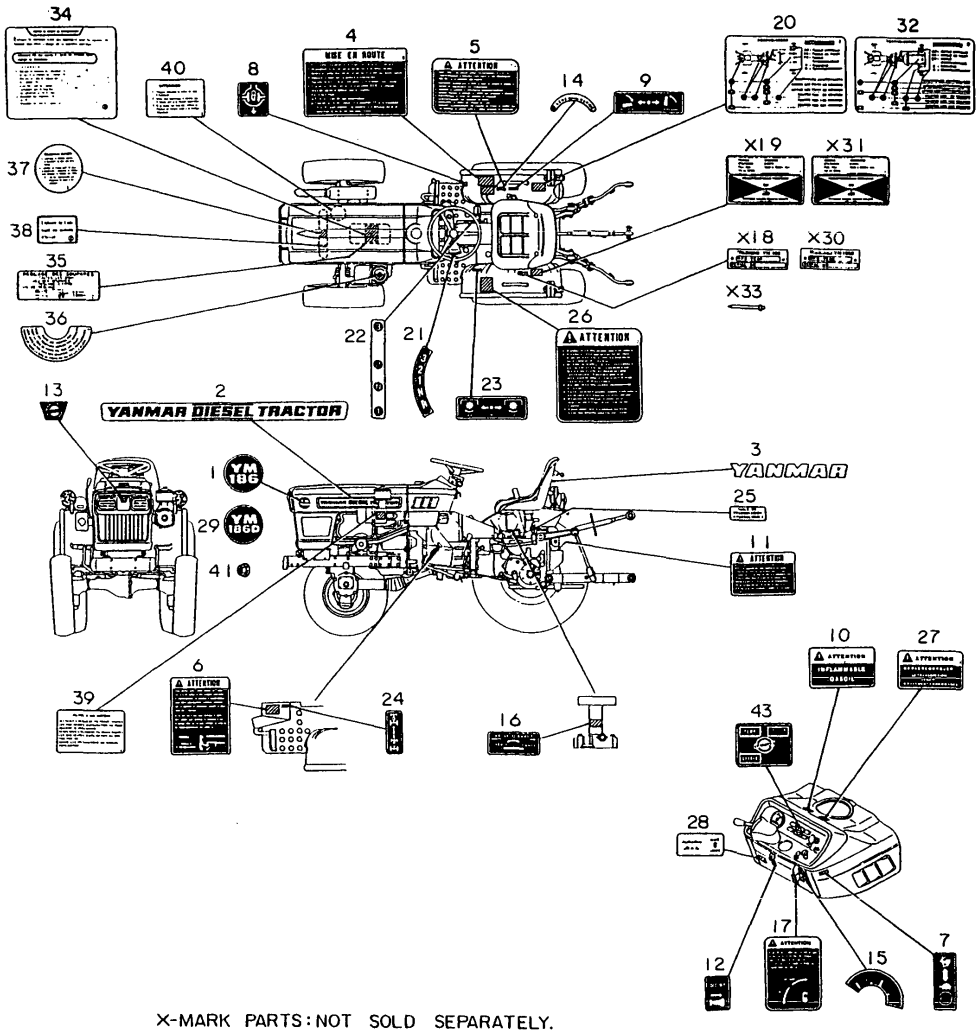

X-MARK PARTS:NOT SOLD SEPARATELY.

69. LABELS (COLUMN SHIFT:FRANCE)

(A)=YM186 (FLOOR (D)=YM186D(COLUM
(B)=YM186D(FLOOR (E)=
(C)=YM186 (COLUM (F)=

REF.	LEV.	PARTS NO.	DESCRIPTION	Q'TY (A)	(B)	(C)	(D)	(E)	(F)	I	R
1	1	194446-64721	LABEL, SIDE			2					
1-1	1	194446-64722	LABEL, SIDE (C=*1981.)			2					N
2	1	194446-64751	LABEL, MODEL			2	2				
2-1	1	194446-64752	LABEL, SIDE (C=*1981.) (D=*1981.)			2	2				N
3	1	194170-65890	LABEL, SEAT			1	1				
3-1	1	194170-65891	LABEL, SEAT (C=*1981.) (D=*1981.)			1	1				N
3-2	1	194170-65891	LABEL, SEAT (C=T/# 20967) (D=T/# 42802)			1	1				Z
4	1	194448-65350	LABEL, ENG. STARTING			1	1				
5	1	194448-65360	LABEL, COLD STARTING			1	1				
6	1	194448-65460	LABEL,CLUTCH CAUTION			1	1				
7	1	194240-65432	LABEL,THROTTLE LEVER			1	1				
8	1	194240-65441	LABEL, DIFF. LOCK			1	1				
9	1	194240-65511	LABEL,HYDRAULIC LIFT			1	1				
10	1	194240-98221	LABEL, FUEL OIL			1	1				
11	1	194448-65620	LABEL, WARNING			1	1				
12	1	194370-65451	LABEL, DECOMPRESSION			1	1				
13	1	194448-65600	EMBLEM, FRONT			1	1				
14	1	194340-98421	LABEL, SLOW RETURN			1	1				
15	1	194240-98251	LABEL, KEY SWITCH			1	1				
16	1	194340-98391	LABEL,HYDRAULIC STOP			1	1				
17	1	194500-65470	LABEL,LEVER POSITION			1	1				
17-1	1	194448-65470	LABEL,LEVER POSITION (C=*) (D=*)			1	1				N
20	1	194448-65550	LABEL, LUBRICATION			1					
21	1	194170-65580	LABEL, MAIN SHIFT			1	1				
22	1	194446-65591	LABEL, RANGE SHIFT			1	1				
23	1	194273-65611	LABEL, P.T.O. SHIFT			1	1				
24	1	194447-65621	LABEL, 4-DRIVE WHEEL				1				
25	1	194448-65630	LABEL, GEAR OIL			1	1				
26	1	194448-65660	LABEL, CAUTION			1	1				
27	1	194448-65680	LABEL, DO NOT TOW			1	1				
28	1	194448-65730	LABEL,FRONT P.T.O.			1	1				
29	1	194447-64721	LABEL, SIDE				2				
29-1	1	194447-64722	LABEL, SIDE (D=*1981.)				2				N
32	1	194449-65550	LABEL, LUBRICATION				1				
33	1	194080-64780	RIVET			2	2				
34	1	121241-07150	LABEL, WATER DRAIN			1	1				
35	1	124040-07160	LABEL, VALVE ADJUST.			1	1				
36	1	121440-12520	LABEL, PRE-CLEANER(F			1	1				
37	1	124740-44800	LABEL, RADIATOR			1	1				
38	1	124740-44920	LABEL, ANTI-FREEZING			1	1				
39	1	121440-12480	LABEL, AIR CLEANER(F			1	1				
40	1	124740-44810	LABEL, SUB-TANK			1	1				
41	1	194990-22120	NUT W/WASHER 5 (C=*) (D=*)			4	4				W
42	1	194800-65350	LABEL, MAIN SHIFT			2	2				W

N:Old $\overset{\text{Yes}}{\underset{\text{No}}{\leftrightarrow}}$ New, Q:Old $\overset{\text{No}}{\underset{\text{Yes}}{\leftrightarrow}}$ New, R:Old $\overset{\text{Yes}}{\underset{\text{Yes}}{\leftrightarrow}}$ New, S:Old $\overset{\text{No}}{\underset{\text{No}}{\leftrightarrow}}$ New, W:Add, Z:Discontinued, F:Interchangeable by set, K:Q'ty Change

++ CONTINUE ++

(C)Copy Rights YANMAR CO.,LTD.

Fig.69. LABELS (COLUMN SHIFT:FRANCE)

Feg. 69 LABELS [French] (Column Shift type:FRANCE)

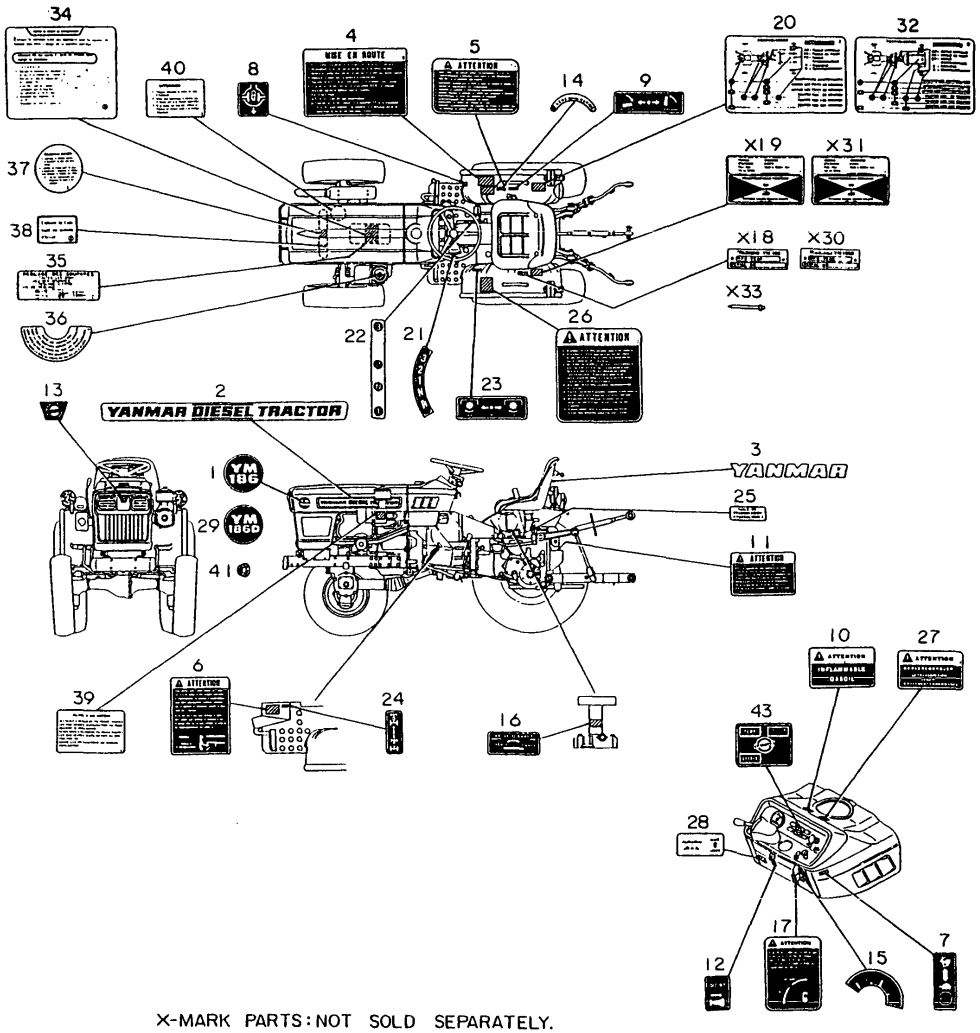

X-MARK PARTS:NOT SOLD SEPARATELY.

69. LABELS (COLUMN SHIFT:FRANCE)

(A)=YM186 (FLOOR (D)=YM186D(COLUM
(B)=YM186D(FLOOR (E)=
(C)=YM186 (COLUM (F)=

REF.	LEV.	PARTS NO.	DESCRIPTION	Q'TY (A)	(B)	(C)	(D)	(E)	(F)	I	R
			(C=T/# 20920) (D=T/# 42407)								
43	1	194448-65300	LABEL, PILOT LAMP			1	1			W	
			(C=*) (D=*)								

N:Old ◄Yes/No► New, Q:Old ◄No/Yes► New, R:Old ◄Yes/Yes► New, S:Old ◄No/No► New, W:Add, Z:Discontinued, F:Interchangeable by set, K:Q'ty Change

(C)Copy Rights YANMAR CO.,LTD.

Fig.70. 3-POINT HITCH (FLOOR SHIFT)

Fig. 70 THREE-POINT HITCH (Floor Shift type)

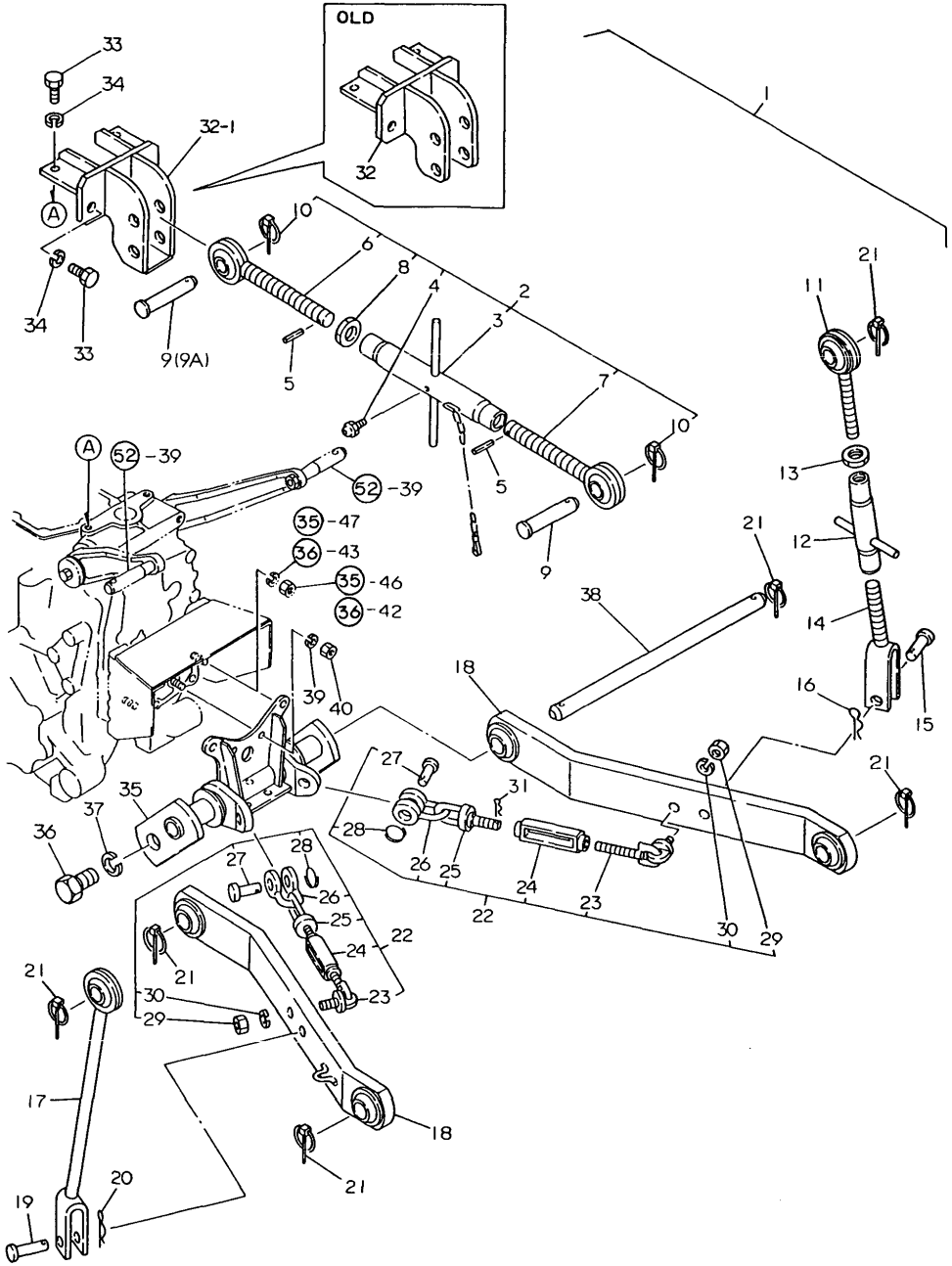

0CT10-G22801

70. 3-POINT HITCH (FLOOR SHIFT)

(A)=YM186 (FLOOR (D)=YM186D(COLUM
(B)=YM186D(FLOOR (E)=
(C)=YM186 (COLUM (F)=

REF.	LEV.	PARTS NO.	DESCRIPTION	Q'TY (A)	(B)	(C)	(D)	(E)	(F)	I	R
2	1	794446-71100-X	LINK ASSY, TOP	1	1						
3	2	194446-71500-X	TURNBUCKLE	1	1						
4	2	24764-010000	NIPPLE M6F, GREASE	1	1						
5	2	22351-040024	SPRING PIN 4X24	2	2						
6	2	194446-71700-X	EYE-BOLT (L)	1	1						
7	2	194446-71600-X	EYE-BOLT (R)	1	1						
8	2	26756-240002	LOCK NUT M24 PLATED	1	1						
9	2	194150-71230	PIN, TOP LINK	2	2						
9-1	2	194150-71230	PIN, TOP LINK	1	1					K	
	(A=*1982.09)	(B=*1982.09)									
9A	2	195080-15060	PIN, HITCH	1	1					W	
	(A=*1982.09)	(B=*1982.09)									
10	2	794130-71410	PIN ASSY,BALL SOCKET	2	2						
11	1	194446-72200-X	BOLT W/BALL, EYE	1	1						
12	1	194420-72230-X	TURNBUCKLE	1	1						
13	1	26756-180002	LOCK NUT M18 PLATED	1	1						
14	1	194446-72400-X	YOKE, LIFT LINK	1	1						
15	1	194145-72550	PIN, LIFT YOKE	1	1						
16	1	22360-160000	SNAP PIN 16	1	1						
17	1	194446-72300-X	LINK ASSY, LIFT	1	1						
18	1	194446-73100-X	LINK ASSY, LOWER	2	2						
19	1	194145-72550	PIN, LIFT YOKE	1	1						
20	1	22360-160000	SNAP PIN 16	1	1						
21	1	794130-71410	PIN ASSY,BALL SOCKET	6	6						
22	1	794446-74600-X	CHAIN ASSY, CHECK	2	2						
23	2	194420-74800	CHAIN ASSY, CHECK	2	2						
23-1	2	194420-74820	EYE BOLT (R)	2	2					S	
	(A=T/# 00860)	(B=T/# 02189)									
24	2	194150-74670	TURNBUCKLE	2	2						
25	2	194150-74720	EYE BOLT (L)	2	2						
26	2	194080-74621	BODY (SA10), SHACKLE	2	2						
27	2	194080-74631	PIN (SA10), SHACKLE	2	2						
28	2	194145-75250	RING	2	2						
29	2	26716-140002	NUT M14	2	2						
30	2	22217-140000	SPRING WASHER 14	2	2						
31	2	22360-200000	SNAP PIN 20	2	2						
32	1	194446-71110-X	TURNBUCKLE, TOP LINK	1	1						
32-1	1	194446-71111-X	TURNBUCKLE, TOP LINK	1	1					N	
	(A=T/# 00510)	(B=T/# 01212)									
33	1	26116-120252	BOLT M12X 25 PLATED	4	4						
34	1	22217-120000	WASHER 12,SPRING	4	4						
35	1	194446-73210-X	BRACKET, LOWER LINK	1	1						
36	1	26156-220352	BOLT M22X 35 PLATED	2	2						
37	1	22217-220000	SPRING WASHER 22	2	2						
38	1	194446-73150-U	PIN, LOWER LINK	1	1						
39	1	22217-100000	SPRING WASHER 10	2	2						
40	1	26716-100002	NUT M10	2	2						

N:Old $\overset{\text{Yes}}{\underset{\text{No}}{\leftrightarrow}}$ New, Q:Old $\overset{\text{No}}{\underset{\text{Yes}}{\leftrightarrow}}$ New, R:Old $\overset{\text{Yes}}{\underset{\text{Yes}}{\leftrightarrow}}$ New, S:Old $\overset{\text{No}}{\underset{\text{No}}{\leftrightarrow}}$ New, W:Add, Z:Discontinued, F:Interchangeable by set, K:Q'ty Change

(C)Copy Rights YANMAR CO.,LTD.

Fig.71. 3-POINT HITCH(COLUMN SHIFT:USA

Fig. 71 THREE-POINT HITCH (Column Shift type:U.S.A.)

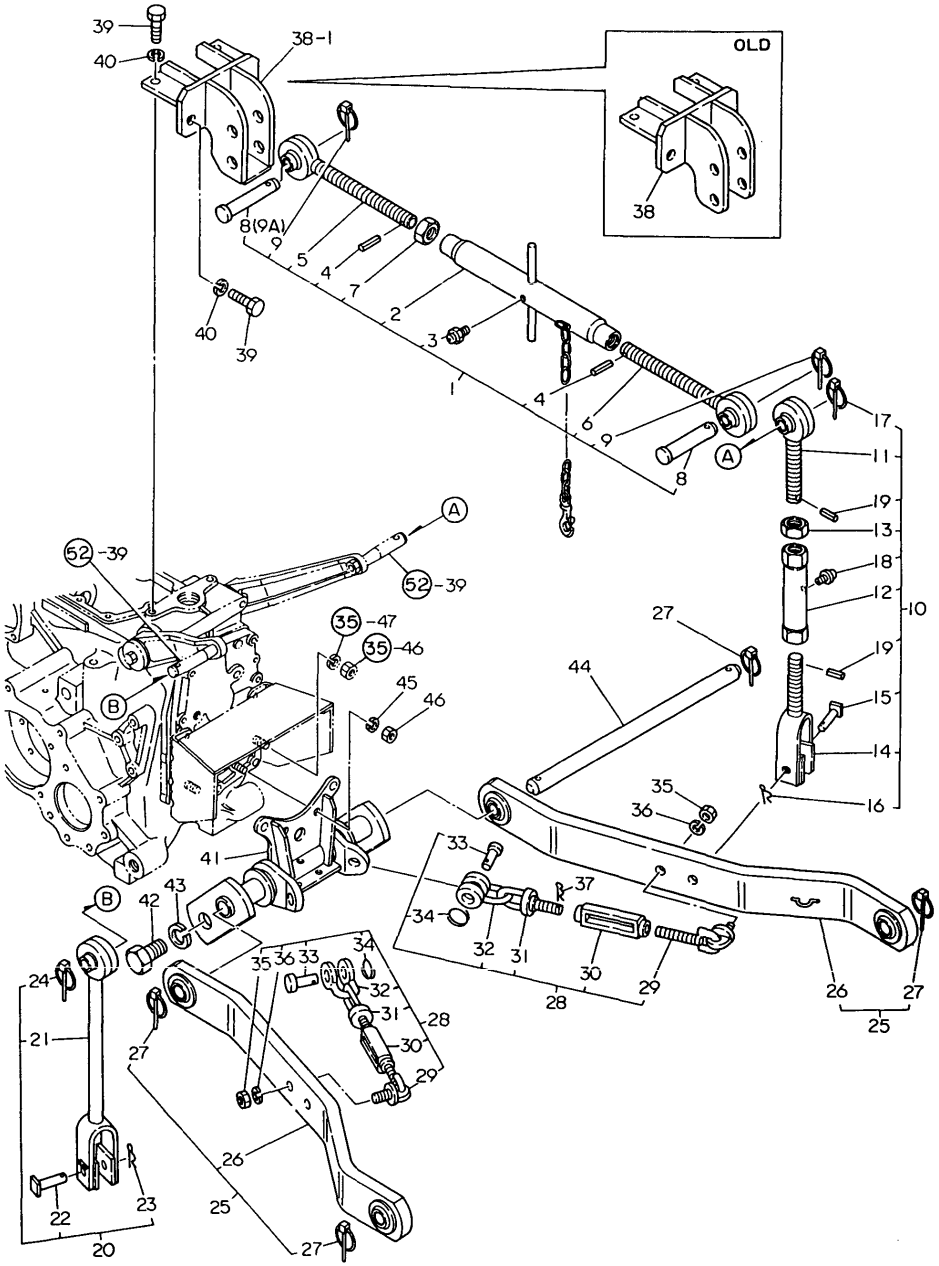

71. 3-POINT HITCH(COLUMN SHIFT:USA

(A)=YM186 (FLOOR (D)=YM186D(COLUM
(B)=YM186D(FLOOR (E)=
(C)=YM186 (COLUM (F)=

REF.	LEV.	PARTS NO.	DESCRIPTION	Q'TY (A)	(B)	(C)	(D)	(E)	(F)	I	R
1	1	794500-71100-X	LINK ASSY, TOP			1	1				
2	2	194286-71500-X	TURNBUCKLE			1	1				
3	2	24761-010000	NIPPLE M6F, GREASE			1	1				
4	2	22351-040024	SPRING PIN 4X24			2	2				
5	2	194322-71700-X	EYE-BOLT (L)			1	1				
6	2	194322-71600-X	EYE-BOLT (R)			1	1				
7	2	26756-240002	LOCK NUT M24 PLATED			1	1				
8	2	194150-71230	PIN, TOP LINK			2	2				
8-1	2	194150-71230	PIN, TOP LINK			1	1			K	
			(C=*1982.09) (D=*1982.09)								
9	2	794130-71410	PIN ASSY,BALL SOCKET			2	2				
9A	2	195080-15060	PIN, HITCH			1	1			W	
			(C=*1982.09) (D=*1982.09)								
10	1	794500-72100-X	LINK ASSY, LIFT			1	1				
11	2	194500-72200-X	BOLT W/BALL, EYE			1	1				
12	2	194500-72230-X	TURNBUCKLE			1	1				
13	2	26756-200002	LOCK NUT M20 PLATED			1	1				
14	2	194500-72450-X	YOKE, LIFT LINK			1	1				
15	2	194197-72551	PIN, LIFT YOKE			1	1				
16	2	22360-160000	SNAP PIN 16			1	1				
17	2	794130-71410	PIN ASSY,BALL SOCKET			1	1				
18	2	24761-010000	NIPPLE M6F, GREASE			1	1				
19	2	22351-040022	SPRING PIN 4X22			2	2				
20	1	794500-72200-X	LINK ASSY, LIFT			1	1				
21	2	194500-72300-X	LINK ASSY, LIFT			1	1				
22	2	194197-72551	PIN, LIFT YOKE			1	1				
23	2	22360-160000	SNAP PIN 16			1	1				
24	2	794130-71410	PIN ASSY,BALL SOCKET			1	1				
25	1	794500-73100-X	LINK ASSY, LOWER			2	2				
26	2	194500-73100-X	LINK ASSY, LOWER			2	2				
27	2	794130-71410	PIN ASSY,BALL SOCKET			4	4				
28	1	794446-74600-X	CHAIN ASSY, CHECK			2	2				
29	2	194420-74800	CHAIN ASSY, CHECK			2	2				
29-1	2	194420-74820	EYE BOLT (R)			2	2			S	
			(C=T/# 20965) (D=T/# 42874)								
30	2	194150-74670-X	TURNBUCKLE, CHAIN			2	2				
31	2	194150-74720	EYE BOLT (L)			2	2				
32	2	194080-74621	BODY (SA10), SHACKLE			2	2				
33	2	194080-74631	PIN (SA10), SHACKLE			2	2				
34	2	194145-75250	RING			2	2				
35	2	26716-140002	NUT M14			2	2				
36	2	22217-140000	SPRING WASHER 14			2	2				
37	2	22360-200000	SNAP PIN 20			2	2				
38	1	194446-71110-X	TURNBUCKLE, TOP LINK			1	1				
38-1	1	194446-71111-X	TURNBUCKLE, TOP LINK			1	1			N	
			(C=T/# 20101) (D=T/# 40127)								
39	1	26116-120252	BOLT M12X 25 PLATED			4	4				
40	1	22217-120000	WASHER 12,SPRING			4	4				
41	1	194446-73210-X	BRACKET, LOWER LINK			1	1				
42	1	26156-220352	BOLT M22X 35 PLATED			2	2				
43	1	22217-220000	SPRING WASHER 22			2	2				

N:Old $\overset{\text{Yes}}{\underset{\text{No}}{\leftrightarrow}}$ New, Q:Old $\overset{\text{No}}{\underset{\text{Yes}}{\leftrightarrow}}$ New, R:Old $\overset{\text{Yes}}{\underset{\text{Yes}}{\leftrightarrow}}$ New, S:Old $\overset{\text{No}}{\underset{\text{No}}{\leftrightarrow}}$ New, W:Add, Z:Discontinued, F:Interchangeable by set, K:Q'ty Change

++ CONTINUE ++

(C)Copy Rights YANMAR CO.,LTD.

Fig.71. 3-POINT HITCH(COLUMN SHIFT:USA

Fig. 71 THREE-POINT HITCH (Column Shift type:U.S.A.)

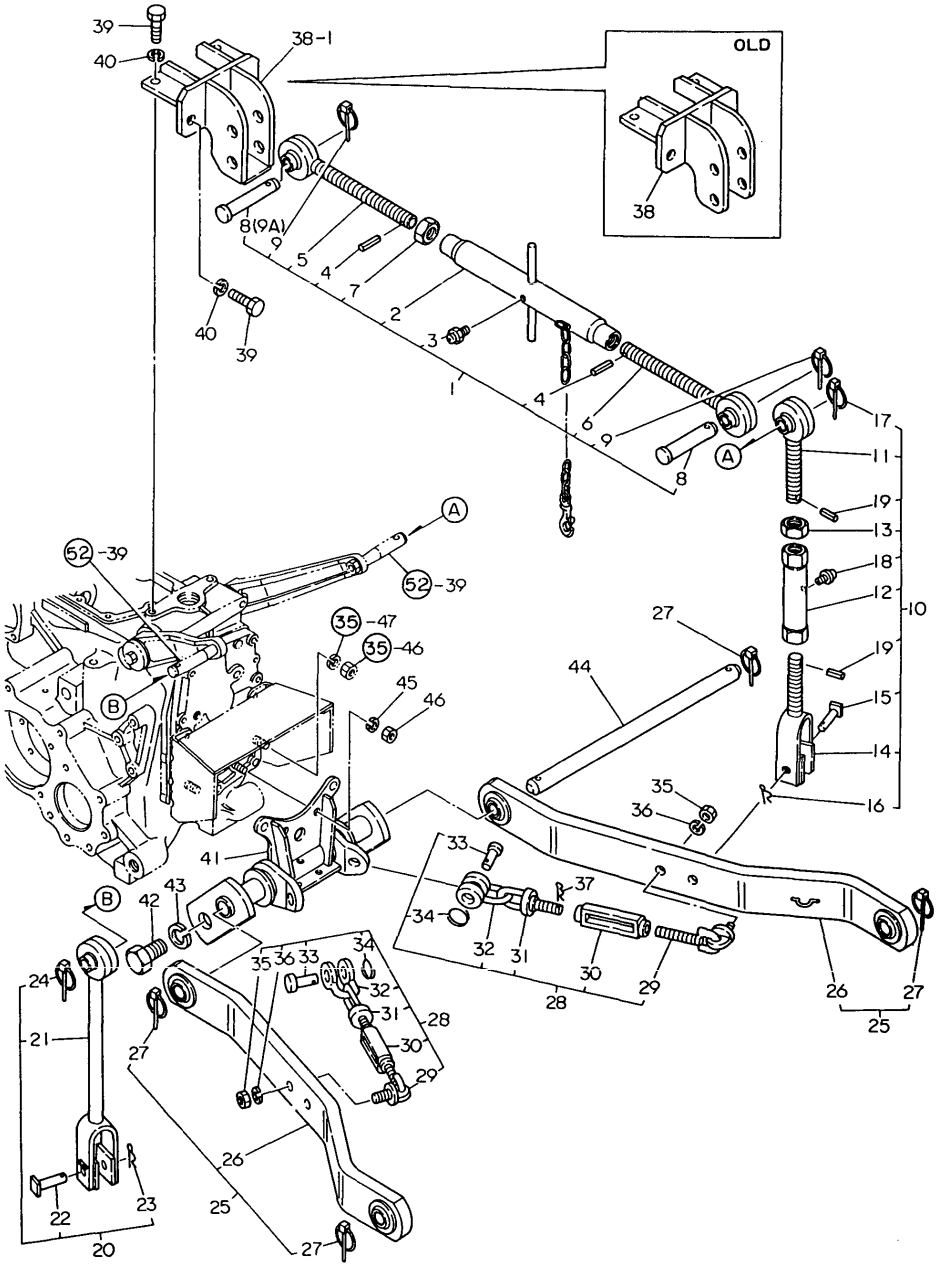

71. 3-POINT HITCH(COLUMN SHIFT:USA

(A)=YM186 (FLOOR
(B)=YM186D(FLOOR
(C)=YM186 (COLUM
(D)=YM186D(COLUM
(E)=
(F)=

REF.	LEV.	PARTS NO.	DESCRIPTION	Q'TY (A)	(B)	(C)	(D)	(E)	(F)	I	R
44	1	194446-73150-U	PIN, LOWER LINK			1	1				
45	1	22217-100000	SPRING WASHER 10			2	2				
46	1	26716-100002	NUT M10			2	2				

N:Old ←Yes/No→ New, Q:Old ←No/Yes→ New, R:Old ←Yes/Yes→ New, S:Old ←No/No→ New, W:Add, Z:Discontinued, F:Interchangeable by set, K:Q'ty Change

(C)Copy Rights YANMAR CO.,LTD.

Fig.72. DRAWBAR (EXCEPT ENGLAND)

Fig. 72 DRAWBAR (EXCEPT ENGLAND)

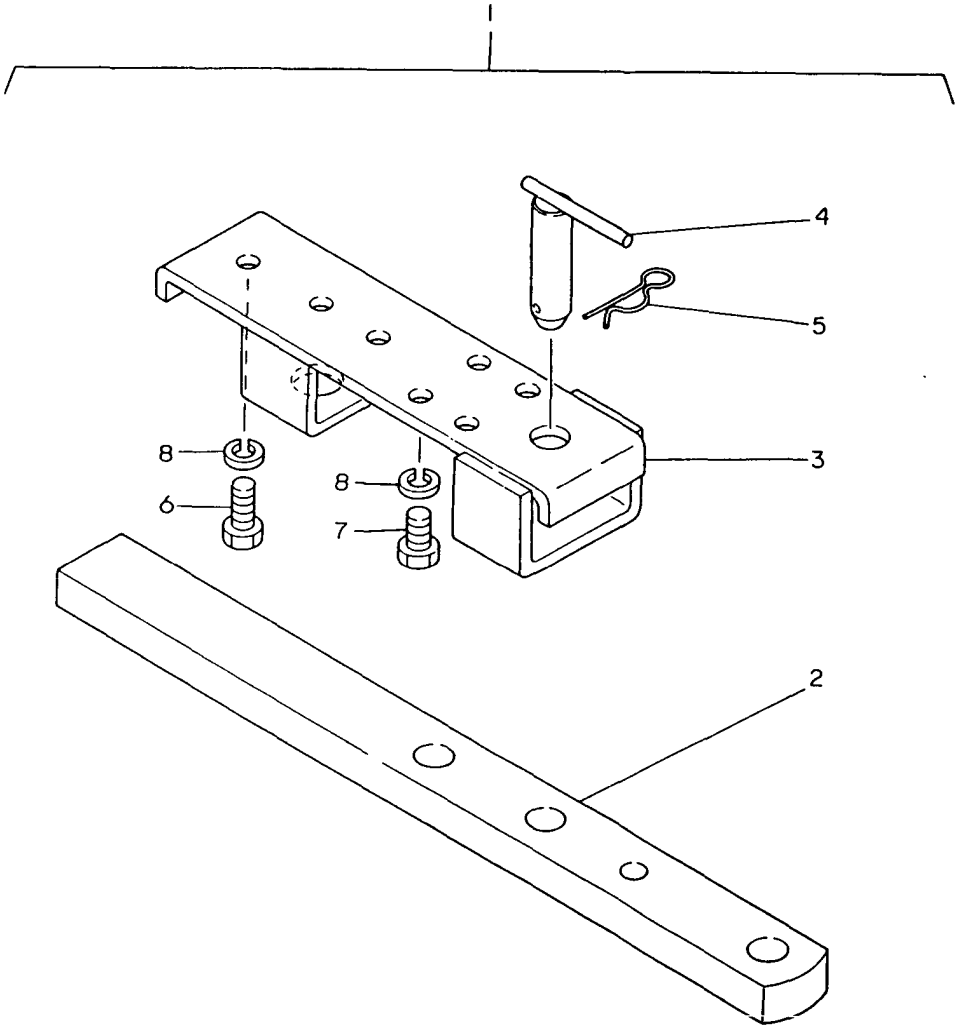

0CT10-G22801

72. DRAWBAR (EXCEPT ENGLAND)

(A)=YM186 (FLOOR (D)=YM186D(COLUM
(B)=YM186D(FLOOR (E)=
(C)=YM186 (COLUM (F)=

REF.	LEV.	PARTS NO.	DESCRIPTION	Q'TY (A)	(B)	(C)	(D)	(E)	(F)	I	R
1	1	794446-75700-X	HITCH, DRAWBER	1	1	1	1				
2	2	194446-75210-X	DRAWBER, REAR	1	1	1	1				
3	2	194446-75720-X	BRACKET, DRAWBER	1	1	1	1				
4	2	194240-75740	PIN 22X 75, HITCH	1	1	1	1				
5	2	22360-190000	SNAP PIN 19	1	1	1	1				
6	2	26116-120252	BOLT M12X 25 PLATED	3	3	3	3				
6-1	2	26013-120252	BOLT M12X 25	3	3	3	3			N	
	(A=*1982.12)	(B=*1982.12)	(C=*1982.12) (D=*1982.12)								
7	2	26116-120222	BOLT M12X 22 PLATED	4	4	4	4				
		(B=*1982.12)									
7-1	2	26013-120252	BOLT M12X 25	4	4	4	4			N	
	(A=*1982.12)	(B=*1982.12)	(C=*1982.12) (D=*1982.12)								
8	2	22217-120000	WASHER 12,SPRING	7	7	7	7			Z	
	(A=*1982.12)	(B=*1982.12)	(C=*1982.12) (D=*1982.12)								

N:Old $\xleftarrow[\text{No}]{\text{Yes}}$ New, Q:Old $\xleftarrow[\text{Yes}]{\text{No}}$ New, R:Old $\xleftarrow[\text{Yes}]{\text{Yes}}$ New, S:Old $\xleftarrow[\text{No}]{\text{No}}$ New, W:Add, Z:Discontinued, F:Interchangeable by set, K:Q'ty Change

(C)Copy Rights YANMAR CO.,LTD.

Fig.73. DRAWBAR (ENGLAND)

Fig. 73 DRAWBAR (ENGLAND)

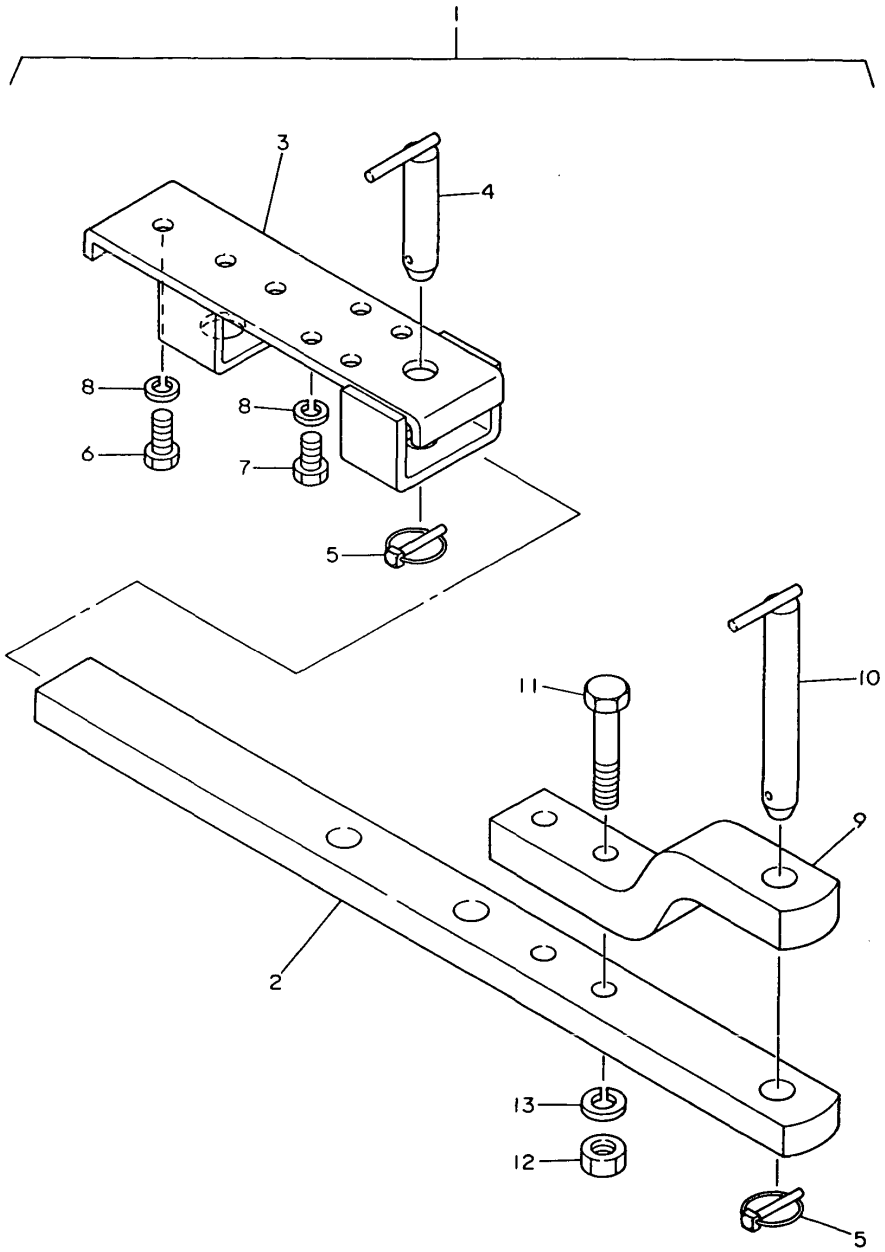

0CT10-G22801

73. DRAWBAR (ENGLAND)

(A)=YM186 (FLOOR (D)=YM186D(COLUM
(B)=YM186D(FLOOR (E)=
(C)=YM186 (COLUM (F)=

REF.	LEV.	PARTS NO.	DESCRIPTION	Q'TY (A)	(B)	(C)	(D)	(E)	(F)	I	R
1	1	794448-75700-X	HITCH, DRAWBER	1	1	1	1				
2	2	194448-75710-X	HITCH, DRAWBER	1	1	1	1				
3	2	194446-75720-X	BRACKET, DRAWBER	1	1	1	1				
4	2	194242-75750	PIN 22X 90, HITCH	1	1	1	1				
4-1	2	194292-75750	PIN 22X100, HITCH	1	1	1	1			N	
	(A=T/# 00790)	(B=T/# 01965)	(C=T/# 20952)	(D=T/# 42656)							
5	2	794130-71410	PIN ASSY,BALL SOCKET	2	2	2	2				
6	2	26116-120252	BOLT M12X 25 PLATED	3	3	3	3				
6-1	2	26013-120252	BOLT M12X 25	3	3	3	3			N	
	(A=*1982.12)	(B=*1982.12)	(C=*1982.12)	(D=*1982.12)							
7	2	26116-120222	BOLT M12X 22 PLATED	4	4	4	4				
7-1	2	26013-120252	BOLT M12X 25	4	4	4	4			N	
	(A=*1982.12)	(B=*1982.12)	(C=*1982.12)	(D=*1982.12)							
8	2	22217-120000	WASHER 12,SPRING	7	7	7	7			Z	
	(A=*1982.12)	(B=*1982.12)	(C=*1982.12)	(D=*1982.12)							
9	2	194242-75730-X	HITCH, DRAWBER	1	1	1	1				
10	2	194242-75740	PIN 22X163.5, HITCH	1	1	1	1				
11	2	26116-160752	BOLT M16X 75 PLATED	2	2	2	2				
12	2	26716-160002	NUT M16	2	2	2	2				
13	2	22217-160000	SPRING WASHER 16	2	2	2	2				

N:Old ◄Yes/No► New, Q:Old ◄No/Yes► New, R:Old ◄Yes/Yes► New, S:Old ◄No/No► New, W:Add, Z:Discontinued, F:Interchangeable by set, K:Q'ty Change

(C)Copy Rights YANMAR CO.,LTD.

Fig.74. FRONT POWER TAKE OFF

Fig. 74 FRONT POWER TAKE OFF [Optional Parts]

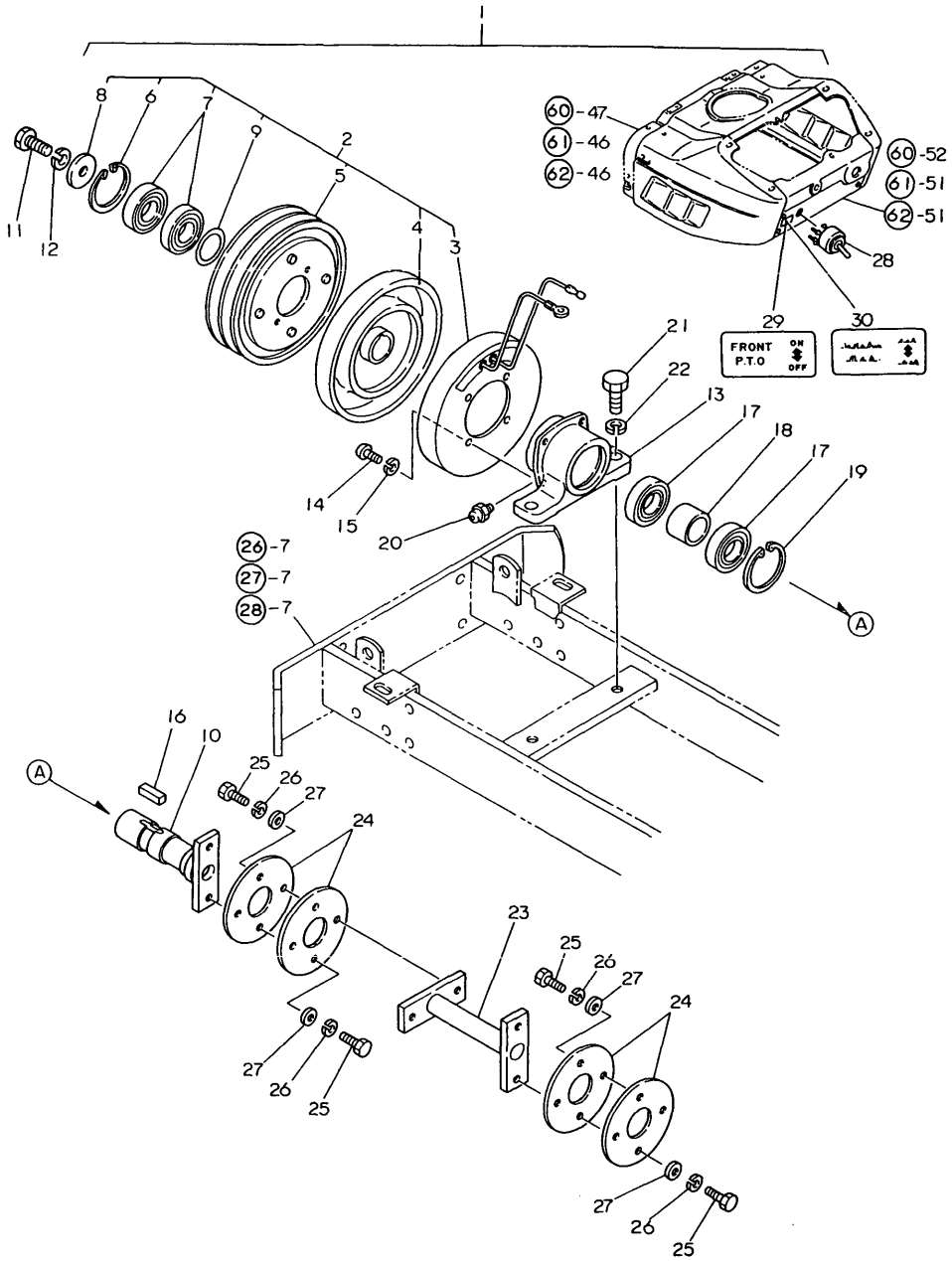

74. FRONT POWER TAKE OFF

(A)=YM186 (FLOOR (D)=YM186D(COLUM
(B)=YM186D(FLOOR (E)=
(C)=YM186 (COLUM (F)=

REF.	LEV.	PARTS NO.	DESCRIPTION	Q'TY (A)	(B)	(C)	(D)	(E)	(F)	I	R
1	1	794446-83100-X	P.T.O. KIT, FRONT	1	1	1	1				
2	2	194446-83110-X	CLUTCH ASSY, MAGNET.	1	1	1	1				
3	3	194446-83120	COIL, FIELD	1	1	1	1				
4	3	194446-83130	ROTOR	1	1	1	1				
5	3	194446-83140	ARMATURE	1	1	1	1				
6	3	194446-83150	CIRCLIP	1	1	1	1				
7	3	194446-83160	BALL BEARING	2	2	2	2				
8	3	194446-83170	WASHER	1	1	1	1				
9	3	194446-83180	SHIM	3	3	3	3				
10	2	194446-83220-X	SHAFT, P.T.O	1	1	1	1				
11	2	26116-120302	BOLT M12X 30 PLATED	1	1	1	1				
11-1	2	26013-120302	BOLT W/WASHER M12X30	1	1	1	1			N	
	(A=*)	(B=*)	(C=*) (D=*)								
12	2	22217-120000	WASHER 12,SPRING	1	1	1	1			Z	
	(A=*)	(B=*)	(C=*) (D=*)								
13	2	194446-83210-X	CASE, BEARING	1	1	1	1				
14	2	26557-060162	SCREW M 6X 16	4	4	4	4				
15	2	22217-060000	SPRING WASHER 6	4	4	4	4				
16	2	22512-070280	KEY 7X 28	1	1	1	1				
17	2	24102-060064	BALL BEARING	2	2	2	2				
17-1	2	24104-060064	BALL BEARING	2	2	2	2			N	
	(A=*)	(B=*)	(C=*) (D=*)								
18-1	2	194446-83240	SPACER	1	1	1	1				
19-1	2	22262-000550	CIRCLIP R-55	1	1	1	1				
20	2	24764-010000	NIPPLE M6F, GREASE	1	1	1	1				
20-1	2	24764-010000	NIPPLE M6F, GREASE	1	1	1	1			Z	
	(A=*)	(B=*)	(C=*) (D=*)								
21	2	26116-140302	BOLT M14X 30 PLATED	2	2	2	2				
21-1	2	26013-140302	BOLT M14X 30	2	2	2	2			N	
	(A=*)	(B=*)	(C=*) (D=*)								
22	2	22217-140000	SPRING WASHER 14	2	2	2	2			Z	
	(A=*)	(B=*)	(C=*) (D=*)								
23	2	194446-83250-X	SHAFT	1	1	1	1				
24	2	194446-83260	DISC, FRONT P.T.O.	4	4	4	4				
25	2	26116-100202	BOLT M10X 20 PLATED	8	8	8	8				
25-1	2	26013-100202	BOLT W/WASHER M10X20	8	8	8	8			N	
	(A=*)	(B=*)	(C=*) (D=*)								
26	2	22217-100000	SPRING WASHER 10	8	8	8	8			Z	
	(A=*)	(B=*)	(C=*) (D=*)								
27	2	22117-100000	WASHER 10	8	8	8	8				
28	2	194446-83310	SWITCH, FRONT P.T.O.	1	1	1	1			W	
	(A=*1980.)	(B=*1980.)	(C=*1980.) (D=*1980.)								
29	2	194446-65730	LABEL, FRONT P.T.O	1	1	1	1			W	1
	(A=*)	(B=*)	(C=*) (D=*)								
29-1	2	194446-65731	LABEL, FRONT P.T.O	1	1	1	1			N	1
	(A=*1980.)	(B=*1980.)	(C=*1980.) (D=*1980.)								
30	2	194448-65730	LABEL,FRONT P.T.O.	1	1	1	1				2

N:Old $\overset{\text{Yes}}{\underset{\text{No}}{\leftrightarrows}}$ New, Q:Old $\overset{\text{No}}{\underset{\text{Yes}}{\leftrightarrows}}$ New, R:Old $\overset{\text{Yes}}{\underset{\text{Yes}}{\leftrightarrows}}$ New, S:Old $\overset{\text{No}}{\underset{\text{No}}{\leftrightarrows}}$ New, W:Add, Z:Discontinued, F:Interchangeable by set, K:Q'ty Change

(C)Copy Rights YANMAR CO.,LTD.

Fig.75. TIRES (2-WHEEL DRIVE:U.S.A.)

Fig. 75 TIRES (FRONT & REAR) [2-Wheel Drive]

U.S.A. only

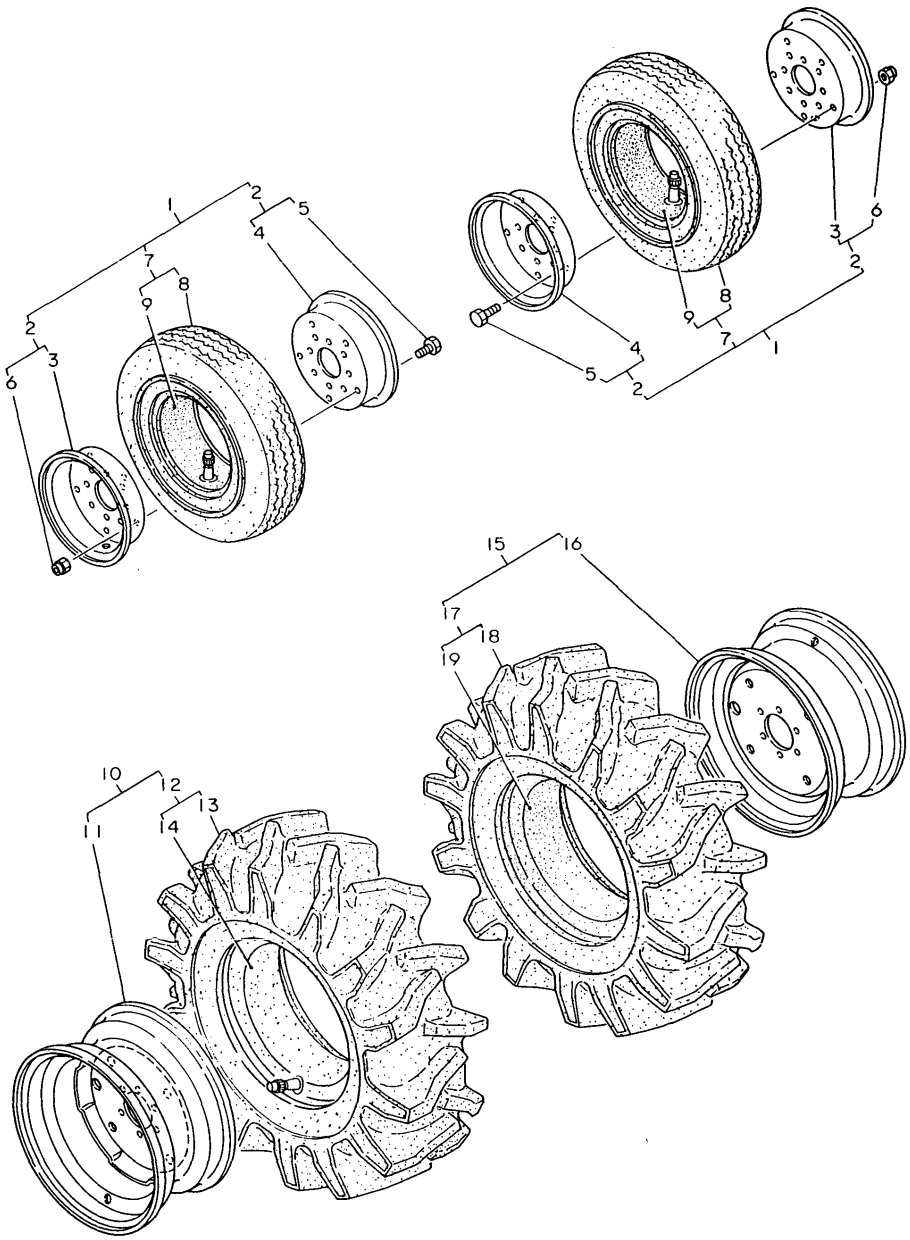

0CT10-G22801

75. TIRES (2-WHEEL DRIVE:U.S.A.)

(A)=YM186 (FLOOR
(B)=YM186D(FLOOR
(C)=YM186 (COLUM
(D)=YM186D(COLUM
(E)=
(F)=

REF.	LEV.	PARTS NO.	DESCRIPTION	Q'TY (A)	(B)	(C)	(D)	(E)	(F)	I	R
1	1	YTI446-12900	TIRE ASSY, FRONT	2		2					1
2	2	YTI446-12950	WHEEL ASSY, FRONT	2		2					1
3	3	YTI446-12960	WHEEL(A),W/VALV.HOLE	2		2					1
4	3	YTI446-12970	WHEEL(B)	2		2					1
5	3	YTI446-12980	BOLT 3/8-24NFX3/4	10		10					1
6	3	YTI446-12990	NUT 3/8-24NF	10		10					1
7	2	YTI446-12910	TIRE W/TUBE,FRONT	2		2					1
8	3	YTI446-12920	TIRE	2		2					1
9	3	YTI446-12930	TUBE	2		2					1
10	1	YTI446-34900	TIRE ASSY(L), REAR	1		1					1
11	2	YTI446-34860	WHEEL	1		1					1
12	2	YTI446-34910	TIRE W/TUBE	1		1					1
13	3	YTI446-34920	TIRE	1		1					1
14	3	YTI446-34930	TUBE	1		1					1
15	1	YTI446-34950	TIRE ASSY(R), REAR	1		1					1
16	2	YTI446-34860	WHEEL	1		1					1
17	2	YTI446-34910	TIRE W/TUBE	1		1					1
18	3	YTI446-34920	TIRE	1		1					1
19	3	YTI446-34930	TUBE	1		1					1

N:Old $\overset{\text{Yes}}{\underset{\text{No}}{\leftrightarrows}}$ New, Q:Old $\overset{\text{No}}{\underset{\text{Yes}}{\leftrightarrows}}$ New, R:Old $\overset{\text{Yes}}{\underset{\text{Yes}}{\leftrightarrows}}$ New, S:Old $\overset{\text{No}}{\underset{\text{No}}{\leftrightarrows}}$ New, W:Add, Z:Discontinued, F:Interchangeable by set, K:Q'ty Change

(C)Copy Rights YANMAR CO.,LTD.

Fig.76. TURF-TIRES(2-WHEEL DRIVE:USA)

Fig. 76 TURF-TIRES (FRONT & REAR) [2-Wheel Drive]

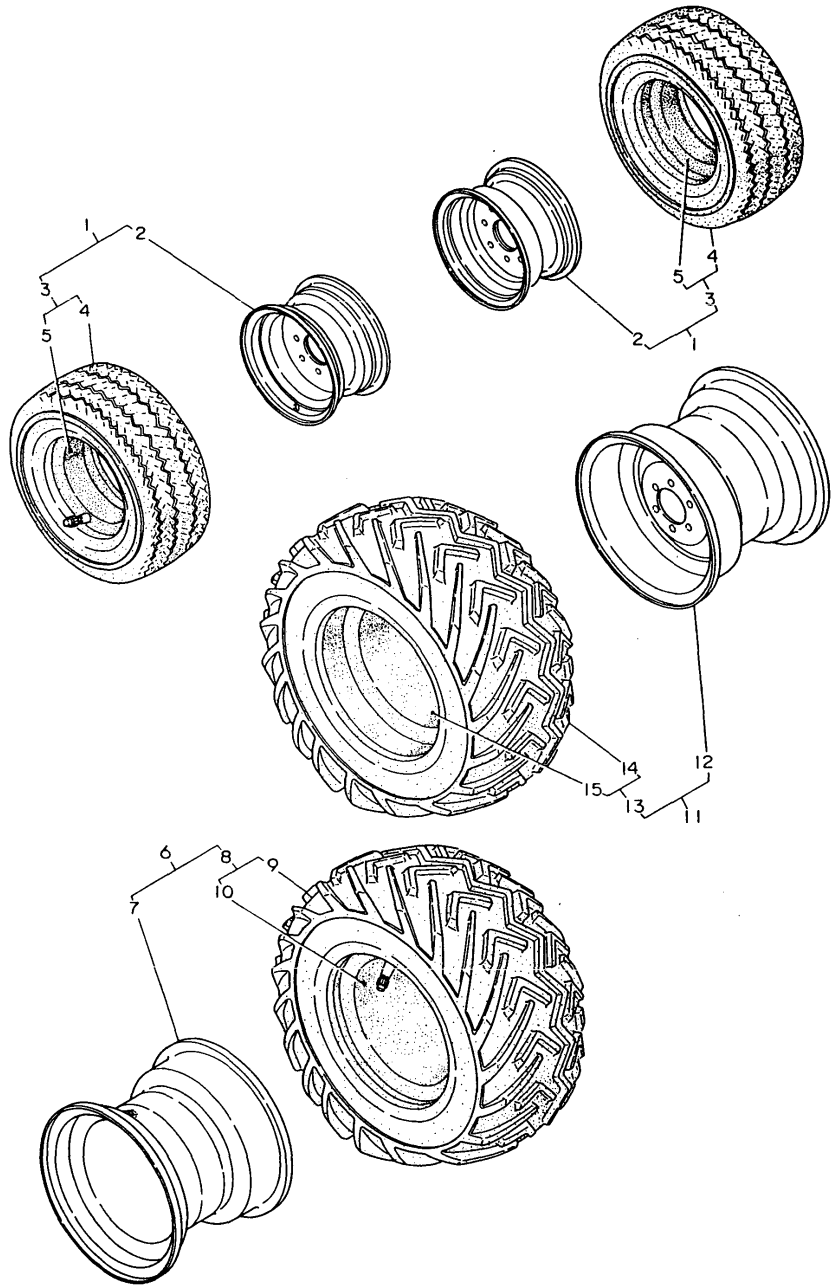

0CT10-G22801

76. TURF-TIRES(2-WHEEL DRIVE:USA)

(A)=YM186 (FLOOR
(B)=YM186D(FLOOR
(C)=YM186 (COLUM
(D)=YM186D(COLUM
(E)=
(F)=

REF.	LEV.	PARTS NO.	DESCRIPTION	Q'TY (A)	(B)	(C)	(D)	(E)	(F)	I	R
1	1	YTI446-12800	TURF-TIRE ASSY,FRONT	2		2					1
2	2	YTI446-12850	WHEEL	2		2					1
3	2	YTI446-12810	TURF-TIRE W/TUBE	2		2					1
4	3	YTI446-12820	TURF-TIRE	2		2					1
5	3	YTI446-12830	TUBE	2		2					1
6	1	YTI446-34700	TURF-TIRE ASSY(L),R	1		1					1
7	2	YTI446-34810	WHEEL	1		1					1
8	2	YTI446-34710	TURF-TIRE W/TUBE	1		1					1
9	3	YTI446-34720	TURF-TIRE	1		1					1
10	3	YTI446-34730	TUBE	1		1					1
11-1	1	YTI446-34750	TURF-TIRE ASSY(R),R	1		1					1
12	2	YTI446-34810	WHEEL	1		1					1
13	2	YTI446-34710	TURF-TIRE W/TUBE	1		1					1
14	3	YTI446-34720	TURF-TIRE	1		1					1
15	3	YTI446-34730	TUBE	1		1					1

N:Old $\overset{\text{Yes}}{\underset{\text{No}}{\leftrightarrows}}$ New, Q:Old $\overset{\text{No}}{\underset{\text{Yes}}{\leftrightarrows}}$ New, R:Old $\overset{\text{Yes}}{\underset{\text{Yes}}{\leftrightarrows}}$ New, S:Old $\overset{\text{No}}{\underset{\text{No}}{\leftrightarrows}}$ New, W:Add, Z:Discontinued, F:Interchangeable by set, K:Q'ty Change

(C)Copy Rights YANMAR CO.,LTD.

Fig.77. TIRES (4-WHEEL DRIVE:U.S.A.)

Fig. 77 TIRES (FRONT & REAR) [4-Wheel Drive]

U.S.A. only

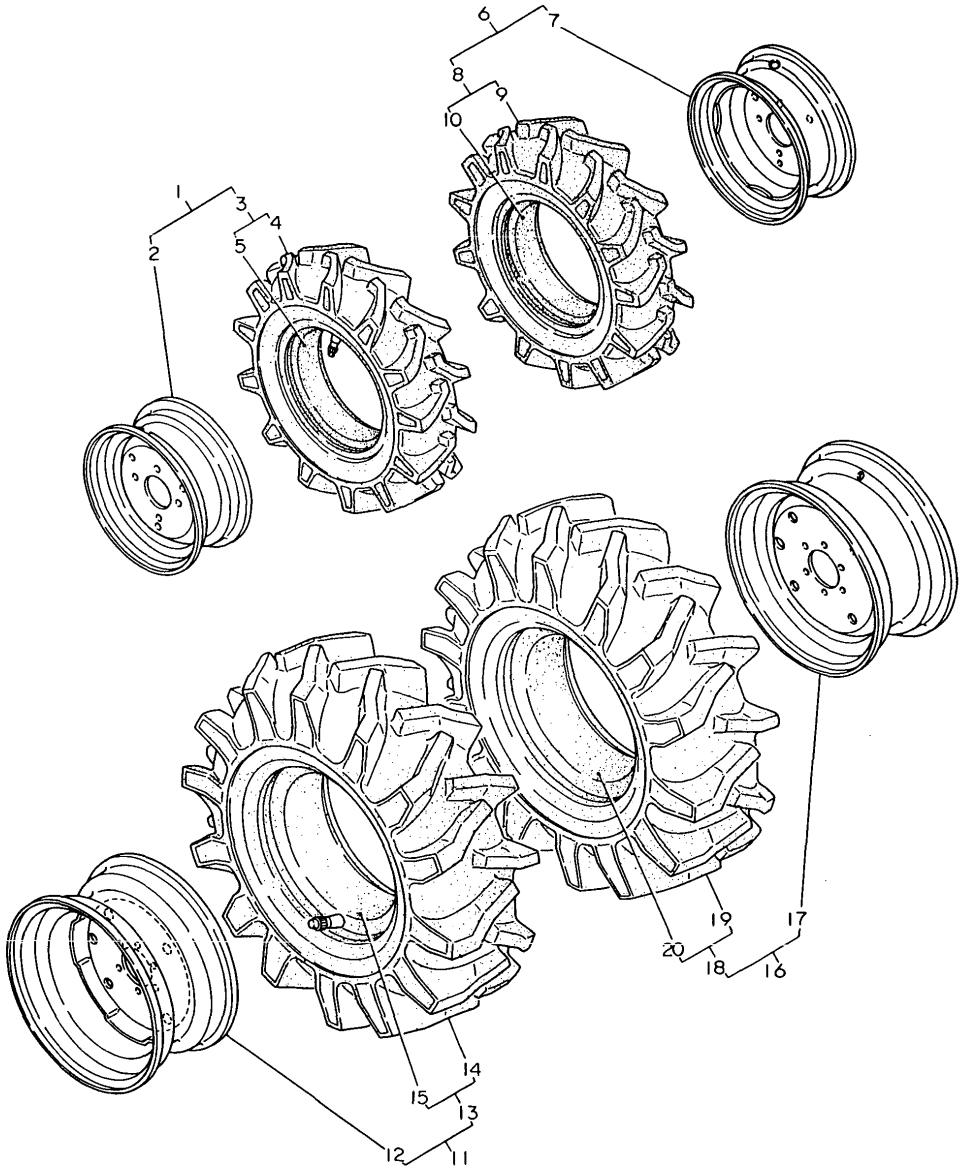

0CT10-G22801

77. TIRES (4-WHEEL DRIVE:U.S.A.)

(A)=YM186 (FLOOR
(B)=YM186D(FLOOR
(C)=YM186 (COLUM
(D)=YM186D(COLUM
(E)=
(F)=

REF.	LEV.	PARTS NO.	DESCRIPTION	Q'TY (A)	(B)	(C)	(D)	(E)	(F)	I	R
1	1	794447-14700-Q	TIRE ASSY (L), FRONT		1		1				
2	2	194447-14710-Q	WHEEL 5JAX12		1		1				
3	2	194447-14800	TIRE W/TUBE		1		1				
4	3	194447-14810	TIRE 6-12		1		1				
5	3	194447-14820	TUBE		1		1				
6	1	794447-14800-Q	TIRE ASSY (R), FRONT		1		1				
7	2	194447-14710-Q	WHEEL 5JAX12		1		1				
8	2	194447-14800	TIRE W/TUBE		1		1				
9	3	194447-14810	TIRE 6-12		1		1				
10	3	194447-14820	TUBE		1		1				
11	1	YTI446-34900	TIRE ASSY(L), REAR		1		1				1
12	2	YTI446-34860	WHEEL		1		1				1
13	2	YTI446-34910	TIRE W/TUBE		1		1				1
14	3	YTI446-34920	TIRE		1		1				1
15	3	YTI446-34930	TUBE		1		1				1
16	1	YTI446-34950	TIRE ASSY(R), REAR		1		1				1
17	2	YTI446-34860	WHEEL		1		1				1
18	2	YTI446-34910	TIRE W/TUBE		1		1				1
19	3	YTI446-34920	TIRE		1		1				1
20	3	YTI446-34930	TUBE		1		1				1

N:Old $\xleftarrow[\text{No}]{\text{Yes}}$ New, Q:Old $\xleftarrow[\text{Yes}]{\text{No}}$ New, R:Old $\xleftarrow[\text{Yes}]{\text{Yes}}$ New, S:Old $\xleftarrow[\text{No}]{\text{No}}$ New, W:Add, Z:Discontinued, F:Interchangeable by set, K:Q'ty Change

(C)Copy Rights YANMAR CO.,LTD.

Fig.78. TURF-TIRES(4-WHEEL DRIVE:USA)

Fig. 78 TURF-TIRES (FRONT & REAR) [4-Wheel Drive]

U.S.A. only

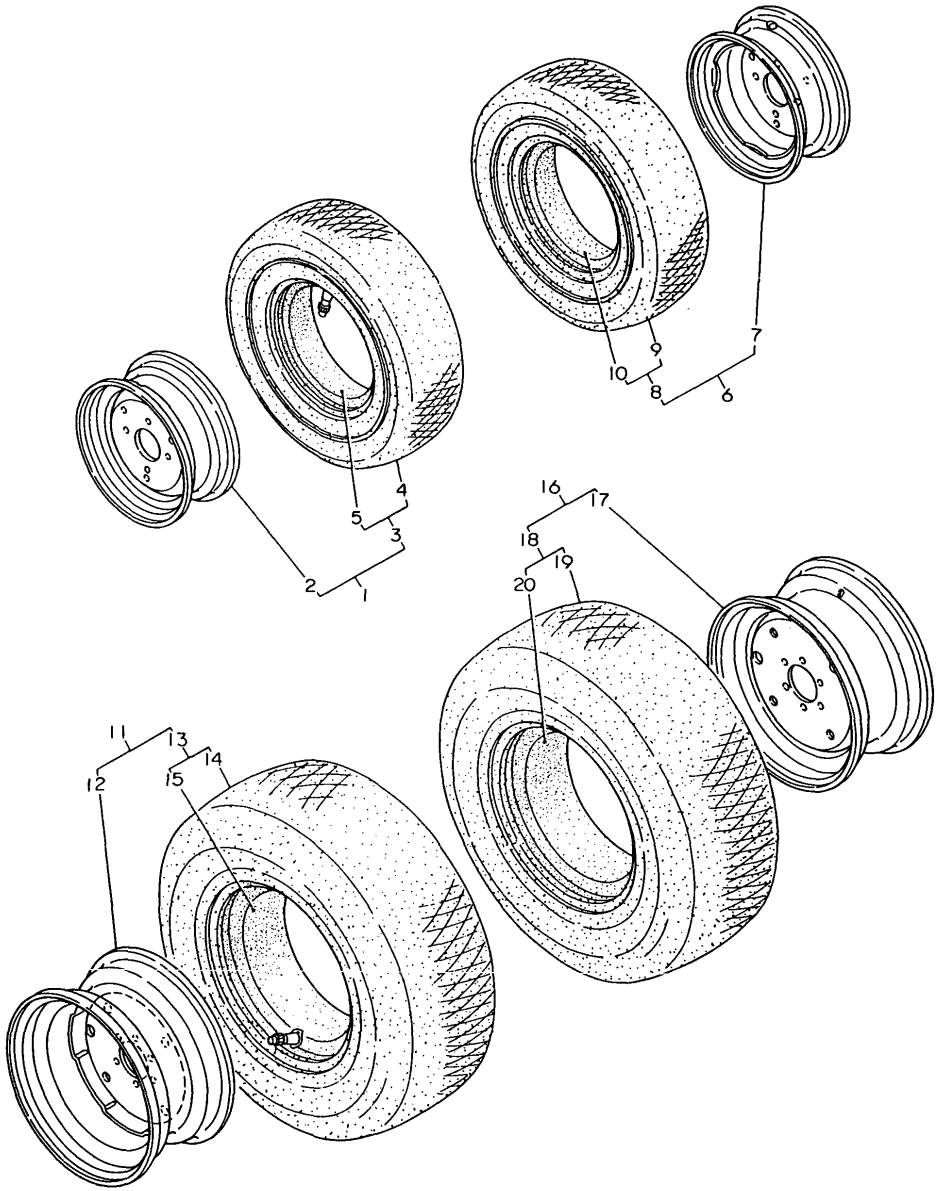

0CT10-G22801

78. TURF-TIRES(4-WHEEL DRIVE:USA)

(A)=YM186 (FLOOR
(B)=YM186D(FLOOR
(C)=YM186 (COLUM
(D)=YM186D(COLUM
(E)=
(F)=

REF.	LEV.	PARTS NO.	DESCRIPTION	Q'TY (A)	(B)	(C)	(D)	(E)	(F)	I	R
1	1	794447-14710-Q	TIRE ASSY (L), FRONT		1		1				
2	2	194447-14710-Q	WHEEL 5JAX12		1		1				
3-1	2	794340-11900	TIRE W/TUBE 6-12		1		1				
4-1	3	194340-11920	TIRE 6-12 TURF		1		1				
5	3	1A1050-34250	TUBE		1		1				
6	1	794447-14810-Q	TIRE ASSY (R), FRONT		1		1				
7	2	194447-14710-Q	WHEEL 5JAX12		1		1				
8	2	794340-11900	TIRE W/TUBE 6-12		1		1				
9	3	194340-11920	TIRE 6-12 TURF		1		1				
10	3	1A1050-34250	TUBE		1		1				
11	1	YTI447-34700	TURF-TIRE ASSY(L).R.		1		1				1
12	2	YTI446-34860	WHEEL		1		1				1
13	2	YTI447-34710	TURF-TIRE W/TUBE		1		1				1
14	3	YTI447-34720	TURF-TIRE		1		1				1
15	3	YTI447-34730	TUBE		1		1				1
16	1	YTI447-34750	TURF-TIRE ASSY(R),R.		1		1				1
17	2	YTI446-34860	WHEEL		1		1				1
18	2	YTI447-34710	TURF-TIRE W/TUBE		1		1				1
19	3	YTI447-34720	TURF-TIRE		1		1				1
20	3	YTI447-34730	TUBE		1		1				1

N:Old $\xleftarrow[\text{No}]{\text{Yes}}$ New, Q:Old $\xleftarrow[\text{Yes}]{\text{No}}$ New, R:Old $\xleftarrow[\text{Yes}]{\text{Yes}}$ New, S:Old $\xleftarrow[\text{No}]{\text{No}}$ New, W:Add, Z:Discontinued, F:Interchangeable by set, K:Q'ty Change

(C)Copy Rights YANMAR CO.,LTD.

Fig.79. HEATER & FRONT WEIGHT(USA ONLY

Fig. 79 HEATER & FRONT WEIGHT [Optional Parts]

U.S.A. only

ENGINE HEATER

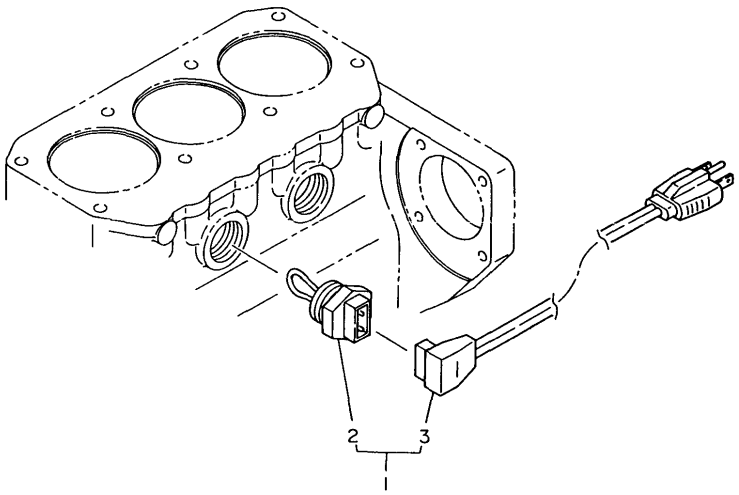

OIL HEATER

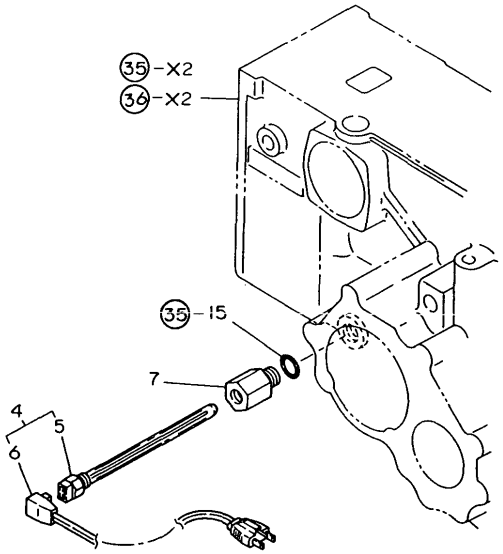

0CT10-G22801

79. HEATER & FRONT WEIGHT(USA ONLY

(A)=YM186 (FLOOR (D)=YM186D(COLUM
(B)=YM186D(FLOOR (E)=
(C)=YM186 (COLUM (F)=

REF.	LEV.	PARTS NO.	DESCRIPTION	Q'TY (A)	(B)	(C)	(D)	(E)	(F)	I	R
1	1	YTI446-59100	HEATER ASSY, ENGINE	1	1	1	1				1
2	2	YTI446-59110	HEATER,ENGINE	1	1	1	1				1
3	2	YTI446-59120	CORD	1	1	1	1				1
4	1	YTI446-59140	HEATER ASSY, OIL	1	1	1	1				1
5	2	YTI446-59150	HEATER, OIL	1	1	1	1				1
6	2	YTI446-59160	CORD	1	1	1	1				1
7	1	194446-24770-X	HOLDER	1	1	1	1			Z	1
	(A=T/# 00511)	(B=T/# 01233)	(C=T/# 20101)	(D=T/# 40218)							

N:Old $\xleftarrow[\text{No}]{\text{Yes}}$ New, Q:Old $\xleftarrow[\text{Yes}]{\text{No}}$ New, R:Old $\xleftarrow[\text{Yes}]{\text{Yes}}$ New, S:Old $\xleftarrow[\text{No}]{\text{No}}$ New, W:Add, Z:Discontinued, F:Interchangeable by set, K:Q'ty Change

(C)Copy Rights YANMAR CO.,LTD.

Fig.80. TIRES(2-WHEEL DRIVE:NEW ZEAL.)

Fig. 80 TIRES (2-Wheel Drive:NEW ZEALAND)

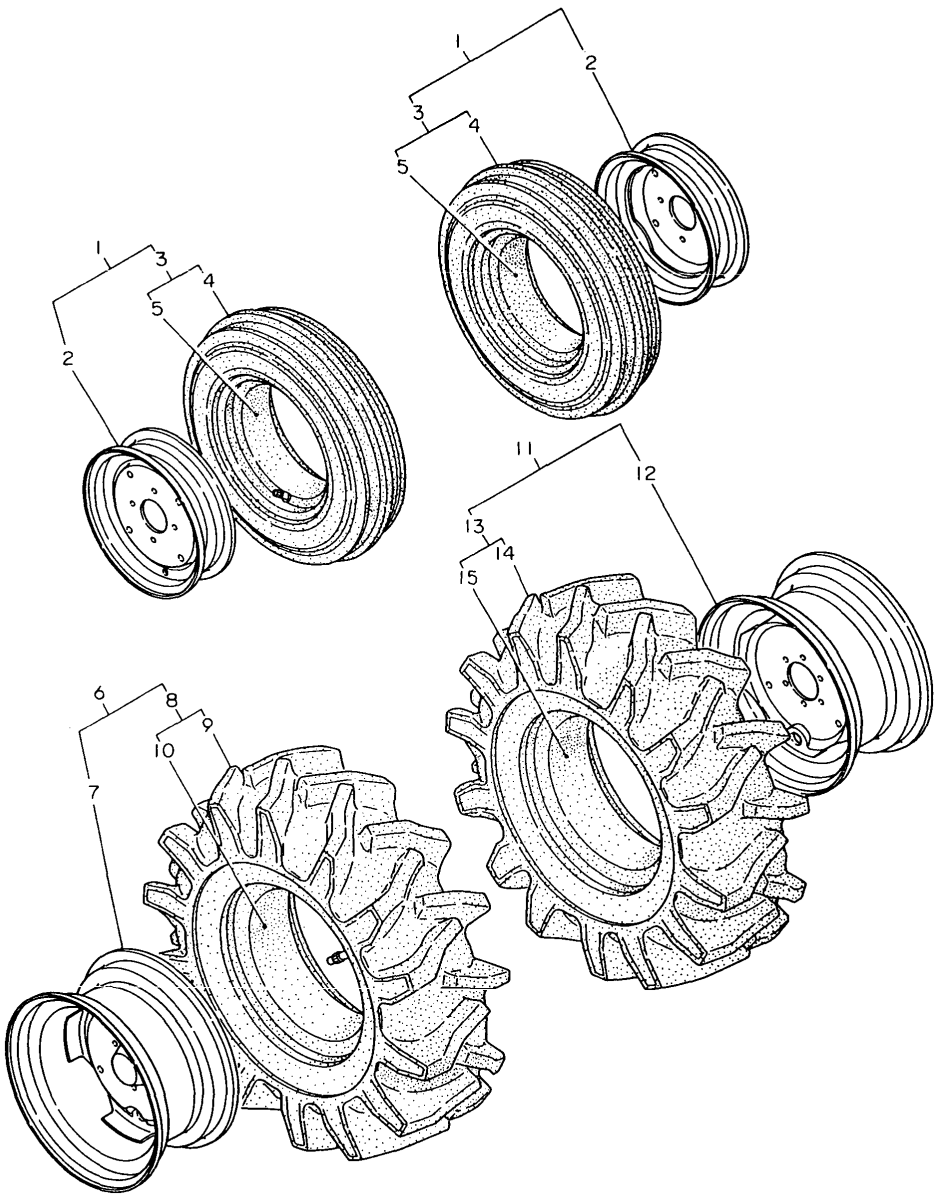

0CT10-G22801

80. TIRES(2-WHEEL DRIVE:NEW ZEAL.)

(A)=YM186 (FLOOR
(B)=YM186D(FLOOR
(C)=YM186 (COLUM
(D)=YM186D(COLUM
(E)=
(F)=

REF.	LEV.	PARTS NO.	DESCRIPTION	Q'TY (A)	(B)	(C)	(D)	(E)	(F)	I	R
1	1	794446-12900-Q	TIRE ASSY, FRONT	2		2					
2	2	194100-12911-Q	WHEEL DC3.00D-12	2		2					
3	2	194446-12950	TIRE W/TUBE 5 X12	2		2					
4	3	194446-12960	TIRE 5 X12	2		2					
5	3	194446-12970	TUBE	2		2					
6-1	1	794448-34700	TIRE ASSY(L), REAR	1		1					
6-2	1	794448-34701	TIRE ASSY(L), REAR	1		1					R
	(A=T/# 00840)		(C=T/# 20967)								
7	2	194446-34650-Q	WHEEL W 8X 16W	1		1					
8-1	2	194197-34900	TIRE 9.5-16 W/TUBE	1		1					
8-2	2	194446-34900	TIRE 9.5-16 W/TUBE	1		1					R
	(A=T/# 00840)		(C=T/# 20967)								
9-1	3	194197-34910	TIRE 9.5X 16	1		1					
9-2	3	194446-34910	TIRE 9.5-16	1		1					R
	(A=T/# 00840)		(C=T/# 20967)								
10-1	3	194197-34920	TUBE 9.5-16	1		1					
10-2	3	194446-34920	TUBE 9.5-16	1		1					R
	(A=T/# 00840)		(C=T/# 20967)								
11-1	1	794448-34800	TIRE ASSY(R), REAR	1		1					
11-2	1	794448-34801	TIRE ASSY(R), REAR	1		1					R
	(A=T/# 00840)		(C=T/# 20967)								
12	2	194446-34650-Q	WHEEL W 8X 16W	1		1					
13-1	2	194197-34900	TIRE 9.5-16 W/TUBE	1		1					
13-2	2	194446-34900	TIRE 9.5-16 W/TUBE	1		1					R
	(A=T/# 00840)		(C=T/# 20967)								
14-1	3	194197-34910	TIRE 9.5X 16	1		1					
14-2	3	194446-34910	TIRE 9.5-16	1		1					R
	(A=T/# 00840)		(C=T/# 20967)								
15-1	3	194197-34920	TUBE 9.5-16	1		1					
15-2	3	194446-34920	TUBE 9.5-16	1		1					R
	(A=T/# 00840)		(C=T/# 20967)								

N:Old $\frac{\text{Yes}}{\text{No}}$ New, Q:Old $\frac{\text{No}}{\text{Yes}}$ New, R:Old $\frac{\text{Yes}}{\text{Yes}}$ New, S:Old $\frac{\text{No}}{\text{No}}$ New, W:Add, Z:Discontinued, F:Interchangeable by set, K:Q'ty Change

(C)Copy Rights YANMAR CO.,LTD.

Fig.81. TURF-TIRES(2-WHEEL DRIVE:N.Z.)

Fig. 81 TURF-TIRES (2-Wheel Drive:NEW ZEALAND)

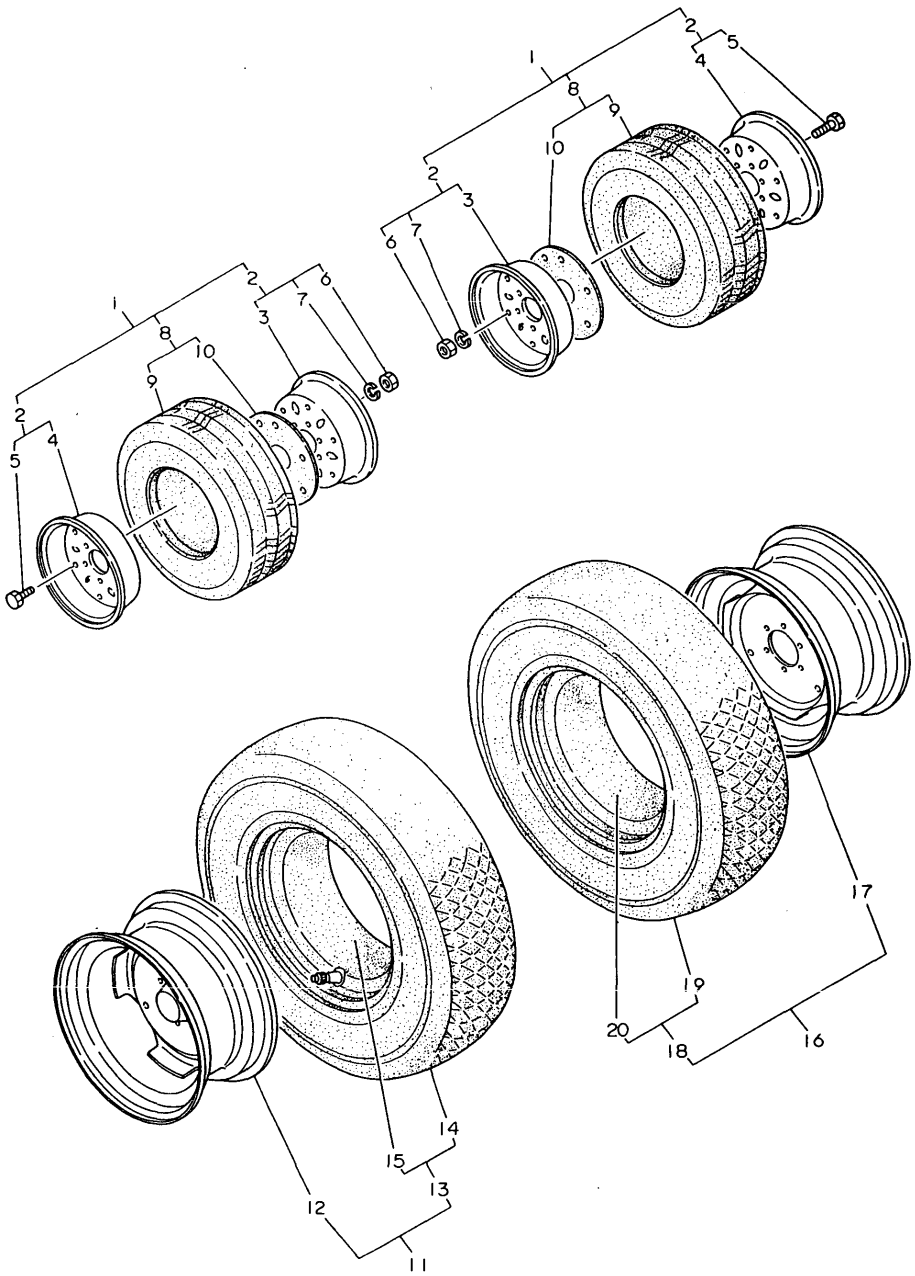

0CT10-G22801

81. TURF-TIRES(2-WHEEL DRIVE:N.Z.)

(A)=YM186 (FLOOR
(B)=YM186D(FLOOR
(C)=YM186 (COLUM
(D)=YM186D(COLUM
(E)=
(F)=

REF.	LEV.	PARTS NO.	DESCRIPTION	Q'TY (A)	(B)	(C)	(D)	(E)	(F)	I	R
1	1	794240-12900-Q	TURF-TIRE ASSY,FRONT	2		2					
2	2	194240-12910-Q	WHEEL ASSY	2		2					
3	3	194240-12920-Q	WHEEL (A)	2		2					
4	3	194240-12930-Q	WHEEL (B) W/VALVE	2		2					
5	3	26116-100202	BOLT M10X 20 PLATED	12		12					
6	3	26716-100002	NUT M10	12		12					
7	3	22217-100000	SPRING WASHER 10	12		12					
8	2	194240-12970	TIRE W/VALVE	2		2					
9	3	194240-12950	TIRE W/TUBE20X8.0-10	2		2					
10	3	194240-12960	GASKET	2		2					
11	1	794446-34500	TIRE ASSY (L), REAR	1		1					
12	2	194446-34650-Q	WHEEL W 8X 16W	1		1					
13	2	194446-34750	TIRE W/TUBE 9.5X16	1		1					
14	3	194446-34720	TIRE 9.5X 16	1		1					
15	3	194446-34730	TUBE	1		1					
16	1	794446-34600	TIRE ASSY (R), REAR	1		1					
17	2	194446-34650-Q	WHEEL W 8X 16W	1		1					
18	2	194446-34750	TIRE W/TUBE 9.5X16	1		1					
19	3	194446-34720	TIRE 9.5X 16	1		1					
20-1	3	194446-34730	TUBE	1		1					

N:Old $\xleftarrow[\text{No}]{\text{Yes}}$ New, Q:Old $\xleftarrow[\text{Yes}]{\text{No}}$ New, R:Old $\xleftarrow[\text{Yes}]{\text{Yes}}$ New, S:Old $\xleftarrow[\text{No}]{\text{No}}$ New, W:Add, Z:Discontinued, F:Interchangeable by set, K:Q'ty Change

(C)Copy Rights YANMAR CO.,LTD.

Fig.82. TIRES(4-WHEEL DRIVE:NEW ZEAL.)

Fig. 82 TIRES (4-Wheel Drive:NEW ZEALAND)

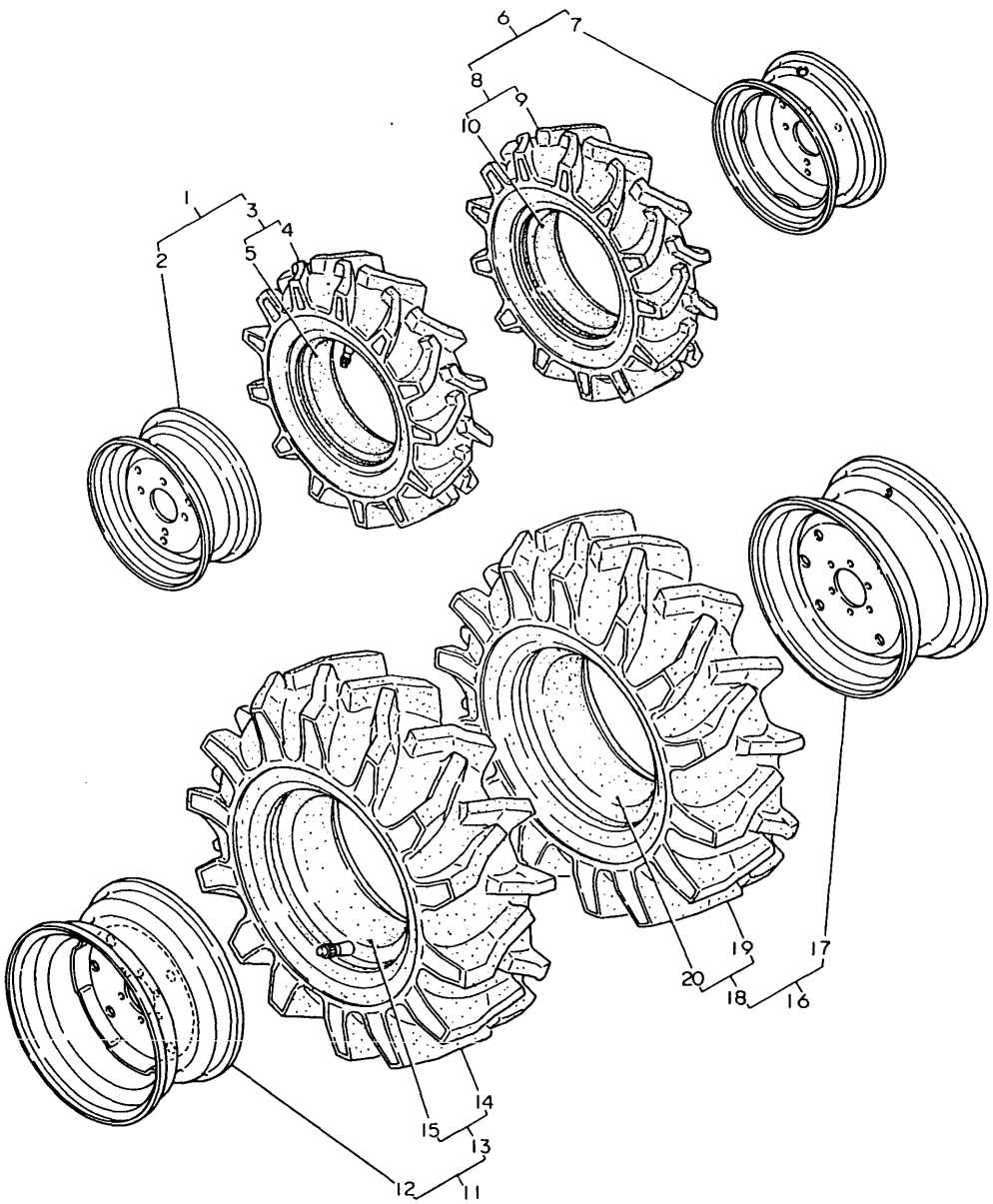

0CT10-G22801

82. TIRES(4-WHEEL DRIVE:NEW ZEAL.)

(A)=YM186 (FLOOR
(B)=YM186D(FLOOR
(C)=YM186 (COLUM
(D)=YM186D(COLUM
(E)=
(F)=

REF.	LEV.	PARTS NO.	DESCRIPTION	Q'TY (A)	(B)	(C)	(D)	(E)	(F)	I	R
1	1	794447-14700-Q	TIRE ASSY (L), FRONT		1		1				
2	2	194447-14710-Q	WHEEL 5JAX12		1		1				
3	2	194447-14800	TIRE W/TUBE		1		1				
4	3	194447-14810	TIRE 6-12		1		1				
5	3	194447-14820	TUBE		1		1				
6	1	794447-14800-Q	TIRE ASSY (R), FRONT		1		1				
7	2	194447-14710-Q	WHEEL 5JAX12		1		1				
8	2	194447-14800	TIRE W/TUBE		1		1				
9	3	194447-14810	TIRE 6-12		1		1				
10	3	194447-14820	TUBE		1		1				
11-1	1	794448-34700	TIRE ASSY(L), REAR		1		1				
11-2	1	794448-34701	TIRE ASSY(L), REAR		1		1				R
		(B=T/# 02093)	(D=T/# 42830)								
12	2	194446-34650-Q	WHEEL W 8X 16W		1		1				
13-1	2	194197-34900	TIRE 9.5-16 W/TUBE		1		1				
13-2	2	194446-34900	TIRE 9.5-16 W/TUBE		1		1				R
		(B=T/# 02093)	(D=T/# 42830)								
14-1	3	194197-34910	TIRE 9.5X 16		1		1				
14-2	3	194446-34910	TIRE 9.5-16		1		1				R
		(B=T/# 02093)	(D=T/# 42830)								
15-1	3	194197-34920	TUBE 9.5-16		1		1				
15-2	3	194446-34920	TUBE 9.5-16		1		1				R
		(B=T/# 02093)	(D=T/# 42830)								
16-1	1	794448-34800	TIRE ASSY(R), REAR		1		1				
16-2	1	794448-34801	TIRE ASSY(R), REAR		1		1				R
		(B=T/# 02093)	(D=T/# 42830)								
17	2	194446-34650-Q	WHEEL W 8X 16W		1		1				
18-1	2	194197-34900	TIRE 9.5-16 W/TUBE		1		1				
18-2	2	194446-34900	TIRE 9.5-16 W/TUBE		1		1				R
		(B=T/# 02093)	(D=T/# 42830)								
19-1	3	194197-34910	TIRE 9.5X 16		1		1				
19-2	3	194446-34910	TIRE 9.5-16		1		1				R
		(B=T/# 02093)	(D=T/# 42830)								
20-1	3	194197-34920	TUBE 9.5-16		1		1				
20-2	3	194446-34920	TUBE 9.5-16		1		1				R
		(B=T/# 02093)	(D=T/# 42830)								

N:Old $\xleftrightarrow[\text{No}]{\text{Yes}}$ New, Q:Old $\xleftrightarrow[\text{Yes}]{\text{No}}$ New, R:Old $\xleftrightarrow[\text{Yes}]{\text{Yes}}$ New, S:Old $\xleftrightarrow[\text{No}]{\text{No}}$ New, W:Add, Z:Discontinued, F:Interchangeable by set, K:Q'ty Change

(C)Copy Rights YANMAR CO.,LTD.

Fig.83. TURF-TIRES(4-WHEEL DRIVE:N.Z.)

Fig. 83 TURF-TIRES (4-Wheel Drive:NEW ZEALAND)

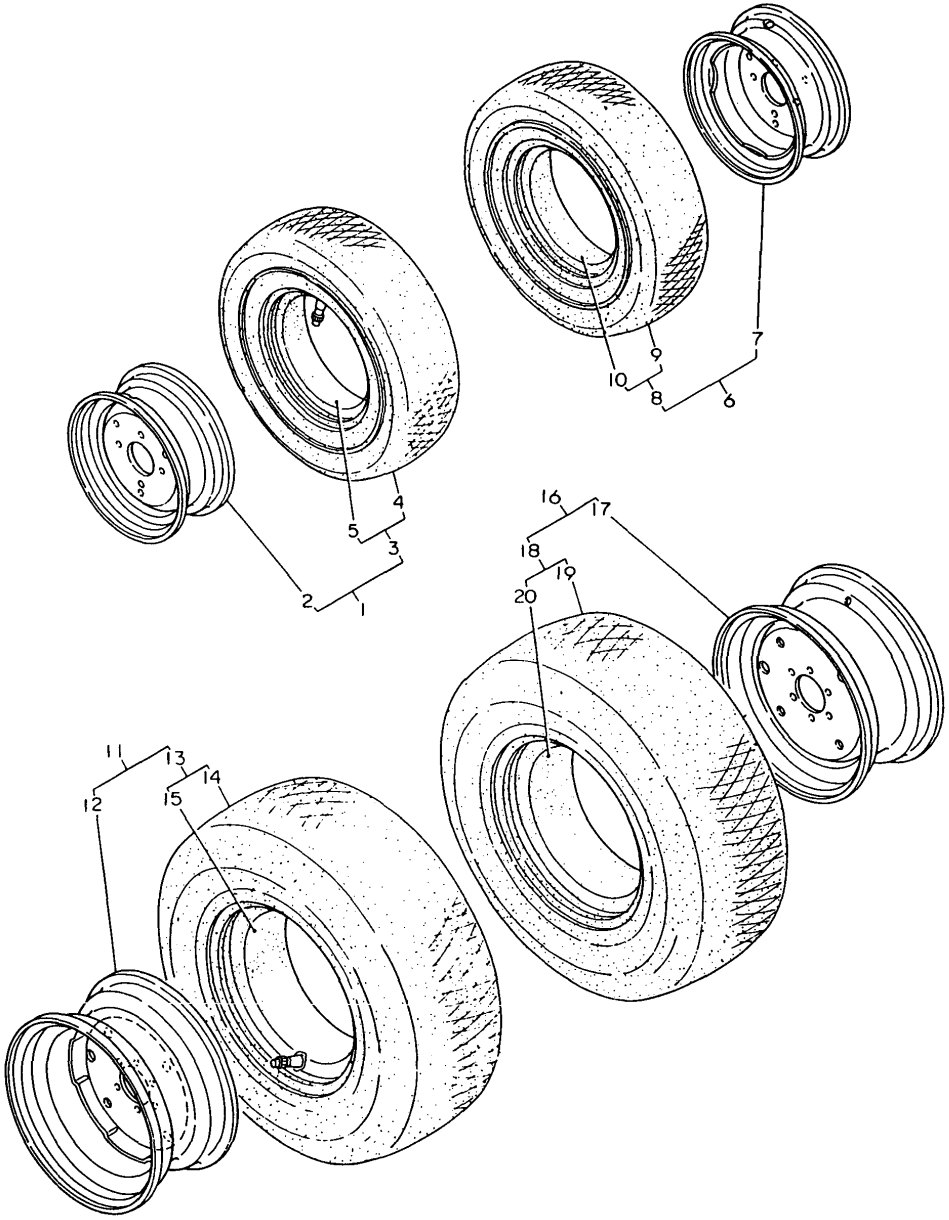

0CT10-G22801

83. TURF-TIRES(4-WHEEL DRIVE:N.Z.)

(A)=YM186 (FLOOR
(B)=YM186D(FLOOR
(C)=YM186 (COLUM
(D)=YM186D(COLUM
(E)=
(F)=

REF.	LEV.	PARTS NO.	DESCRIPTION	Q'TY (A)	(B)	(C)	(D)	(E)	(F)	I	R
1	1	794447-14710-Q	TIRE ASSY (L), FRONT		1		1				
2	2	194447-14710-Q	WHEEL 5JAX12		1		1				
3	2	794340-11900	TIRE W/TUBE 6-12		1		1				
4	3	194340-11920	TIRE 6-12 TURF		1		1				
5	3	1A1050-34250	TUBE		1		1				
6	1	794447-14810-Q	TIRE ASSY (R), FRONT		1		1				
7	2	194447-14710-Q	WHEEL 5JAX12		1		1				
8	2	794340-11900	TIRE W/TUBE 6-12		1		1				
9	3	194340-11920	TIRE 6-12 TURF		1		1				
10	3	1A1050-34250	TUBE		1		1				
11	1	794446-34500	TIRE ASSY (L), REAR		1		1				
12	2	194446-34650-Q	WHEEL W 8X 16W		1		1				
13	2	194446-34750	TIRE W/TUBE 9.5X16		1		1				
14	3	194446-34720	TIRE 9.5X 16		1		1				
15	3	194446-34730	TUBE		1		1				
16	1	794446-34600	TIRE ASSY (R), REAR		1		1				
17	2	194446-34650-Q	WHEEL W 8X 16W		1		1				
18	2	194446-34750	TIRE W/TUBE 9.5X16		1		1				
19	3	194446-34720	TIRE 9.5X 16		1		1				
20	3	194446-34730	TUBE		1		1				

N:Old $\xleftrightarrow[\text{No}]{\text{Yes}}$ New, Q:Old $\xleftrightarrow[\text{Yes}]{\text{No}}$ New, R:Old $\xleftrightarrow[\text{Yes}]{\text{Yes}}$ New, S:Old $\xleftrightarrow[\text{No}]{\text{No}}$ New, W:Add, Z:Discontinued, F:Interchangeable by set, K:Q'ty Change

(C)Copy Rights YANMAR CO.,LTD.

Fig.84. TIRES (2-WHEEL DRIVE:FRANCE)

Fig. 84 TIRES (2-Wheel Drive:FRANCE)

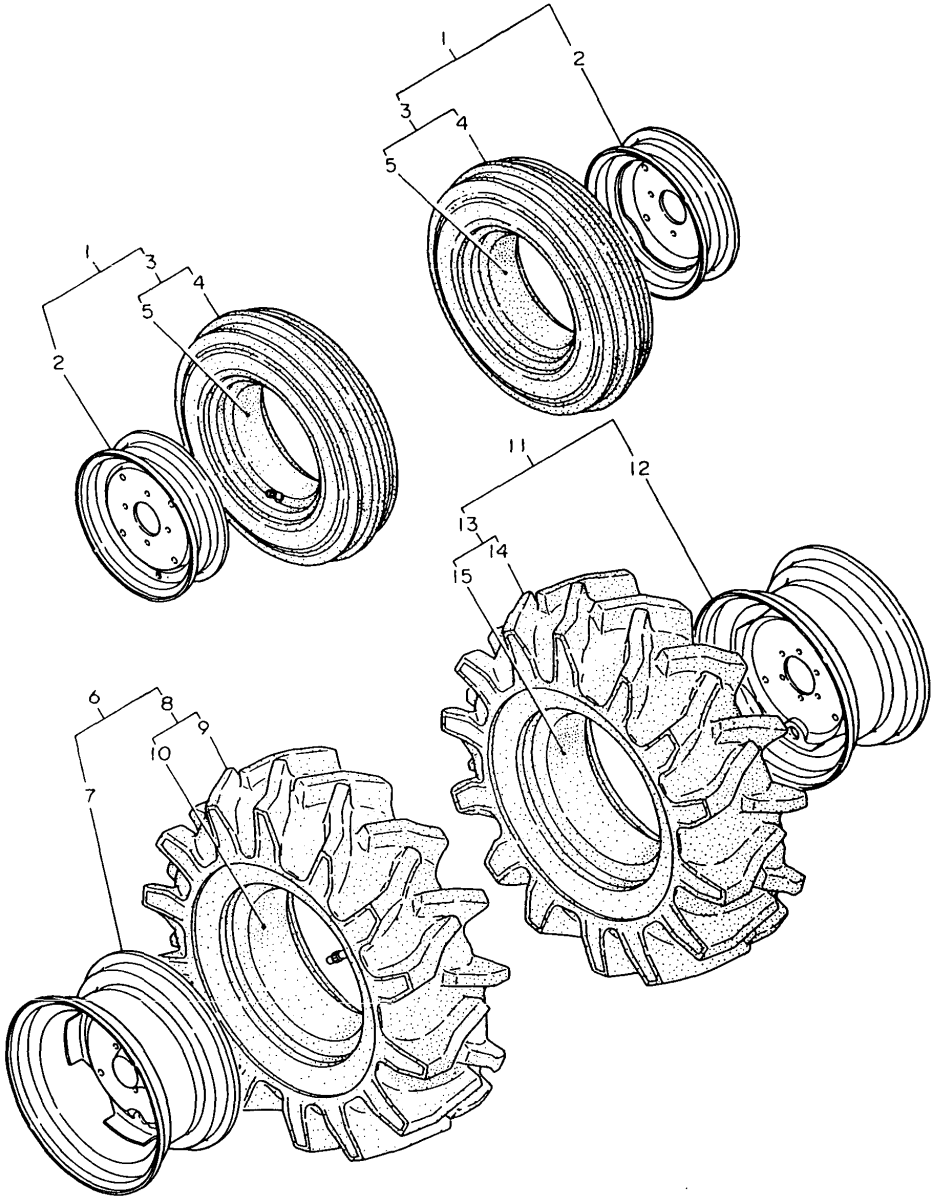

0CT10-G22801

84. TIRES (2-WHEEL DRIVE:FRANCE)

(A)=YM186 (FLOOR
(B)=YM186D(FLOOR
(C)=YM186 (COLUM
(D)=YM186D(COLUM
(E)=
(F)=

REF.	LEV.	PARTS NO.	DESCRIPTION	Q'TY (A)	(B)	(C)	(D)	(E)	(F)	I	R
1	1	794446-12900-Q	TIRE ASSY, FRONT	2		2					
2	2	194100-12911	WHEEL DC3.00-12	2		2					
3	2	194446-12950	TIRE W/TUBE 5 X12	2		2					
4	3	194446-12960	TIRE 5 X12	2		2					
5	3	194446-12970	TUBE	2		2					
6	1	794448-34700	TIRE ASSY (L), REAR	1		1					
7	2	194446-34650-Q	WHEEL W 8X 16W	1		1					
8	2	194197-34900	TIRE 9.5-16 W/TUBE	1		1					
9	3	194197-34910	TIRE 9.5X 16	1		1					
10	3	194197-34920	TUBE 9.5-16	1		1					
11	1	794448-34800	TIRE ASSY (R), REAR	1		1					
12	2	194446-34650-Q	WHEEL W 8X 16W	1		1					
13	2	194197-34900	TIRE 9.5-16 W/TUBE	1		1					
14	3	194197-34910	TIRE 9.5X 16	1		1					
15	3	194197-34920	TUBE 9.5-16	1		1					

N:Old $\frac{\text{Yes}}{\text{No}}$ New, Q:Old $\frac{\text{No}}{\text{Yes}}$ New, R:Old $\frac{\text{Yes}}{\text{Yes}}$ New, S:Old $\frac{\text{No}}{\text{No}}$ New, W:Add, Z:Discontinued, F:Interchangeable by set, K:Q'ty Change

(C)Copy Rights YANMAR CO.,LTD.

Fig.85. TURF-TIRES(2-WHEEL DRIVE:FR.)

Fig. 85 TURF-TIRES (2-Wheel Drive:FRANCE)

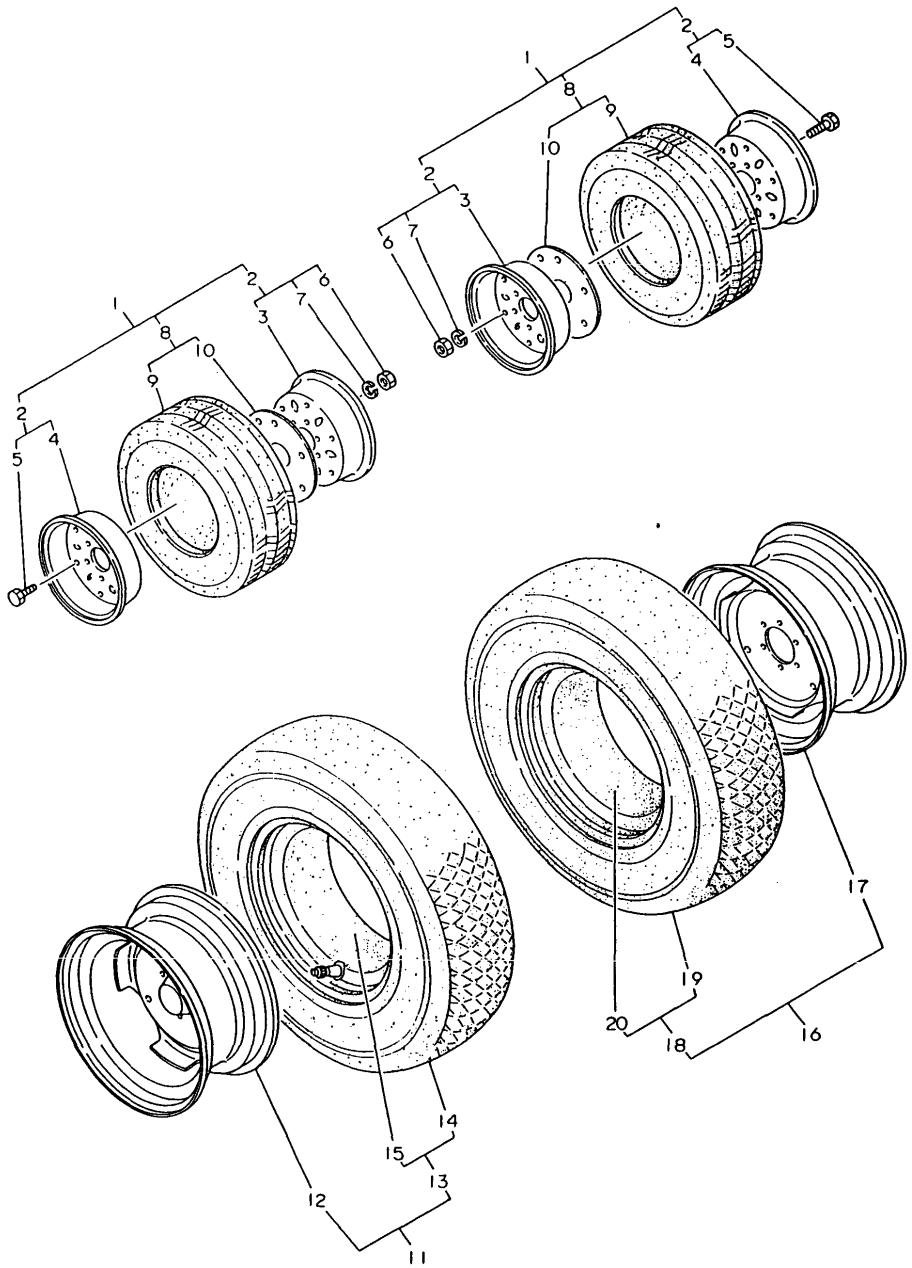

0CT10-G22801

85. TURF-TIRES(2-WHEEL DRIVE:FR.)

(A)=YM186 (FLOOR
(B)=YM186D(FLOOR
(C)=YM186 (COLUM
(D)=YM186D(COLUM
(E)=
(F)=

REF.	LEV.	PARTS NO.	DESCRIPTION	Q'TY (A)	(B)	(C)	(D)	(E)	(F)	I	R
1	1	794240-12900-Q	TURF-TIRE ASSY,FRONT	2		2					
2	2	194240-12910-Q	WHEEL ASSY	2		2					
3	3	194240-12920-Q	WHEEL (A)	2		2					
4	3	194240-12930-Q	WHEEL (B) W/VALVE	2		2					
5	3	26116-100202	BOLT M10X 20 PLATED	12		12					
6	3	26716-100002	NUT M10	12		12					
7	3	22217-100000	SPRING WASHER 10	12		12					
8	2	194240-12970	TIRE W/VALVE	2		2					
9	3	194240-12950	TIRE W/TUBE20X8.0-10	2		2					
10	3	194240-12960	GASKET	2		2					
11	1	794446-34500	TIRE ASSY (L), REAR	1		1					
12	2	194446-34650-Q	WHEEL W 8X 16W	1		1					
13	2	194446-34750	TIRE W/TUBE 9.5X16	1		1					
14	3	194446-34720	TIRE 9.5X 16	1		1					
15	3	194446-34730	TUBE	1		1					
16	1	794446-34600	TIRE ASSY (R), REAR	1		1					
17	2	194446-34650-Q	WHEEL W 8X 16W	1		1					
18	2	194446-34750	TIRE W/TUBE 9.5X16	1		1					
19	3	194446-34720	TIRE 9.5X 16	1		1					
20	3	194446-34730	TUBE	1		1					

N:Old $\xleftarrow[\text{No}]{\text{Yes}}$ New, Q:Old $\xleftarrow[\text{Yes}]{\text{No}}$ New, R:Old $\xleftarrow[\text{Yes}]{\text{Yes}}$ New, S:Old $\xleftarrow[\text{No}]{\text{No}}$ New, W:Add, Z:Discontinued, F:Interchangeable by set, K:Q'ty Change

(C)Copy Rights YANMAR CO.,LTD.

Fig.86. TIRES (4-WHEEL DRIVE:FRANCE)

Fig. 86 TIRES (4-Wheel Drive:FRANCE)

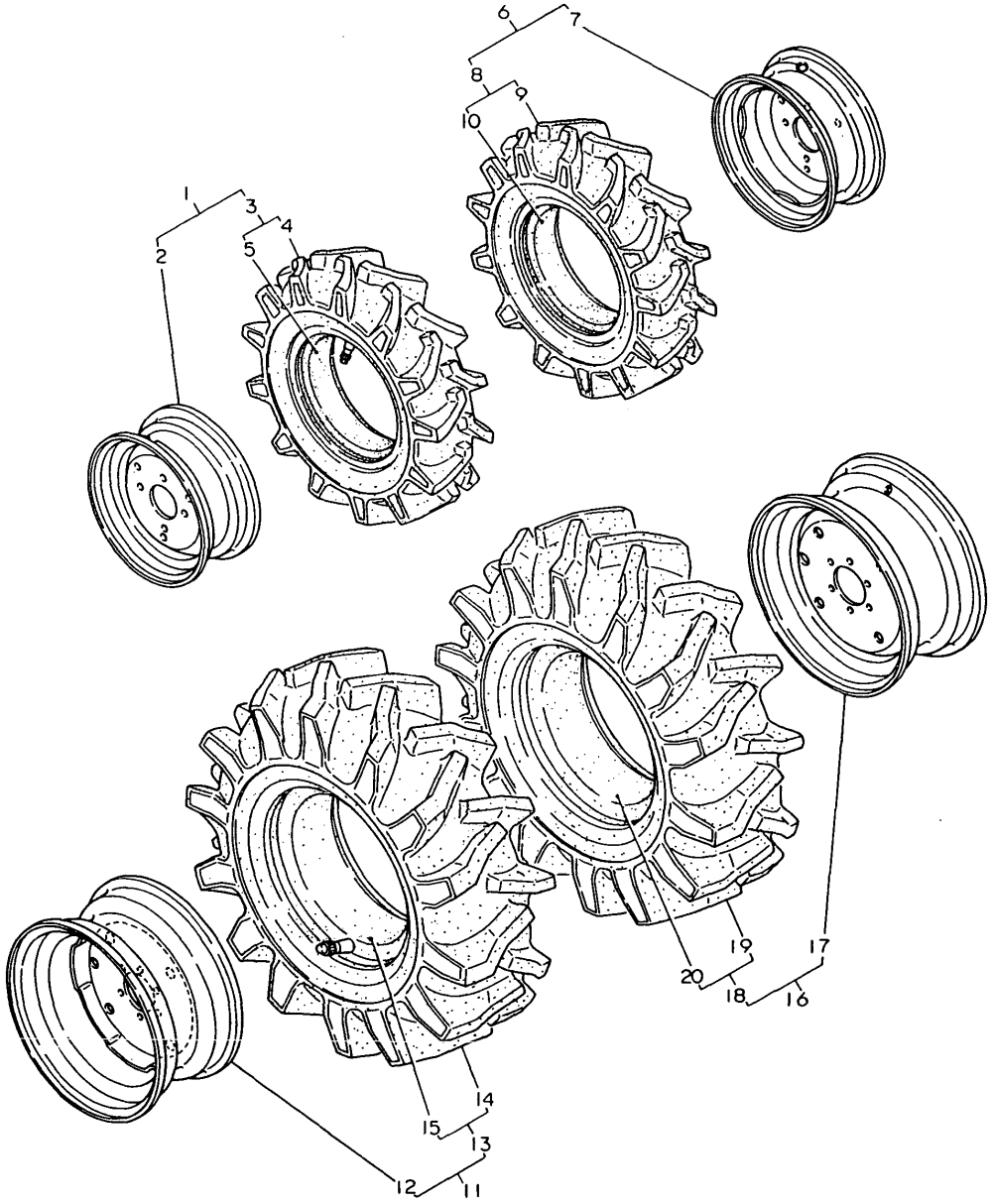

0CT10-G22801

86. TIRES (4-WHEEL DRIVE:FRANCE)

(A)=YM186 (FLOOR
(B)=YM186D(FLOOR
(C)=YM186 (COLUM
(D)=YM186D(COLUM
(E)=
(F)=

REF.	LEV.	PARTS NO.	DESCRIPTION	Q'TY (A)	(B)	(C)	(D)	(E)	(F)	I	R
1	1	794447-14700-Q	TIRE ASSY (L), FRONT		1		1				
2	2	194447-14710-Q	WHEEL 5JAX12		1		1				
3	2	194447-14800	TIRE W/TUBE		1		1				
4	3	194447-14810	TIRE 6-12		1		1				
5	3	194447-14820	TUBE		1		1				
6	1	794447-14800-Q	TIRE ASSY (R), FRONT		1		1				
7	2	194447-14710-Q	WHEEL 5JAX12		1		1				
8	2	194447-14800	TIRE W/TUBE		1		1				
9	3	194447-14810	TIRE 6-12		1		1				
10	3	194447-14820	TUBE		1		1				
11	1	794448-34700	TIRE ASSY (L), REAR		1		1				
11-1	1	794448-34701	TIRE ASSY(L), REAR		1		1			N	
		(B=T/# 02093)	(D=T/# 42830)								
12	2	194446-34650-Q	WHEEL W 8X 16W		1		1				
13	2	194197-34900	TIRE 9.5-16 W/TUBE		1		1				
13-1	2	194446-34900	TIRE 9.5-16 W/TUBE		1		1			N	
		(B=T/# 02093)	(D=T/# 42830)								
14	3	194197-34910	TIRE 9.5X 16		1		1				
14-1	3	194446-34910	TIRE 9.5-16		1		1			N	
		(B=T/# 02093)	(D=T/# 42830)								
15	3	194197-34920	TUBE 9.5-16		1		1				
15-1	3	194446-34920	TUBE 9.5-16		1		1			N	
		(B=T/# 02093)	(D=T/# 42830)								
16	1	794448-34800	TIRE ASSY (R), REAR		1		1				
16-1	1	794448-34801	TIRE ASSY(R), REAR		1		1			N	
		(B=T/# 02093)	(D=T/# 42830)								
17	2	194446-34650-Q	WHEEL W 8X 16W		1		1				
18	2	194197-34900	TIRE 9.5-16 W/TUBE		1		1				
18-1	2	194446-34900	TIRE 9.5-16 W/TUBE		1		1			N	
		(B=T/# 02093)	(D=T/# 42830)								
19	3	194197-34910	TIRE 9.5X 16		1		1				
19-1	3	194446-34910	TIRE 9.5-16		1		1			N	
		(B=T/# 02093)	(D=T/# 42830)								
20	3	194197-34920	TUBE 9.5-16		1		1				
20-1	3	194446-34920	TUBE 9.5-16		1		1			N	
		(B=T/# 02093)	(D=T/# 42830)								

N:Old $\frac{\text{Yes}}{\text{No}}$ New, Q:Old $\frac{\text{No}}{\text{Yes}}$ New, R:Old $\frac{\text{Yes}}{\text{Yes}}$ New, S:Old $\frac{\text{No}}{\text{No}}$ New, W:Add, Z:Discontinued, F:Interchangeable by set, K:Q'ty Change

(C)Copy Rights YANMAR CO.,LTD.

Fig.87. TURF-TIRES(4-WHEEL DRIVE:FR.)

Fig. 87 TURF-TIRES (4-Wheel Drive:FRANCE)

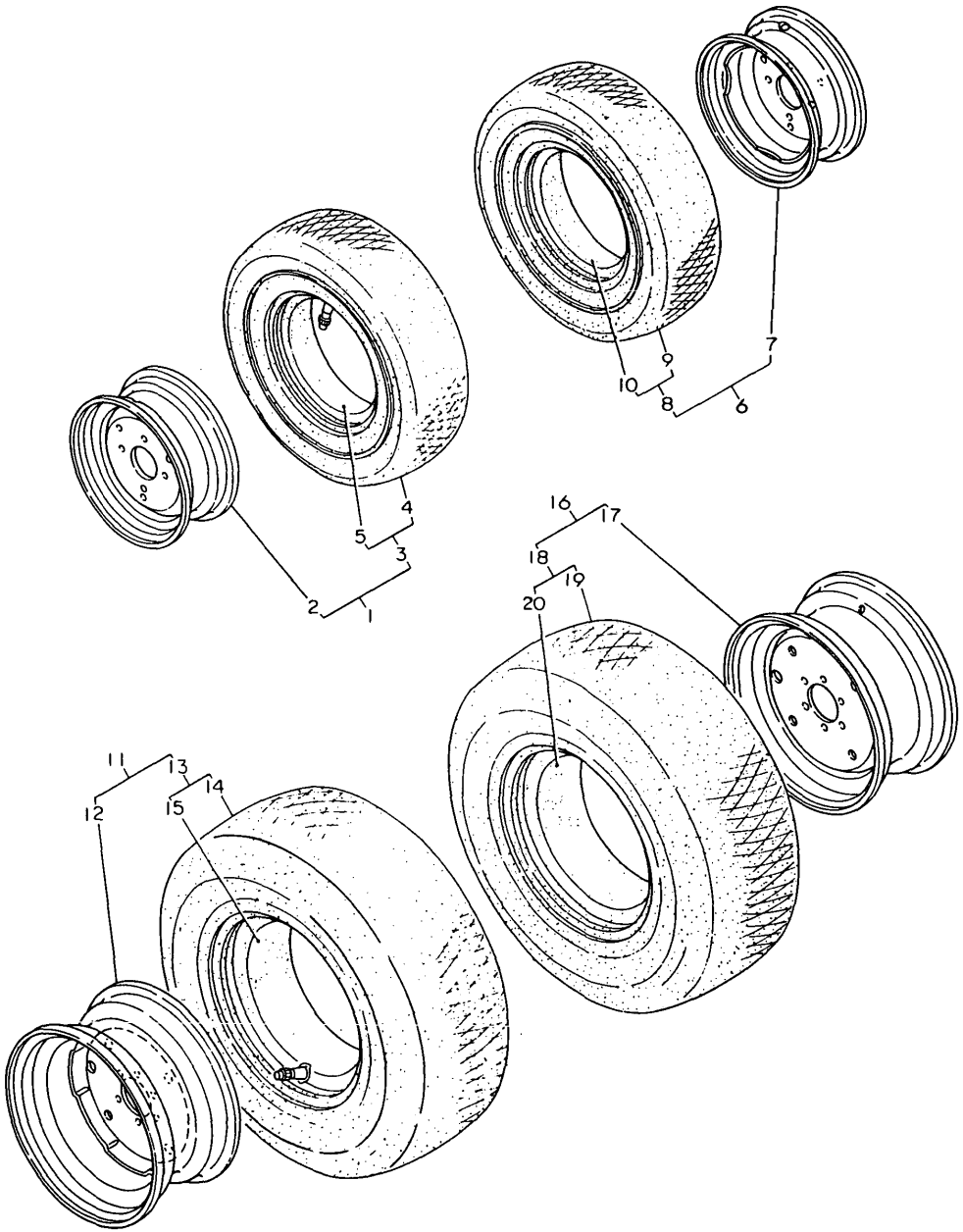

0CT10-G22801

87. TURF-TIRES(4-WHEEL DRIVE:FR.)

(A)=YM186 (FLOOR
(B)=YM186D(FLOOR
(C)=YM186 (COLUM
(D)=YM186D(COLUM
(E)=
(F)=

REF.	LEV.	PARTS NO.	DESCRIPTION	Q'TY (A)	(B)	(C)	(D)	(E)	(F)	I	R
1	1	794447-14710-Q	TIRE ASSY (L), FRONT		1		1				
2	2	194447-14710-Q	WHEEL 5JAX12		1		1				
3	2	794340-11900	TIRE W/TUBE 6-12		1		1				
4	3	194340-11920	TIRE 6-12 TURF		1		1				
5	3	1A1050-34250	TUBE		1		1				
6	1	794447-14810-Q	TIRE ASSY (R), FRONT		1		1				
7	2	194447-14710-Q	WHEEL 5JAX12		1		1				
8	2	794340-11900	TIRE W/TUBE 6-12		1		1				
9	3	194340-11920	TIRE 6-12 TURF		1		1				
10	3	1A1050-34250	TUBE		1		1				
11	1	794446-34500	TIRE ASSY (L), REAR		1		1				
12	2	194446-34650-Q	WHEEL W 8X 16W		1		1				
13	2	194446-34750	TIRE W/TUBE 9.5X16		1		1				
14	3	194446-34720	TIRE 9.5X 16		1		1				
15	3	194446-34730	TUBE		1		1				
16	1	794446-34600	TIRE ASSY (R), REAR		1		1				
17	2	194446-34650-Q	WHEEL W 8X 16W		1		1				
18	2	194446-34750	TIRE W/TUBE 9.5X16		1		1				
19	3	194446-34720	TIRE 9.5X 16		1		1				
20	3	194446-34730	TUBE		1		1				

N:Old $\overset{\text{Yes}}{\underset{\text{No}}{\leftrightarrows}}$ New, Q:Old $\overset{\text{No}}{\underset{\text{Yes}}{\leftrightarrows}}$ New, R:Old $\overset{\text{Yes}}{\underset{\text{Yes}}{\leftrightarrows}}$ New, S:Old $\overset{\text{No}}{\underset{\text{No}}{\leftrightarrows}}$ New, W:Add, Z:Discontinued, F:Interchangeable by set, K:Q'ty Change

(C)Copy Rights YANMAR CO.,LTD.

Fig.88. REAR WHEEL & FRONT WEIGHT

Fig. 88 REAR WHEEL WEIGHT & FRONT WEIGHT [Optional Parts]

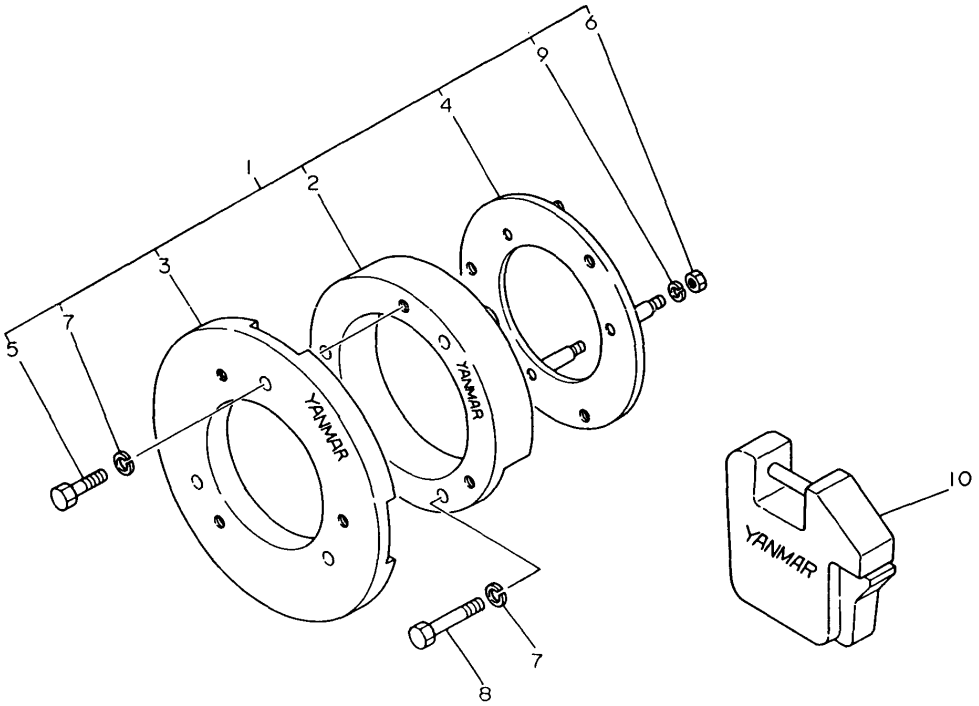

0CT10-G22801

88. REAR WHEEL & FRONT WEIGHT

(A)=YM186 (FLOOR (D)=YM186D(COLUM
(B)=YM186D(FLOOR (E)=
(C)=YM186 (COLUM (F)=

REF.	LEV.	PARTS NO.	DESCRIPTION	Q'TY (A)	(B)	(C)	(D)	(E)	(F)	I	R
1	1	794446-81200	WEIGHT W/FITTINGS	2	2	2	2				1
2	2	194080-81230-R	WEIGHT 20KGS. REAR	2	2	2	2				
3	2	194080-81212-R	WEIGHT 25KGS. REAR	2	2	2	2				
4	2	194446-81240	FITTINGS, REAR	2	2	2	2				
5	2	26116-160652	BOLT M16X 65 PLATED	6	6	6	6				
5-1	2	26116-160602	BOLT M16X 60 PLATED	6	6	6	6			N	
	(A=*)	(B=*)	(C=*) (D=*)								
6	2	26716-140002	NUT M14	8	8	8	8				
6-1	2	26716-140002	NUT M14	6	6	6	6			K	
	(A=*1982.12)	(B=*1982.12)	(C=*1982.12) (D=*1982.12)								
7	2	22217-160000	SPRING WASHER 16	12	12	12	12				
8	2	26116-161002	BOLT M16X100 PLATED	6	6	6	6				
8-1	2	26116-161102	BOLT M16X110 PLATED	6	6	6	6			N	
	(A=T/# 00730)	(B=T/# 01607)	(C=T/# 20858) (D=T/# 41928)								
9	2	22217-140000	SPRING WASHER 14	8	8	8	8				
9-1	2	22217-140000	SPRING WASHER 14	6	6	6	6			K	
	(A=*1982.12)	(B=*1982.12)	(C=*1982.12) (D=*1982.12)								
10	1	194080-81111-R	WEIGHT 20KGS. FRONT	3	3	3	3				

N:Old $\frac{\text{Yes}}{\text{No}}$ New, Q:Old $\frac{\text{No}}{\text{Yes}}$ New, R:Old $\frac{\text{Yes}}{\text{Yes}}$ New, S:Old $\frac{\text{No}}{\text{No}}$ New, W:Add, Z:Discontinued, F:Interchangeable by set, K:Q'ty Change

(C)Copy Rights YANMAR CO.,LTD.

Fig.89. WORKING LIGHT (OPTIONAL PARTS)

Fig. 89 WORKING LIGHT [Optional Parts]

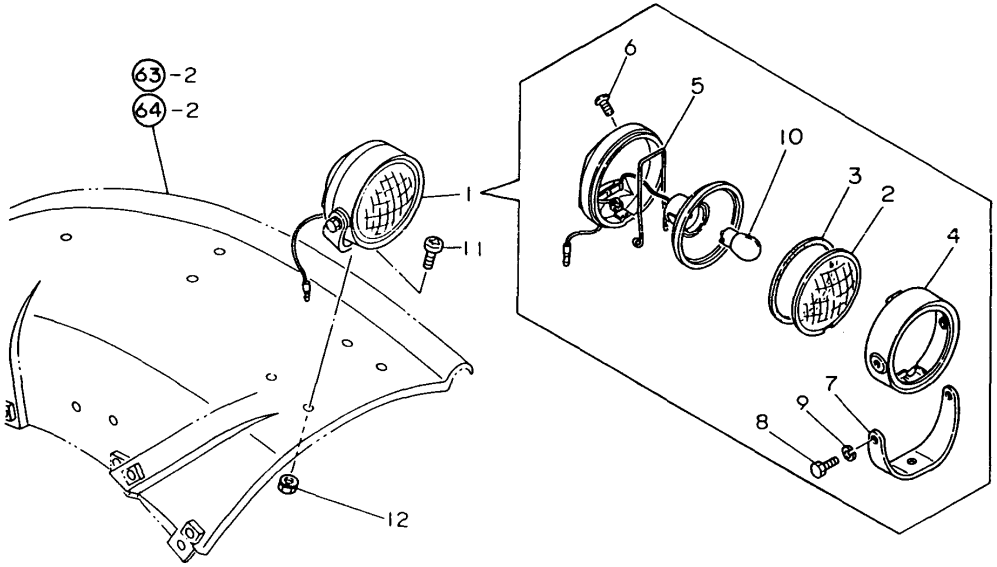

0CT10-G22801

89. WORKING LIGHT (OPTIONAL PARTS)

(A)=YM186 (FLOOR
(B)=YM186D(FLOOR
(C)=YM186 (COLUM
(D)=YM186D(COLUM
(E)=
(F)=

REF.	LEV.	PARTS NO.	DESCRIPTION	Q'TY (A)	(B)	(C)	(D)	(E)	(F)	I	R
1	1	794081-54101	LAMP ASSY, WORKING	1	1	1	1				
2	2	194081-54110	LENS	1	1	1	1				
3	2	194081-54120	GASKET	1	1	1	1				
4	2	194081-54131	RIM	1	1	1	1				
5	2	194081-54151	SPRING	3	3	3	3				
6	2	194081-54210	SCREW	1	1	1	1				
7	2	194081-54221	STAY	1	1	1	1				
8	2	194081-54230	BOLT M6X 12	2	2	2	2				
9	2	194081-54240	SPRING WASHER 6	2	2	2	2				
10	2	194081-55820	BULB 12V-20W	1	1	1	1				
11	1	26587-080162	SCREW M 8X 16	1	1	1	1				
12	1	194990-22050	NUT W/WASHER 8	1	1	1	1				

N:Old $\overset{\text{Yes}}{\underset{\text{No}}{\leftrightarrows}}$ New, Q:Old $\overset{\text{No}}{\underset{\text{Yes}}{\leftrightarrows}}$ New, R:Old $\overset{\text{Yes}}{\underset{\text{Yes}}{\leftrightarrows}}$ New, S:Old $\overset{\text{No}}{\underset{\text{No}}{\leftrightarrows}}$ New, W:Add, Z:Discontinued, F:Interchangeable by set, K:Q'ty Change

(C)Copy Rights YANMAR CO.,LTD.

Fig.90. TOOLS (OPTIONAL PARTS)

Fig. 90 TOOLS [Optional Parts]

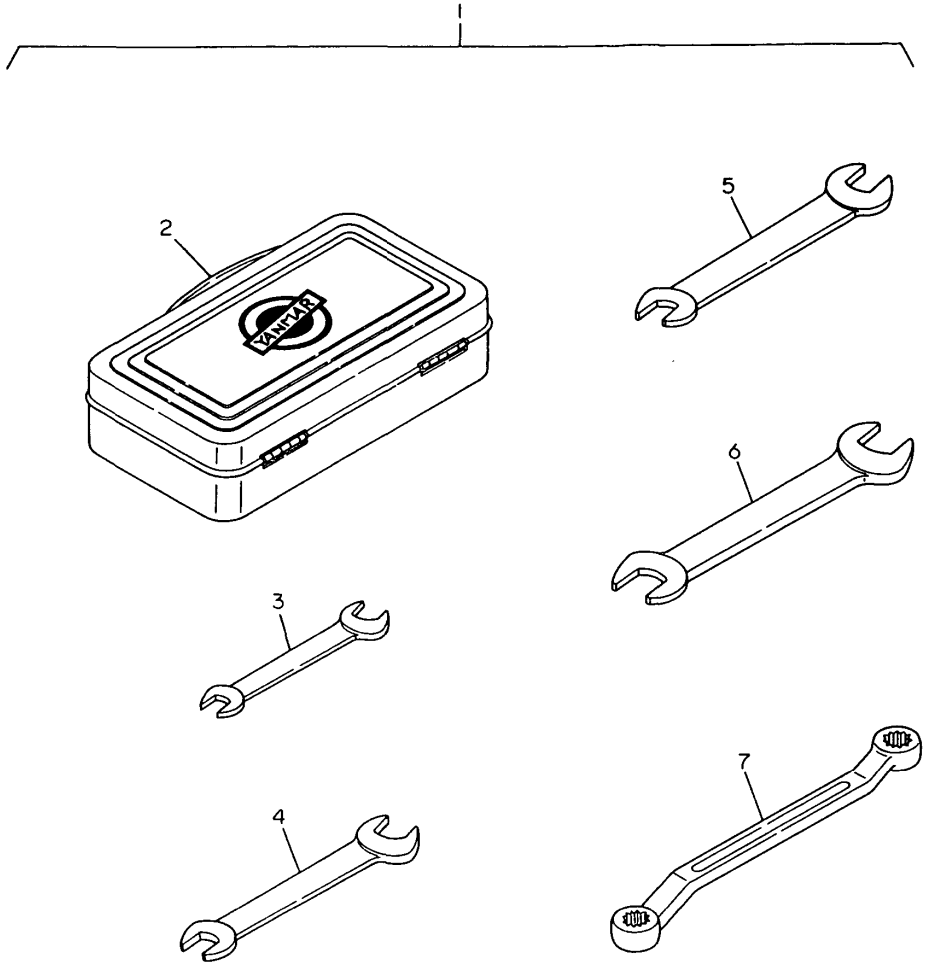

0CT10-G22801 90. TOOLS (OPTIONAL PARTS)

(A)=YM186 (FLOOR (D)=YM186D(COLUM
(B)=YM186D(FLOOR (E)=
(C)=YM186 (COLUM (F)=

REF.	LEV.	PARTS NO.	DESCRIPTION	Q'TY (A)	(B)	(C)	(D)	(E)	(F)	I	R
1	1	794446-82110-R	TOOL ASSY	1	1	1	1				
1-1	1	794446-82111	TOOL ASSY	1	1	1	1			S	
	(A=*1982.12)	(B=*1982.12)	(C=*1982.12) (D=*1982.12)								
2	2	194446-82110	BOX, TOOL	1	1	1	1				
3	2	28110-080100	WRENCH 8X10	1	1	1	1				
4	2	28110-100130	WRENCH 10X13	1	1	1	1				
4-1	2	28110-120140	WRENCH 12X14	1	1	1	1			S	
	(A=*1982.12)	(B=*1982.12)	(C=*1982.12) (D=*1982.12)								
5	2	28110-170190	WRENCH 17X19	1	1	1	1				
6	2	28110-220240	WRENCH 22X24	1	1	1	1				
7	2	194080-82110	WRENCH 17X19	1	1	1	1				

N:Old $\frac{\text{Yes}}{\text{No}}$ New, Q:Old $\frac{\text{No}}{\text{Yes}}$ New, R:Old $\frac{\text{Yes}}{\text{Yes}}$ New, S:Old $\frac{\text{No}}{\text{No}}$ New, W:Add, Z:Discontinued, F:Interchangeable by set, K:Q'ty Change

(C)Copy Rights YANMAR CO.,LTD.

Fig.91. ROLL BAR (USA ONLY:OPTIONAL)

Fig. 91 ROLL BAR (OPTIONAL)

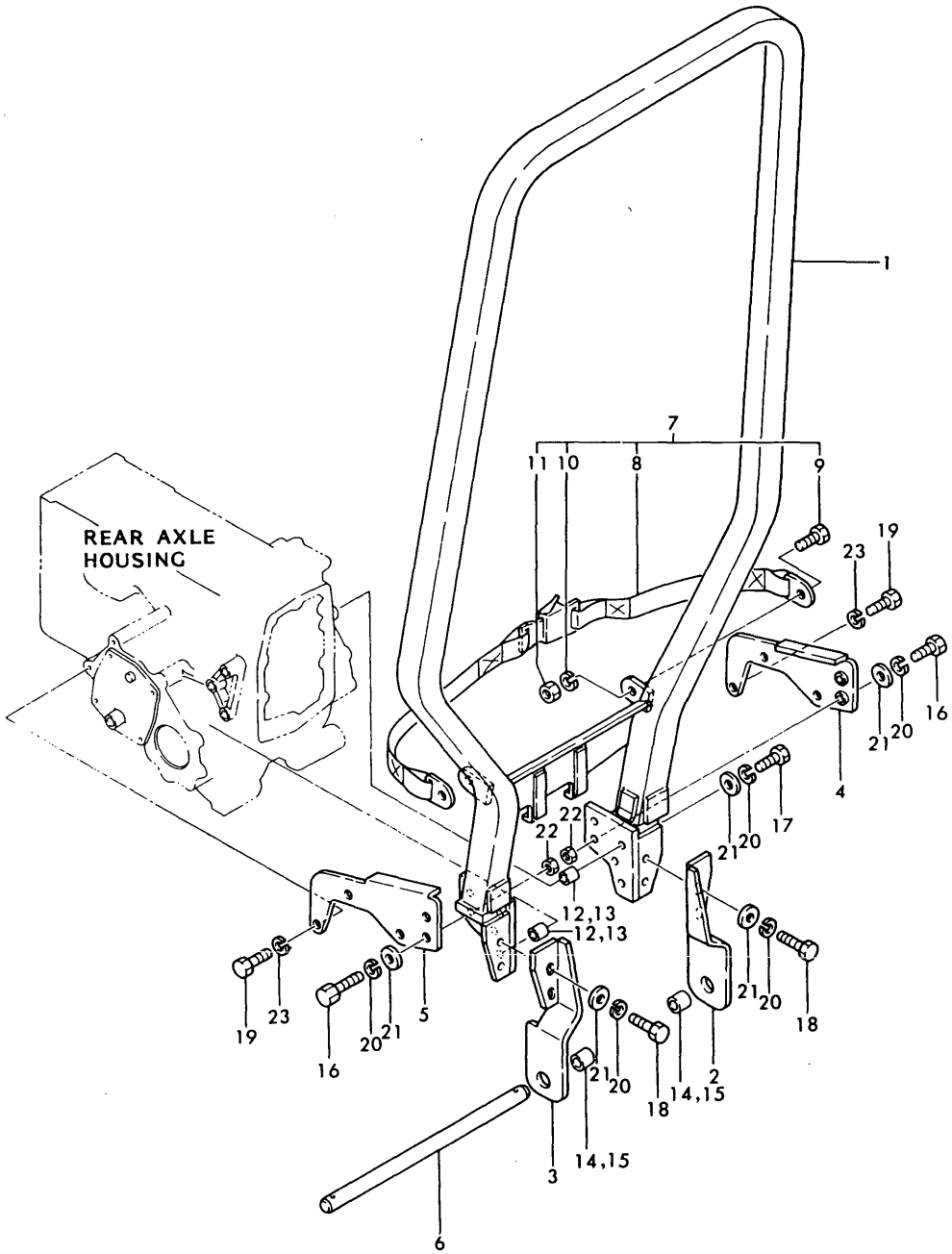

0CT10-G22801

91. ROLL BAR (USA ONLY:OPTIONAL)

(A)=YM186 (FLOOR
(B)=YM186D(FLOOR
(C)=YM186 (COLUM
(D)=YM186D(COLUM
(E)=
(F)=

REF.	LEV.	PARTS NO.	DESCRIPTION	Q'TY (A)	(B)	(C)	(D)	(E)	(F)	I	R
1	1	(2-12878)	ROLL BAR	1	1	1	1				1
2	1	(2-12896)	REAR MOUNT	1	1	1	1				1
3	1	(2-12897)	REAR MOUNT	1	1	1	1				1
4	1	(2-12902)	LOWER MOUNT	1	1	1	1				1
5	1	(2-12903)	LOWER MOUNT	1	1	1	1				1
6	1	(1-26924)	ROD, LIFT	1	1	1	1				1
7	1	(4-11790)	SEAT BELT KIT	1	1	1	1				1
8	2	(3-10287)	SEAT BELT	1	1	1	1				1
9	2	(3-10045)	SCREW CAP 0.437	2	2	2	2				1
10	2	(3-10152)	WASHER, LOCK 0.437	2	2	2	2				1
11	2	(3-10066)	NUT 0.437	2	2	2	2				1
12	1	(1-26944)	SPACER, PIPE	6	6	6	6				1
13	1	(1-18640)	SPACER	6	6	6	6				1
14	1	(1-26945)	SPACER, PIPE	2	2	2	2				1
15	1	(1-269462	SPACER, PIPE	2	2	2	2				1
16	1	(3-10406)	SCREW CAP 0.500	4	4	4	4				1
17	1	(3-12316)	SCREW M12X 45(P=1.75	6	6	6	6				1
18	1	(3-10130)	SCREW CAP 0.500	4	4	4	4				1
19	1	(3-12226)	SCREW M10X 25(P=1.50	6	6	6	6				1
20	1	(3-10079)	WASHER,LOCK 0.500	14	14	14	14				1
21	1	(3-10087)	WASHER,FLAT 0.500	14	14	14	14				1
22	1	(3-10067)	NUT 0.500	4	4	4	4				1
23	1	(3-10152)	WASHER,LOCK 0.437	6	6	6	6				1

N:Old $\xleftarrow[\text{No}]{\text{Yes}}$ New, Q:Old $\xleftarrow[\text{Yes}]{\text{No}}$ New, R:Old $\xleftarrow[\text{Yes}]{\text{Yes}}$ New, S:Old $\xleftarrow[\text{No}]{\text{No}}$ New, W:Add, Z:Discontinued, F:Interchangeable by set, K:Q'ty Change

(C)Copy Rights YANMAR CO.,LTD.

Part Number Index

All parts are stipulated in the order of part numbers.
(Depending on the area in which the part is used.)
This index will display the location of the part according to each part number.

MODEL : YM186(D)(B3730)
PC NO : 0CT10-G22801

PARTS No. INDEX

PARTS No.	Fig.	Ref.No.
(1-18640)	91	13
(1-26924)	91	6
(1-26944)	91	12
(1-26945)	91	14
(1-269462	91	15
(2-12878)	91	1
(2-12896)	91	2
(2-12897)	91	3
(2-12902)	91	4
(2-12903)	91	5
(3-10045)	91	9
(3-10066)	91	11
(3-10067)	91	22
(3-10079)	91	20
(3-10087)	91	21
(3-10130)	91	18
(3-10152)	91	10
		23
(3-10287)	91	8
(3-10406)	91	16
(3-12226)	91	19
(3-12316)	91	17
(4-11790)	91	7
(-)	58	99
		101
		102
		103
		107
	59	95
		97
		98
		99
		103
(----------)	64	12
(06.141.000)	64	11
(242NT)	58	98
	59	94
(321)	58	88
	59	84
(322)	58	78
	59	74
(8203)	58	70
	59	66
(A139-7)	58	77
	59	73
(A1594)	58	71
	59	67
(D1126)	58	80
		90
		100

PARTS No.	Fig.	Ref.No.
(D1126)	59	76
		86
		96
(D1127)	58	79
		89
	59	75
		85
(G113)	58	95
	59	91
(G114)	58	85
	59	81
(R1012)	58	74
	59	70
(R1094)	58	83
		93
	59	79
		89
(R1260)	58	87
		97
	59	83
		93
(R1329)	58	76
	59	72
(R1356)	58	73
	59	69
(R1415)	58	72
	59	68
(R1853)	58	86
		96
	59	82
		92
(R1856)	58	84
		94
	59	80
		90
(R1862)	58	82
		92
	59	78
		88
(SE490)	58	81
		91
	59	77
		87
(V60)	58	75
	59	71
*REF.33=10-1	33	64
*REF.33=1-1	33	43
*REF.33=11-1	33	58
*REF.33=12-1	33	59
*REF.33=13-1	33	60

PARTS No.	Fig.	Ref.No.
*REF.33=14-1	33	61
*REF.33=15-1	33	63
*REF.33=16-1	33	70
*REF.33=17-1	33	48
*REF.33=18-1	33	56
*REF.33=2-1	33	44
*REF.33=21-1	33	65
*REF.33=22-1	33	66
*REF.33=23-1	33	54
*REF.33=24-1	33	57
*REF.33=25-1	33	71
*REF.33=26-1	33	68
*REF.33=26A	33	49
*REF.33=26B	33	50
*REF.33=26C	33	51
*REF.33=26D	33	52
*REF.33=26E	33	53
*REF.33=26F	33	62
*REF.33=28-1	33	72
*REF.33=29-1	33	73
*REF.33=3	33	47
*REF.33=4-2	33	67
*REF.33=5-1	33	46
*REF.33=6-2	33	55
*REF.33=7-1	33	69
*REF.33=9-4	33	45
*REF.60=57-2	33	74
*REF.60=73-1	33	75
101147-11490	3	49
	21	16
101147-11900	3	24
101147-12550	4	15
101147-53080	12	4
101147-59810	13	48
101158-11230	3	34
		40
101304-59020	13	31 -1
101720-55750	13	4
		4 -2
102103-55520	13	14
	21	40
102210-07990	17	9
103854-51251	11	23
103854-51660	11	25
103854-53100	12	2
103854-53120	12	6
103854-53180	12	9
103854-59191	13	51
103854-59201	13	36 -1
		36 -2

PARTS No.	Fig.	Ref.No.
103854-59201	13	52
104104-67300	3	69
104200-11180	3	6
104200-14200	6	4
104200-55080	1	31 -1
104200-55321	13	7
104200-55330	13	8
104200-55341	13	6
104200-55750	13	10
104200-59170	13	37
	21	41
104200-61200	14	3
104211-03770	14	45
104211-11370	3	11
104300-76460	6	6
105225-01900	1	8
105225-02020	1	40
	21	7
105225-02300	1	50
105225-11100	3	3
105225-11110	3	4
105225-11350	3	12
105225-21500	7	15
105225-21501	7	15 -1
105225-22300	8	8
105225-22400	8	9
105225-23180	8	12 A
105225-23200	8	13
105311-23380	8	15
106100-59060	13	33
110250-53150	12	8
	52	36
110250-55610	13	13
113200-53110	12	5
113200-53120	12	7
119660-61220	14	4 -1
121000-01330	1	23 -2
	21	4 -2
121000-01750	1	33 -1
	21	6 -1
121000-42010	10	55
121000-42051	10	56
	21	30 B
121000-42100	10	57
121000-42120	10	64
121023-03760	3	62 -1
121023-42050	10	7
	21	30 A
121023-42051	10	7 -2
	21	30 A-2

MODEL : YM186(D)(B3730)
PC NO : 0CT10-G22801

PARTS No. INDEX

PARTS No.	Fig.	Ref.No.
121023-42100	10	1
121023-42290	10	68 -1
	22	8 A-1
121023-77910	16	1
	22	11
121085-01890	2	26 A
121120-77920	16	2
121150-35100	9	15
121150-51460	11	34
121241-07150	17	2 B
	68	36
	69	34
121250-03640	14	50
121250-35300	9	18
121250-35320	9	21
121250-35330	9	22
121250-35340	9	23
121250-44900	10	17
	22	6
121250-44901	10	17 -1
	22	6 -1
121250-55620	13	15
121250-59860	13	25
121254-07150	17	2 A
	65	40
	66	31
	67	31
121254-55510	13	12
121400-01850	1	56
121400-01860	1	55
121420-01760	3	56 -1
	21	19 -1
121440-12480	4	32
	17	4 B
	68	41
	69	39
121440-12520	4	34
	68	38
	69	36
121440-13490	5	1 B
121440-13610	5	3 B
121450-01100	1	17
121450-01203	1	4
121450-01210	1	5
121450-01220	1	6
121450-01231	1	7
121450-01330	1	23
	21	4
121450-01331	1	23 -1
	21	4 -1

PARTS No.	Fig.	Ref.No.
121450-01511	2	16 A
	21	10 A
121450-01531	2	23
	21	11
121450-01550	2	22
121450-01560	2	7 -1
121450-01570	2	4
121450-01650	1	25
121450-01710	1	34
121450-01751	1	33
	21	6
121450-01800	2	26
121450-01801	2	26 -1
121450-01951	1	35
121450-01960	1	10
121450-01980	1	11
	21	3
121450-01990	1	12
121450-02071	1	45
		49
121450-02072	1	45 -1
121450-02100	1	16
121450-02110	1	38
121450-02160	1	44
121450-02170	1	48
121450-02310	1	58
121450-02320	1	59
121450-02370	1	60
121450-02380	1	61
121450-03011	3	70
121450-03012	3	70 -1
121450-03020	3	71
121450-03030	3	77
121450-03610	3	57
121450-03750	3	60
121450-03760	3	62
121450-03770	3	63
121450-11240	3	25
121450-11260	3	28
121450-11270	3	29
121450-11310	3	54
	21	18
121450-11402	3	46
121450-11550	3	15
121450-11620	3	31
121450-11640	3	37
121450-11670	3	18
121450-11680	3	19
	21	14
121450-12710	4	21

PARTS No.	Fig.	Ref.No.
121450-12710	21	22
121450-13200	5	13
	21	24
121450-13201	5	13 -1
	21	24 -1
121450-13250	5	17
	21	25
121450-14010	6	1
121450-14090	6	2
121450-14120	6	6 -1
121450-14400	6	5
121450-21540	7	8
121450-21541	7	8 -2
121450-22090	8	1
121450-22091	8	1 -1
121450-32021	9	11
	21	26
121450-32091	9	1
121450-34800	1	51
121450-34830	1	52
121450-34831	1	52 -1
121450-34840	1	53
	21	8
121450-35090	9	13
121450-39201	9	25
121450-42050	10	7 -1
	21	30 A-1
121450-42240	10	4
		60
121450-42260	10	6
		61
121450-42290	10	68
	22	8 A
121450-42310	10	5
		62
121450-42350	10	25
121450-42450	10	18
121450-44410	10	12
	21	31
121450-44510	10	32
121450-44530	10	34
121450-44540	10	38
121450-44740	10	26
121450-49020	10	41 A
121450-49030	10	42 A
121450-51500	11	26
121450-59500	13	40
121450-59550	13	41
121450-59560	13	42
121450-59810	13	20

PARTS No.	Fig.	Ref.No.
121450-59820	13	21
121450-59830	13	22
121450-59850	13	26
121450-61000	14	5 -1
121450-61001	14	5 -2
121450-61100	14	1 -2
121450-61101	14	1 -3
121450-61520	14	18
		34
121450-61600	14	12
121450-61620	14	15
121450-61631	14	19
121450-66010	14	13
121450-66160	14	35
121450-66170	14	34 -1
121450-66180	14	33
121450-77010	15	1
	18	1
121450-77200	15	3
	19	1
121450-77330	15	5
121450-77690	16	10
121450-77700	16	3
121450-77711	15	4
121450-77810	16	6
121450-91400	2	44
121453-44500	10	28 B
121454-12100	4	20
121454-12110	4	23
121454-12300	4	2
121454-12480	4	33
	65	42
	66	33
	67	33
121454-12500	4	1
121454-12520	4	19
	17	4 A
	65	45
	66	36
	67	36
121454-12550	4	24
121454-12660	4	5
121454-13490	5	1 A
121454-13491	5	1 A-1
121454-13620	5	4
		4 -1
121454-13650	5	5
121454-13651	5	5 -1
121454-21590	7	11
121454-21591	7	11 -1

MODEL : YM186(D)(B3730)
PC NO : 0CT10-G22801

PARTS No. INDEX

PARTS No.	Fig.	Ref.No.
121454-21650	7	7
121454-21651	7	7 -1
121454-21652	7	7 -2
121454-42120	10	11
121454-44500	10	28 A
121454-44590	10	53
121454-49160	10	46
121454-51100	11	3
121454-55600	13	1
121454-59010	13	29
121454-59011	13	29 -1
121454-59060	13	33 -1
121454-59090	13	30
121454-66000	14	39
121454-66002	14	39 -1
121454-66420	14	29
121456-91400	2	46
121456-91981	2	50
121456-91991	2	49
121462-03740	3	60 -1
		61
121462-44580	10	30
121465-11950	3	23
121465-13582	5	14 -1
121465-59950	13	27 -1
121467-34800	1	51 -2
121470-01601	1	24
121470-13510	5	16
121470-13580	5	6
121470-13610	5	3 A
121470-34800	1	51 -1
121470-66550	14	20
121470-66551	14	20 -1
121470-66580	14	23
121476-11310	3	54 -1
	21	18 -1
121492-77200	15	9
	20	1
121520-01850	1	56 -1
121520-01851	1	56 -2
121520-01860	1	55 -1
121520-61520	14	18 -1
121520-61620	14	15 -1
121520-66550	14	20 -2
121520-66580	14	23 -1
121520-77710	15	4 -1
121550-11280	3	42
121550-11290	3	43
121550-49110	10	44
121550-49111	10	44 -1

PARTS No.	Fig.	Ref.No.
121551-66520	14	44
121551-66580	14	46
121551-66900	14	51
121554-49020	10	41 B
121567-61000	14	5 -3
121567-61620	14	15 -2
121567-61640	14	18 -2
121575-01510	2	16 B
	21	10 B
121750-01920	1	14
121750-59090	13	45
121750-59890	56	20 -2
		23 -1
		71 -1
	57	18 -1
		19 -1
		63 -1
	58	18 -1
		19 -1
		65 -1
	59	18
		19
		64
121750-77800	16	5
123325-59100	13	23
123325-59110	13	24
124040-07160	17	3 B
	68	37
	69	35
124060-01050	1	3
	2	3
124060-01640	1	31
124060-11120	3	5
124060-11800	3	8 A
124060-11810	3	9 A
124060-21600	7	14
124060-51300	11	5
124060-59380	13	4 -1
		38
		53
124060-59391	13	36
124060-77680	13	47
		50
	16	4
	25	8
124064-07160	17	3 A
	65	41
	66	32
	67	32
124064-12400	4	9

PARTS No.	Fig.	Ref.No.
124064-12420	4	11
124064-12430	4	13
	21	21
124064-12440	4	14
124064-12450	4	17
124064-12460	4	18
124064-12470	4	12
124064-12510	4	4
	22	2
124064-12560	4	25
124064-12570	4	26
124064-12580	4	27
124064-12670	4	6
124064-12680	4	7
124064-12690	4	8
124066-59100	13	46
124067-12050	4	22
	21	23
124085-01820	2	40
		40 -1
124085-01900	1	8 -1
	10	71
124085-02220	1	39 -1
124085-35300	9	18 -1
124085-35350	9	24 -1
124160-01650	3	75
	13	34
124160-01751	3	55
124160-11360	3	50
124160-39140	9	26
124160-39450	9	30
	22	5
124160-49480	2	43
	10	54
124160-77020	15	2
124220-51890	11	15
124240-01882	2	36
	21	13
124240-01883	2	36 -1
	21	13 -1
124250-03640	14	50 -1
124250-59260	13	31
124450-02220	1	39
124450-12560	4	15 -1
124450-12571	4	16
124450-35070	9	14
124450-35110	9	17
	21	27
124450-35350	9	24
124450-39240	9	31

PARTS No.	Fig.	Ref.No.
124450-44550	10	37
124450-44560	10	36
124450-44590	10	29
124460-77820	16	7
124465-44950	10	20 A
		20 B
	21	33
		33 -1
124550-35110	9	16
	22	4
124550-51320	11	7
124550-51341	11	8
124550-51350	11	6
	21	37
124550-51370	11	9
	21	38
124550-51590	11	29
124550-55700	13	11
	22	10
124550-59030	13	43
124550-59090	13	44
124550-59820	9	28
124550-66370	14	30
124550-77710	15	12
124610-77210	15	10
124736-49540	10	23
	21	34
124738-49150	10	45
124740-44800	10	65 B
	17	5 B
	68	39
	69	37
124740-44810	10	66 B
	17	7 B
	68	42
	69	40
124740-44920	10	67 B
	17	6 B
	68	40
	69	38
124764-44800	10	65 A
	17	5 A
	65	43
	66	34
	67	34
124764-44810	10	66 A
	17	7 A
	65	46
	66	37
	67	37

MODEL : YM186(D)(B3730)
PC NO : 0CT10-G22801

PARTS No. INDEX

PARTS No.	Fig.	Ref.No.
124764-44920	10	67 A
	17	6 A
	65	44
	66	35
	67	35
124766-59050	10	47
	13	32
		35
	25	10
124770-53000	12	3
	22	9
124950-11340	3	10
	21	45
124950-11410	3	47
124950-11450	3	48
	21	15
124950-21230	7	13
124950-26420	2	32
124950-51190	11	10
124950-51270	11	4
	21	36
124950-51450	11	33
124950-51510	11	13
124950-51640	11	24
124950-55900	15	8
124950-66590	14	24
129150-59020	13	31 -2
129350-01230	1	7 -1
129350-14100	6	3
129350-21200	7	6
129350-26000	2	27
129350-26050	2	28
129350-26100	2	29
129350-26160	2	37
129350-26200	2	30
129350-26400	2	31
129350-26490	2	33
129350-32090	9	1 -1
129350-42200	10	3
		59
129350-49010	10	40
129350-49120	10	49
129350-49130	10	48
129350-49530	10	22
129350-49540	10	23 -1
	21	34 -1
129350-49541	10	23 -2
	21	34 -2
129350-49800	10	21
	22	7

PARTS No.	Fig.	Ref.No.
129350-61600	14	12 -1
129354-77330	15	11
135210-61090	14	31
160260-01800	3	59 -1
171003-49030	10	42 B
171022-44960	10	69
	22	8 B
171051-01921	1	14 -1
172100-53200	12	10
	21	39
172200-61220	14	4
174100-54120	11	21
174307-51170	11	11
174307-51181	11	12
174307-51700	11	22
194080-15420	33	11 -1
194080-15430	33	12 -1
194080-15440	33	13 -1
194080-15450	33	14 -1
194080-15550	33	31
194080-27190	44	18
194080-27480	23	4
194080-37781	50	31
194080-51430	56	4
	57	4
	58	4
	59	4
194080-52130	57	29 -1
194080-52131	57	29 -2
194080-52132	57	29 -3
194080-57202	56	36
	57	32
	58	32
	59	32
194080-58810	56	70
	57	62
		62 -1
	58	64
	59	63
	60	65
	61	64
	62	64
194080-58820	57	105
194080-64780	68	44
	69	33
194080-74621	70	26
	71	32
194080-74631	70	27
	71	33
194080-81111-R	88	10

PARTS No.	Fig.	Ref.No.
194080-81212-R	88	3
194080-81230-R	88	2
194080-82110	90	7
194081-54110	57	79
	89	2
194081-54120	57	80
	89	3
194081-54131	57	81
	89	4
194081-54151	57	82
	89	5
194081-54210	57	83
	89	6
194081-54221	57	84
	89	7
194081-54230	57	85
	89	8
194081-54240	57	86
	89	9
194081-55820	56	90
	57	87
	89	10
194100-12911	84	2
194100-12911-Q	80	2
194100-41670	55	18
194110-37691	50	25
194110-56150	56	26
	58	23
194110-56170	56	27
	58	22
194115-15100	33	1 -1
194115-15110	33	2 -1
194115-15140	33	9 -4
194115-15250	33	17 -1
194115-15500	33	21 -1
194115-34760	49	20 -1
194130-15470	33	10 -1
194130-22170	34	48
194130-22280	34	5
194130-27390	37	13
194130-37560	50	20
194130-37740	50	29
194130-41120-X	55	1
194130-44480	52	39
194140-63221	63	39
	64	44
194140-63270	63	40
	64	45
194145-01260	23	6
	24	6

PARTS No.	Fig.	Ref.No.
194145-04301	25	2
194145-04302	25	2 -1
194145-04310	25	3
194145-04311	25	3 -1
194145-04350	25	4
194145-04351	25	4 -1
194145-04460	25	5
194145-04520	25	6
194145-04521	25	6 -1
194145-04530	25	7
194145-04810	44	73
	60	14 -1
	61	14
194145-11350	29	6
194145-15651	33	29 -1
194145-27960	45	2
194145-36651	35	18
	36	16
194145-47160	44	22
		33
		38
194145-52820	56	47
	57	41
	58	43
	59	42
194145-52830	56	48
	57	42
	58	44
	59	43
194145-52840	56	49
	57	43
	58	45
	59	44
194145-52850	59	45
194145-61560	60	79
	61	75
	62	49
194145-61570	60	14 -2
	61	14 -1
	62	14
194145-61650	60	10
		54
	61	10
		53
	62	10
		53
194145-64430	60	55 -1
		55 -2
		83
	61	54

MODEL : YM186(D)(B3730)
PC NO : 0CT10-G22801

PARTS No. INDEX

PARTS No.	Fig.	Ref.No.
194145-64430	61	79
	62	54
		78
	63	62 -1
	64	67 -1
		67 -2
194145-72550	70	15
		19
194145-75250	70	28
	71	34
194146-21150-X	34	9
194146-21160	34	10
194146-21161	34	10 -1
194150-01270	23	10
	24	10
194150-01370	23	19
	24	19
194150-11350	32	20
194150-12300	29	20 -1
	32	1 -1
194150-12410	29	26
194150-12410-U	32	13
194150-21910	26	21
	27	21
	28	21
	34	6
	35	11 -1
	36	11
194150-22160	34	46
194150-22220	34	45
194150-22240	34	43
194150-22250	34	4
194150-22310	34	34
194150-22311	34	34 -1
194150-22480	50	35
194150-37510	50	28
194150-37530	50	13
194150-37570	50	21
194150-45320	52	34 -1
194150-45361	52	32
194150-47621	54	2
194150-51620	56	20 -1
		23
		44
		71
	57	18
		19
		38
		63
	58	18

PARTS No.	Fig.	Ref.No.
194150-51620	58	19
		40
		65
194150-52160	56	40
	57	35
	58	36
	59	36
194150-52170	56	41
	57	36
	58	37
	59	37
194150-61740	61	41
	62	41
194150-71230	70	9
		9 -1
	71	8
		8 -1
194150-74670	70	24
194150-74670-X	71	30
194150-74720	70	25
	71	31
194151-11480	29	5
194151-11640	29	15
194151-11650	29	16
194151-11660	29	9
194151-11670	29	36
194151-11840	29	10
194151-11860	29	11
194151-12610-X	29	42
194151-12620	29	45
194151-24770	30	6
		33
	35	12
	36	12
194151-36670	30	5
		30
	35	4
	36	4
194151-37730	50	33
194151-37771	50	30
194151-46261	52	30
194151-48710	55	32
194151-57100	56	6
	57	6
194151-57210	56	37
	57	33
	58	33
	59	33
194151-63240	63	51
	64	56

PARTS No.	Fig.	Ref.No.
194151-63250	63	52
	64	57
194155-05210	28	24 -1
	60	75 -1
194155-52110	56	34
	58	30
194155-52160	57	31 -1
194155-52190	56	35
	57	31
	58	31
	59	31
194155-55820	57	96
	59	112
194162-53310	44	44
194162-58830	57	106
	60	66
	61	65
	62	65
194170-01110	23	1 -1
	24	1
194170-27140	44	12
194170-27170-X	44	16
194170-27180-X	44	17
194170-27190	44	19
194170-27260	44	29
194170-27261	44	29 -1
194170-27290-X	44	34
194170-27310-X	44	35
194170-27340-X	44	40
194170-27370-X	44	42
194170-27380	43	18 -1
	44	26 -1
194170-52130	57	29 -4
	59	29
194170-55120	57	91
	59	107
194170-55130	57	92
	59	108
194170-55150	57	93
	59	109
194170-55160	57	94
	59	110
194170-55170	57	95
	59	111
194170-63110-X	63	66
194170-63111-X	63	66 -1
194170-65470	66	17
194170-65580	66	20
	69	21
194170-65620	65	15 -1

PARTS No.	Fig.	Ref.No.
194170-65620	66	11
	67	11
194170-65890	66	3
	69	3
194170-65891	66	3 -1
	69	3 -1
		3 -2
194180-12650	29	43 -1
194190-11520	30	3
194190-15560	33	27
194190-21190	34	3
194190-61250	60	17
	61	16
	62	16
194190-61560	60	39
		64
	61	38
		63
	62	38
		63
194190-61761	60	45
	61	44
	62	44
194190-61780	60	46
	61	45
	62	45
194191-13211-X	26	15
	27	15
	28	15
194191-13220	26	16
	27	16
	28	16
194191-13232	26	17
	27	17
	28	17
194191-13240	26	18
	27	18
	28	18
194191-13420	30	4
194191-28480	46	2
194195-44411	52	25 -2
		26 -2
194197-01160	23	4 -1
	24	4
194197-34900	80	8 -1
		13 -1
	82	13 -1
		18 -1
	84	8
		13

MODEL : YM186(D)(B3730)
PC NO : 0CT10-G22801

PARTS No. INDEX

PARTS No.	Fig.	Ref.No.
194197-34900	86	13
		18
194197-34910	80	9 -1
		14 -1
	82	14 -1
		19 -1
	84	9
		14
	86	14
		19
194197-34920	80	10 -1
		15 -1
	82	15 -1
		20 -1
	84	10
		15
	86	15
		20
194197-72551	71	15
		22
194198-14130	30	31 -2
194200-34750	49	27
194200-36551	50	9
194200-36790	50	3
194200-43161	52	6
194200-45150	53	14
194200-45180	53	13
194200-45190	53	12
194200-45210	53	11
194200-45260	53	10
194200-47620	54	16
194201-45160	53	4
194201-45270	53	15
194201-45280	53	5
194201-53050	56	15
	57	13
194201-53051	56	15 -1
	57	13 -1
194201-53100	56	17 -1
	57	15 -1
194201-53110	56	17 A
	57	15 A
194240-12910-Q	81	2
	85	2
194240-12920-Q	81	3
	85	3
194240-12930-Q	81	4
	85	4
194240-12950	81	9
	85	9

PARTS No.	Fig.	Ref.No.
194240-12960	81	10
	85	10
194240-12970	81	8
	85	8
194240-51800	58	12
	59	12
194240-51810	58	13
	59	13
194240-51820	58	14
	59	14
194240-52120	58	28
	59	28
194240-52210	56	61
		66
	57	53
		58
	58	55
		60
	59	54
		59
194240-52400	59	40
194240-62260-R	64	17
194240-65431	65	11
194240-65432	65	11 -1
	66	7
	67	7
	68	10
	69	7
194240-65440	65	12
194240-65441	65	12 -1
	66	8
	67	8
	68	11
	69	8
194240-65510	65	13
194240-65511	65	13 -1
	66	9
	67	9
	68	12
	69	9
194240-65670	65	14
194240-65671	65	14 -1
	66	10
	67	10
194240-65710	65	15
194240-75740	72	4
194240-98221	68	13
	69	10
194240-98251	68	18
	69	15

PARTS No.	Fig.	Ref.No.
194241-15310	33	23 -1
194241-15350	33	24 -1
194242-75730-X	73	9
194242-75740	73	10
194242-75750	73	4
194250-51660	56	44 -1
	57	38 -1
	58	40 -1
	59	39
194250-61640	60	82
	61	78
	62	77
194262-15150-X	33	5
194262-15170	33	3
194262-15220	33	4 -1
194262-15310	33	23
194262-15330	33	6 -1
194262-15410	33	9 -2
194262-15420	33	11
194262-15430	33	12
194262-15440	33	13
194262-15450	33	14
194262-15460	33	15
		15 -1
194262-15470	33	10
194262-15520	33	22
194262-53080	56	16
	57	14
194262-53090	56	18
	57	16
194262-53100	56	17
	57	15
194262-62400-R	63	3
	64	3
194273-65611	66	22
	67	22
	68	26
	69	23
194274-13550	30	15 -1
194274-13570	30	16 -1
	35	31
194274-13580	49	21
194275-01110	23	1
194275-01352	23	11
	24	11
194275-53401	56	79
	57	69
194275-53410	56	80
	57	70
194275-53421	56	81

PARTS No.	Fig.	Ref.No.
194275-53421	57	71
194275-53431	56	82
	57	72
194275-53451	56	84
	57	74
194275-53481	56	87
	57	77
194275-54100	56	89
194275-54110	56	103
194275-54120	56	91
194275-54130	56	92
194275-54140	56	93
194275-54150	56	94
194275-54160	56	96
194275-54170	56	97
194275-54180	56	98
194275-54190	56	99
194275-54210	56	102
194275-54220	56	104
194275-62310	60	84
	61	80
	62	74
		79
194275-62320	60	29
	61	28
	62	28
	63	62
	64	67
		73
194275-62370	60	72
		72 -1
	61	73
	62	73
194275-63111-X	63	32
	64	38
194275-63120	63	33
194275-65660	65	31 -1
	66	25
	67	25
194278-12650	29	43 -2
194279-14210	32	38 -2
194279-14220	32	39 -2
194281-63240	63	48
	64	53
194286-71500-X	71	2
194292-75750	73	4 -1
194300-24130	35	3
	36	3
194300-24180	37	8
194300-24200-X	37	9

MODEL : YM186(D)(B3730)
PC NO : 0CT10-G22801

PARTS No. INDEX

PARTS No.	Fig.	Ref.No.
194300-24210	37	10
194300-24310	38	17
194300-24320	38	3
194300-24340	38	6
194300-24350	38	7
194300-24400	38	22
194300-24511	39	2
194300-24571-X	39	16
194300-24651-X	35	36
	36	32
194300-24700	39	30
194300-24750-X	35	21
	36	19
194300-24760-X	35	23
	36	21
194300-24770	35	24
	36	22
194300-24840	35	27
	36	25
194300-24850	35	39
194300-24851	35	39 -1
194300-24870	35	43 -1
	36	39
	45	14
194300-24880-X	35	32
	36	28
194300-24890	35	33
	36	29
194300-24970	39	32
194300-24980	39	35
194300-25100	38	20
	42	9
194300-25180	38	8
194300-25190	38	9
194300-25390	42	4
194300-25470	40	26
194300-25500	42	19
194300-25510	42	20
194300-25540	42	21
194300-25550	42	22
194300-25730	41	35
194300-25760	41	6
		19
194300-25770	41	7
		20
194300-25780	41	8
		21
194300-25790	41	9
		22
194300-25820	41	36

PARTS No.	Fig.	Ref.No.
194300-25830	41	38
194300-25860	41	40
194300-25870	41	41
194300-25880	41	42
194300-25890	41	34
	42	33
194300-25930	41	37
194300-25960	41	43
194300-27100	43	9
	44	9
194300-27140	43	2
	44	13
194300-27160	43	22
194300-27170	43	23
194300-27240	43	18
	44	26
194300-27300	43	28
194300-27370	43	43
194300-27500	45	9
194300-31120	47	9
		9 -1
194300-31500	47	6
194300-31520	47	8
194300-31550	31	48
	47	10
194300-31560	31	46
	47	15
194300-31570	31	45
	47	14
194300-31610	31	49
	47	11
194300-31620	31	47
	47	16
194300-32200	49	3
194300-32250	49	5
194300-32260	31	40
	49	4
194300-32390	47	23
194300-33110	48	18
194300-33120	48	12
194300-33130	48	19
194300-33200	48	17
194300-36500	50	8
194300-36800-X	50	4
194300-36850	50	5
194300-37110	50	10
194300-42110-X	52	1
194300-42111-X	52	1 -1
194300-42120	52	2
194300-43220	52	11

PARTS No.	Fig.	Ref.No.
194300-43230	52	12
194300-43240	52	10
194300-43410	52	16
194300-44210	52	19
194300-44230	52	24
194300-44250	52	21
194300-44260	52	22
194300-44550	54	19
194300-44760	54	4
194300-44811	54	6
194300-45100-X	53	1
194300-45170	53	9
194300-45240	53	8
194300-45350	53	20
194300-46110	53	22
194300-46611	51	8
	53	27
194300-46621	53	29
194300-46630	53	32
194300-46640	51	9
	53	33
194300-58110	60	41
194301-11660	31	41
194301-11800	31	43
194301-22830	46	6
194301-22860	46	3
194301-22870	46	4
194301-24400	38	30
194301-24420	38	25
194301-25650	47	4
194301-28101	46	11
194301-28110	46	12
194301-28160	46	22
194301-28210	46	23
194301-28230	46	27
194301-28240	46	28
194301-28272	46	8
194301-28280	46	18
194301-28290	46	10
194305-33110	48	18 -1
194305-33130	48	19 -1
194305-34720-Q	49	19 -1
194305-99610	33	76
194310-04250	25	11
194310-15320	33	6 -2
194310-24240	43	6
	44	6
194310-24520	39	3
194310-24660	39	23
194310-24760	43	7

PARTS No.	Fig.	Ref.No.
194310-24760	44	7
194310-24770	39	27
194310-25050	40	1
194310-25620	41	2
		15
194310-25630	41	3
		16
194310-25700	41	31
194310-27140	43	12
	44	14
194310-27180	43	29
	45	10
194310-29510	43	17
194310-37560	42	31
194310-46450	52	34
194310-46460	52	35
194310-47850	51	16
194310-65720	65	19
	66	15
	67	15
194312-51210	57	103
194312-61290	60	81
	61	77
	62	76
194320-41150	55	4
194320-41160	55	12
194320-42150	35	30
194321-11921	32	20 -1
194321-11940	30	19 -1
194322-24980	35	54
	36	48
194322-52110	56	34 -1
	57	30
	58	30 -1
	59	30
194322-63250	63	50
	64	55
194322-63280	63	49
	64	54
194322-71600-X	71	6
194322-71700-X	71	5
194324-62310	60	85
	61	81
	62	80
194340-11920	78	4 -1
		9
	83	4
		9
	87	4
		9

MODEL : YM186(D)(B3730)
PC NO : 0CT10-G22801

PARTS No. INDEX

PARTS No.	Fig.	Ref.No.
194340-21400	34	37
194340-21410	34	50
194340-21700	34	38
194340-57100	58	6
	59	6
194340-65590	65	16
194340-65690	65	18
194340-65750	65	20
194340-98391	68	19
	69	16
194340-98421	68	17
	69	14
194345-65690	65	18 -1
	66	14
	67	14
194345-65750	65	20 -1
	66	16
	67	16
194357-21400	34	37 -3
194370-65451	65	16 -1
	66	12
	67	12
	68	15
	69	12
194420-05210	26	3
	27	3
	28	3
194420-11520	29	4
194420-11880	29	14
194420-12640	29	39
194420-12720	29	35
194420-52120	57	28 -1
194420-61250-M	60	2
194420-61250-Q	60	2 -1
194420-61500-R	60	47
194420-61580	60	40
	61	39
	62	39
194420-61640	60	9
		9 -1
		53
	61	9
		9 -1
		52
	62	9
		9 -1
		52
194420-65590	60	5
	61	5
	62	5

PARTS No.	Fig.	Ref.No.
194420-65600	65	17
194420-72230-X	70	12
194420-74800	70	23
	71	29
194420-74820	70	23 -1
	71	29 -1
194421-13640	30	20 -1
194421-13650	30	21 -1
194422-61371	61	7
	62	7
194422-61371-Q	60	7
194430-61500-R	60	47 -1
	61	46
	62	46
194432-11140	26	13 -1
	27	13 -1
	28	13
194432-27200	44	23
194432-27201	44	23 -1
194432-27270-X	44	31
194432-56100	57	20
	59	20
194432-56130	57	97
	59	113
194432-56150	57	22
	59	23
194432-56170	57	23
	59	22
194432-61600	57	90
	59	106
	62	47
194432-61610	57	98
	59	114
194436-05110	28	1 -1
194440-01510	23	25
194440-01511	23	25 -1
	24	25
194440-01550	23	28
	24	28
194440-11360	29	3
194440-11870	29	13
194440-12111-X	29	18
194440-12211-X	29	19
194440-15100-X	33	1
194440-15110-X	33	2
194440-15200	33	17
194440-15230	33	19
194440-15240	33	20
194440-15340	33	18
194440-15341	33	18 -1

PARTS No.	Fig.	Ref.No.
194440-15500	33	21
194440-15610	33	28
194440-15650	33	29
194440-15760	33	35
194440-15800	33	32 -1
194440-15870	33	34 -1
194440-21100-X	34	1
194440-21101-X	34	1 -1
194440-21102-X	34	1 -2
194440-22331-X	34	23
194440-22441	34	33
194440-22460	34	24
194440-22470	34	25
194440-24260-X	37	18
194440-24810	35	20
	36	18
194440-24900-X	48	1
194440-24910-X	48	5
194440-24920	48	6
194440-24950	39	31
194440-24990-X	43	40
194440-25120	40	8
194440-25130	40	13
194440-25150	40	6
194440-25260	40	12
194440-25280	40	11
194440-25290	40	10
194440-25300	42	1
194440-25320	42	5
194440-25350	42	3
194440-25380	42	2
194440-25400	40	25
194440-25410	40	22
194440-25420	40	21
194440-25430	40	23
194440-25440	40	24
194440-25460	40	20
194440-25680	41	27
194440-25690	41	28
194440-25691	41	28 -1
194440-25700	41	29
194440-25710	41	30
194440-25741	41	4
		17
194440-25751	41	5
		18
194440-25810	41	10
		23
194440-27110	43	11
	44	10

PARTS No.	Fig.	Ref.No.
194440-27130-X	43	1
194440-27210	43	14
194440-27260-X	43	16
194440-27310	43	31
194440-27350-X	43	36
194440-27360	43	32
194440-27370	43	33
	45	3
194440-27570	45	6
194440-29580	43	15
	44	43
194440-31400	47	28
194440-32110	47	17
194440-32150	49	1
194440-32210	47	22
194440-32350	47	25
194440-32360	47	26
194440-32370	47	27
194440-32520	49	6
194440-32570	49	10
194440-32580	49	12
194440-33190	48	15
194440-36530	50	8 -1
194440-37420-X	50	12
194440-37470-X	50	16
194440-37540-R	50	14
194440-37550-X	50	17
194440-37660-X	50	23
194440-37670	50	24
194440-43100	52	9
194440-43310	52	13
194440-43330	52	14
194440-44110	52	17
194440-44111	52	17 -1
194440-44112	52	17 -2
194440-44660	54	20
194440-48210	55	61
194440-48830	55	56
194440-48840	55	57
194440-51150	56	9
	57	9
194440-51180	56	42
	58	38
194440-51420	56	5
	57	5
	58	5
	59	5
194440-51550	56	2
	57	2
	58	2

MODEL : YM186(D)(B3730)
PC NO : 0CT10-G22801

PARTS No. INDEX

PARTS No.	Fig.	Ref.No.
194440-51550	59	2
194440-51620	56	53 -1
		58
	57	45 -1
		50
	58	47 -1
		52
	59	47
		51
194440-51630	56	10
		20
		53
		57
	57	10
		45
		49
	58	10
		47
		51
	59	10
		50
194440-52120	56	32
	57	28
194440-52130	56	33
	57	29
	58	29
194440-52190	56	60
		65
	57	52
		57
	58	54
		59
	59	53
		58
194440-52191	56	60 -1
		65 -1
	57	52 -1
		57 -1
	58	59 -1
	59	53 -1
		58 -1
194440-52400	56	45
	57	39
	58	41
194440-52420	57	40 A
	58	42 A
	59	41 A
194440-55100	56	73
	58	67
194440-55820	56	74

PARTS No.	Fig.	Ref.No.
194440-55820	58	68
194440-56900	56	30
	57	26
	58	26
	59	26
194440-61220	60	68
	61	67
	62	67
194440-61320-X	60	11
	61	11
	62	11
194440-61550	60	63
	61	62
	62	62
194440-61570	60	62
	61	61
194440-61610	60	48
	61	47
194440-61670-R	60	49
	61	48
194440-61690	60	50
	61	49
194440-61740	60	42
194440-61741	60	42 -1
194440-61820	60	20
	61	19
	62	19
194440-61830	43	48
	60	22
194440-61831	60	22 -1
	61	21
	62	21
194440-62150-R	63	13 -1
	64	15
194440-62160-R	63	14 -1
	64	16
194440-62580	63	65
	64	70
194441-13130	31	12
194441-13301	31	13
194441-13302	31	13 -1
194441-13303	31	13 -2
194441-13310-X	31	15
194441-13321	31	22
194441-13322	31	22 -1
194441-13330	31	17
		25
194441-13340	31	14
194441-13341	31	14 -1
194441-13351	31	21 -1

PARTS No.	Fig.	Ref.No.
194441-13351	31	60 -1
194441-13360	31	27
194441-13370	31	24
194441-13380	31	23
194441-13381	31	23 -1
194441-13390	31	16
194441-13391	31	16 -1
194441-14610-X	31	11
194441-14650	31	9
194441-14660	31	1
194441-14670	31	10
194441-24150-X	37	1
194441-28150	46	21
194441-28360	46	5
194441-31400	47	1
194446-01140-U	23	7
	24	7
194446-01320	23	16
	24	16
194446-01440-U	23	21
	24	21
194446-04110	25	1
194446-04111	25	1 -1
194446-04112	25	1 -2
194446-04710-X	25	14
194446-04720	25	9
194446-05110-R	26	1
	27	1
	28	1
194446-05120-R	26	2
	27	2
194446-05121-R	26	2 -1
	27	2 -1
	28	2
194446-05220	26	5
	27	5
	28	5
194446-11110-X	26	7
	27	7
	28	7
194446-11111-X	26	7 -1
	27	7 -1
	28	7 -1
194446-11130-X	26	8
	27	8
	28	8
194446-11140	26	13
	27	13
194446-11200-X	29	1
194446-11800-X	29	8

PARTS No.	Fig.	Ref.No.
194446-12950	80	3
	84	3
194446-12960	80	4
	84	4
194446-12970	80	5
	84	5
194446-16100-X	33	36
194446-16101	33	36 -1
194446-16102	33	36 -2
194446-21100	34	1 -3
194446-22110	34	42
194446-22400-X	34	31
194446-24040	38	1
194446-24100-X	35	1
194446-24101-X	35	1 -1
194446-24102-X	35	1 -2
	36	1
194446-24290	38	5
194446-24300-X	38	2
194446-24500-X	39	1
194446-24540	39	7
194446-24550	39	8
194446-24560	39	4
194446-24561	39	4 -1
194446-24580	39	9
194446-24610	39	13
194446-24620	39	14
194446-24630	39	10
194446-24770-X	35	53
		53 -1
	79	7
194446-24820-X	35	8 -1
194446-24821-X	35	8 -2
	36	8
194446-24850	35	39 -2
	36	35
194446-24860	35	40 -1
	36	36
194446-24900	35	50
	36	46
194446-24930-X	48	7
194446-25110	40	14
194446-25160	40	3
194446-25170	40	17
194446-25230	40	4
194446-25450	40	19
194446-25620	41	39
194446-25630	47	5
194446-25950	42	10
194446-25951	42	10 -1

MODEL : YM186(D)(B3730)
PC NO : 0CT10-G22801

PARTS No. INDEX

PARTS No.	Fig.	Ref.No.
194446-26110	42	11
194446-26280	42	16
194446-26310	42	25
194446-26320	42	27
194446-26330	42	28
194446-26410	42	12
194446-26420	42	13
194446-26450	42	14
194446-26460	42	15
194446-26470	42	17
194446-26910-X	35	45
194446-27220	43	48 -1
194446-27250	43	47
194446-27270-U	43	46
194446-27280-X	43	21 -1
194446-27510	45	12
194446-27560-X	45	1
194446-27570	45	6 -1
194446-32510-U	49	7
194446-32530-U	49	8
194446-32550	49	18
194446-32660	49	16
194446-32670	49	17
194446-33150-X	48	10
194446-34650-Q	80	7
		12
	81	12
		17
	82	12
		17
	83	12
		17
	84	7
		12
	85	12
		17
	86	12
		17
	87	12
		17
194446-34710-Q	49	19
194446-34720	81	14
		19
	83	14
		19
	85	14
		19
	87	14
		19
194446-34730	81	15

PARTS No.	Fig.	Ref.No.
194446-34730	81	20 -1
	83	15
		20
	85	15
		20
	87	15
		20
194446-34750	81	13
		18
	83	13
		18
	85	13
		18
	87	13
		18
194446-34760	49	20
194446-34900	80	8 -2
		13 -2
	82	13 -2
		18 -2
	86	13 -1
		18 -1
194446-34910	80	9 -2
		14 -2
	82	14 -2
		19 -2
	86	14 -1
		19 -1
194446-34920	80	10 -2
		15 -2
	82	15 -2
		20 -2
	86	15 -1
		20 -1
194446-36700-X	50	1
194446-36750-X	50	11
194446-42210	51	3
194446-42220	51	4
194446-42230	51	5
194446-43200	51	2
194446-44410-X	52	25
194446-44411	52	25 -1
194446-44420-X	52	26
194446-44421	52	26 -1
194446-44450-X	52	27
194446-44510-X	54	22
194446-44610	54	13
194446-44700-X	54	1
194446-44910	54	9
194446-44911	54	9 -1

PARTS No.	Fig.	Ref.No.
194446-44912	54	9 -2
194446-44930	54	10
194446-44931	54	10 -1
194446-48110-X	55	19
194446-48220-X	55	33
194446-48230-X	55	34
194446-48240-X	55	27
194446-48250-X	55	31
194446-48380-X	55	48
194446-48381-X	55	48 -1
194446-48650	55	25
194446-51110	56	19
194446-51120	56	56
194446-51160	56	72
	57	64
	58	66
	59	65
194446-51310	56	1
	57	1
	58	1
	59	1
194446-51410	56	3
	57	3
	58	3
	59	3
194446-52220-X	56	62
	57	54
	58	56
	59	55
194446-52230-X	56	67
	57	59
	58	61
	59	60
194446-56100	56	24
	58	20
194446-61100-R	60	1
194446-61310	61	7 -1
	62	7 -1
194446-61310-Q	60	7 -1
194446-61570-X	60	62 -1
	61	61 -1
	62	61
194446-61571	60	62 -2
	61	61 -2
	62	61 -1
194446-61580	60	67 -1
	61	66
	62	66
194446-61620-R	60	52 -1
	61	51

PARTS No.	Fig.	Ref.No.
194446-61620-R	62	51
194446-61621-R	60	52 -2
	61	51 -1
	62	51 -1
194446-61660-X	60	57
	61	56
	62	56
194446-61700-X	60	24
194446-61850-X	60	36
	61	35
	62	35
194446-61860	60	34
	61	33
	62	33
194446-61870	60	35
	61	34
	62	34
194446-61910	60	3
194446-61920	60	8
	61	8
	62	8
194446-61930	60	19
	61	18
	62	18
194446-61940	60	30
	61	29
	62	29
194446-61950	60	31
	61	30
	62	30
194446-61960	60	32
	61	31
	62	31
194446-61970	60	33
	61	32
	62	32
194446-61981	60	69
		69 -1
	61	68
		68 -1
	62	68
194446-61990	60	70
		70 -1
	61	69
		69 -1
	62	69
194446-62110-R	63	1
	64	1
194446-62120-R	63	2
	64	2

MODEL : YM186(D)(B3730)
PC NO : 0CT10-G22801

PARTS No. INDEX

PARTS No.	Fig.	Ref.No.
194446-62180-R	63	7
194446-62310	60	56
	61	55
	62	55
194446-62510-X	63	23
	64	29
194446-62520-X	63	24
	64	30
194446-62550-X	63	29
	64	35
194446-63210-X	63	38
	64	43
194446-63230-X	63	45
	64	50
194446-63910	51	17 -1
	63	46
	64	51
194446-64720	65	1
194446-64721	65	1 -1
	66	1
	67	1
	68	1
	69	1
194446-64722	65	1 -2
	66	1 -1
	67	1 -1
	68	1 -1
	69	1 -1
194446-64750	65	2
194446-64751	65	2 -1
	66	2
	67	2
	68	2
	69	2
194446-64752	65	2 -2
	66	2 -1
	67	2 -1
	68	2 -1
	69	2 -1
194446-65300	65	6
194446-65310	65	3
	68	3
194446-65320	65	4
194446-65321	68	4
194446-65330	65	5
194446-65340	65	7
194446-65350	65	8
194446-65351	65	8 -1
	66	4
	67	4

PARTS No.	Fig.	Ref.No.
194446-65352	65	8 -2
	66	4 -1
	67	4 -1
194446-65360	65	9
194446-65361	65	9 -1
	66	5
	67	5
194446-65460	65	10
194446-65461	65	10 -1
	66	6
	67	6
194446-65471	65	21 -1
194446-65472	65	21 -2
	67	17
194446-65550	65	24
194446-65551	65	24 -1
	66	19
	67	19
194446-65570	65	25
194446-65580	65	26
	67	20
194446-65590	65	27
194446-65591	65	27 -1
	66	21
	67	21
	68	25
	69	22
194446-65610	65	28
194446-65611	65	28 -1
194446-65630	65	30
	66	24
	67	24
194446-65660	65	31
194446-65680	65	32
194446-65681	65	32 -1
	66	26
	67	26
194446-65730	65	33
	66	27
	67	27
	74	29
194446-65731	66	27 -1
	67	27 -1
	74	29 -1
194446-65880	65	34
194446-71110-X	70	32
	71	38
194446-71111-X	70	32 -1
	71	38 -1
194446-71500-X	70	3

PARTS No.	Fig.	Ref.No.
194446-71600-X	70	7
194446-71700-X	70	6
194446-72200-X	70	11
194446-72300-X	70	17
194446-72400-X	70	14
194446-73100-X	70	18
194446-73150-U	70	38
	71	44
194446-73210-X	70	35
	71	41
194446-75210-X	72	2
194446-75720-X	72	3
	73	3
194446-81240	88	4
194446-82110	90	2
194446-83110-X	74	2
194446-83120	74	3
194446-83130	74	4
194446-83140	74	5
194446-83150	74	6
194446-83160	74	7
194446-83170	74	8
194446-83180	74	9
194446-83210-X	74	13
194446-83220-X	74	10
194446-83240	74	18 -1
194446-83250-X	74	23
194446-83260	74	24
194446-83310	56	55
	57	47
	58	49
	59	48
	74	28
194447-13100	31	31
194447-13101	31	31 -1
194447-13150	31	43 -1
194447-13210	31	42
194447-13211	31	42 -1
194447-13450-X	31	2
194447-13460	31	6
194447-13470	31	7
194447-13480	31	8
194447-13490	30	12
194447-13510	31	50
194447-13520	31	55
194447-13530	31	57
194447-13540	31	58
194447-13550	31	59
194447-13570	31	52
194447-13580	31	53

PARTS No.	Fig.	Ref.No.
194447-13590	31	54
194447-13600-X	30	1
194447-13620-X	30	8
194447-13640	30	23
194447-13650	30	22
194447-13660	30	26
194447-13670	30	27
194447-13680	30	25
194447-13710-X	30	14
194447-13720-X	30	18
194447-13721-X	30	18 -1
194447-13722-X	30	18 -2
194447-13730	30	19
194447-13740-X	30	28
194447-13750-X	30	29
194447-13760	32	18
194447-13810-X	32	16
194447-13811-X	32	16 -1
194447-13812-X	32	16 -2
194447-13820-X	32	17
194447-13821-X	32	17 -1
194447-13850	32	26
194447-13860	32	27 -1
194447-13940	32	24
194447-13950	32	28
194447-14110-X	32	37
194447-14120	32	29
194447-14130	30	31
194447-14131	30	31 -1
194447-14140	32	35
194447-14180	32	36
194447-14710-Q	77	2
		7
	78	2
		7
	82	2
		7
	83	2
		7
	86	2
		7
	87	2
		7
194447-14800	77	3
		8
	82	3
		8
	86	3
		8
194447-14810	77	4

MODEL : YM186(D)(B3730)
PC NO : 0CT10-G22801

PARTS No. INDEX

PARTS No.	Fig.	Ref.No.
194447-14810	77	9
	82	4
		9
	86	4
		9
194447-14820	77	5
		10
	82	5
		10
	86	5
		10
194447-22810-X	46	1
194447-28150	46	21 -1
194447-64720	65	35
194447-64721	65	35 -1
	66	28
	67	28
	68	32
	69	29
194447-64722	65	35 -2
	66	28 -1
	67	28 -1
	68	32 -1
	69	29 -1
194447-65550	65	38
194447-65551	65	38 -1
	66	30
	67	30
194447-65620	65	29
194447-65621	65	29 -1
	66	23
	67	23
	68	27
	69	24
194448-01500	24	29
194448-05130	28	22
194448-05140	28	23
194448-26910-X	35	45 -1
	36	41
194448-51110	58	17
194448-51120	58	50
194448-51150	58	9
	59	9
194448-51160	59	17
194448-51161	57	17 -1
194448-51162	57	17 -2
194448-51170	59	49
194448-51560-U	62	40
194448-51560-X	61	40
194448-51700-X	58	11

PARTS No.	Fig.	Ref.No.
194448-51700-X	59	11
194448-53350	61	71
	62	71
194448-53360	61	72
	62	72
194448-58810	58	15
	59	15
194448-61100-R	61	1
	62	1
194448-61250	61	2
	62	2
194448-61620	62	75
194448-61700-X	61	23
	62	23
194448-61910	61	3
	62	3
194448-62250-P	64	7
194448-62251	64	7 -1
194448-62260-P	64	8
194448-62261	64	8 -1
194448-63110	63	32 -1
194448-63120-X	64	39
194448-65300	68	6
	69	43
194448-65330	68	5
194448-65350	68	7
	69	4
194448-65360	68	8
	69	5
194448-65370	67	3
194448-65460	68	9
	69	6
194448-65470	68	20
	69	17 -1
194448-65550	68	23
	69	20
194448-65580	68	24
194448-65600	65	17 -1
	66	13
	67	13
	68	16
	69	13
194448-65620	68	14
	69	11
194448-65630	68	28
	69	25
194448-65660	68	29
	69	26
194448-65680	68	30
	69	27

PARTS No.	Fig.	Ref.No.
194448-65730	68	31
	69	28
	74	30
194448-75710-X	73	2
194449-65550	68	35
	69	32
194464-01190	23	2
	24	2
	44	1
194464-15450	33	26 F
194464-45920	35	16
	36	14
	51	6
	55	23
194464-45930	35	17
	36	15
	51	7
	55	24
194464-48220	55	35 -1
194464-48300-X	55	36
194464-48310	55	47
194464-48331	55	38
194464-48341	55	43
194464-48351	55	44
194464-48361	55	41
194464-48370	55	40
194464-48390	55	42
194464-57250	56	43
	57	37
	58	39
	59	38
194465-14210	32	38 -1
194465-14220	32	39 -1
194490-27150	44	15
194500-04710-X	25	14 -1
194500-15610	33	28 -1
194500-21400	34	37 -2
194500-21410	34	50 -1
194500-22330-X	34	49
194500-27130-X	44	11
194500-27150	44	18 -1
		49
194500-27190	44	20
194500-27211-X	44	24
194500-27212-X	44	24 -1
194500-27220	44	25
194500-27221-X	44	25 -1
194500-27240-U	44	27
194500-27250-U	44	28
194500-27260	44	30

PARTS No.	Fig.	Ref.No.
194500-27310-X	44	36
194500-27360-X	44	41
194500-31400	47	28 -1
194500-31500	47	6 -1
194500-46300	53	26 A
194500-46630	53	32 -1
194500-46640	53	33 -1
194500-48110-X	55	65
194500-48240-X	55	66
194500-48250	55	67
194500-51110	57	17
194500-51120	57	48
194500-51710	60	74
194500-61660	60	57 -1
194500-61661	60	57 -2
194500-61670-X	60	73
194500-61671	60	73 -1
194500-61680-X	44	45
194500-63210-X	63	67
194500-63230	63	45 -1
194500-65470	69	17
194500-72200-X	71	11
194500-72230-X	71	12
194500-72300-X	71	21
194500-72450-X	71	14
194500-73100-X	71	26
194501-31400	47	1 -1
194515-15150	33	5 -1
194516-13410	31	27 -1
194526-13410	31	27 -2
194550-51220	57	104
194730-57110	29	29 -1
	32	7 -1
194730-57220	29	25
		34
	32	6
		12
	33	41
194730-57241	29	23
		32
	32	4
		10
	33	40
194730-57411	29	22
		31
	32	3
		9 -1
	33	38
194740-00160	23	13
	24	13

MODEL : YM186(D)(B3730)
PC NO : 0CT10-G22801

PARTS No. INDEX

PARTS No.	Fig.	Ref.No.
194740-00322	34	28
194740-06080	34	3 -1
194740-50110	29	12
194740-55620	33	4 -2
194740-76200	63	10
194750-04400	23	24
	24	24
194750-15250	33	26 A
194750-15260	33	26 B
194750-15270	33	26 C
194750-15280	33	26 D
194750-15290	33	26 E
194750-15520	33	22 -1
194800-65350	65	26 -1
	66	39
	67	39
	69	42
194802-65370	67	3 -1
194990-20170	34	30
	44	2 -1
194990-20180	55	16
194990-22030	63	11 -1
194990-22040	25	16
	56	8
	57	8
	58	8
		109
	59	8
		105
194990-22050	2	8 -1
		38
	4	30 -1
	44	4 -1
	56	106
	57	89
	60	71
	61	70
	62	70
	89	12
194990-22120	60	6 -1
		78
	61	6 -1
		74
	62	6
		48
	65	47
	66	38
	67	38
	68	43
	69	41

PARTS No.	Fig.	Ref.No.
194990-22130	44	3 -1
	56	12
		22
		69
	57	61
	58	63
	59	62
	60	43
	61	42
	62	42
	63	34
	64	40
194990-22140	44	5 -1
	60	61
	61	60
	62	60
	63	9
		22
		31
		64
	64	10
		28
		37
		69
194990-22830	29	27
	32	14
194990-22840	29	28
	32	15
194990-42710	34	47
194990-52600	42	34
194990-75170	35	19
	36	17
194990-85561	43	37
195040-13320	42	36
195080-15060	70	9 A
	71	9 A
198220-01261	23	6 -1
	24	6 -1
198220-26410	42	12 -1
198220-26420	42	13 -1
1A1040-26170	52	3
1A1040-28820	31	38
1A1040-36040	49	25
1A1050-34250	78	5
		10
	83	5
		10
	87	5
		10
1C6053-26020	44	8

PARTS No.	Fig.	Ref.No.
1C6053-26020	63	68
	64	72
1C6053-26030	64	71
1C6054-82140	54	20 -1
1C6120-63190	54	21
1C6140-25210	49	24
1E6140-53070	35	14
1E6141-53160	35	29
		29 -1
	36	27
1E6190-55120	38	10
1E6190-55660	39	25
1E6190-55710	39	26
43400-500390	13	39
		54
	21	42
43400-500410	2	9
	21	9
43400-500450	1	32 -1
	14	27
	21	5 -1
		44
705311-23100	8	10
705311-23600	8	14
711100-51540	11	18
721000-21700	7	1 -1
721000-21701	7	1 -2
721257-55540	13	2
721450-01540	1	29
721450-02500	1	36
721450-02611	1	42
721450-02612	1	42 -1
721450-02621	1	46
721450-02622	1	46 -1
721450-11650	3	30
721450-11660	3	36
721450-11700	3	1
721450-21700	7	1
721450-22500	8	3
	22	3
721450-61100	14	1
721450-61520	14	1 -1
721450-66500	14	5
721454-01560	1	1
721454-01561	1	1 -1
721454-01562	1	1 -2
721454-01563	1	1 -3
721454-01610	2	1
721454-01611	2	1 -1
721454-01612	2	1 -2

PARTS No.	Fig.	Ref.No.
721454-01613	2	1 A
721454-11520	3	52
721454-11521	3	52 -1
721454-51700	11	1
721454-92500	22	1 A
721454-92600	21	1 A
721454-92601	21	1 A-1
721454-92610	21	1 B
721454-92740	22	1 B
724550-51520	11	16
724950-53100	12	1
728171-23100	8	10 -1
794081-54101	57	78
	89	1
794130-71410	70	10
		21
	71	9
		17
		24
		27
	73	5
794150-12301	29	20
	32	1
794150-22150	34	44
794240-12900-Q	81	1
	85	1
794275-53401	56	75
	57	65
794275-54100	56	88
794340-11900	78	3 -1
		8
	83	3
		8
	87	3
		8
794440-25400	41	1
794440-25410	41	14
794446-12900-Q	80	1
	84	1
794446-34500	81	11
	83	11
	85	11
	87	11
794446-34600	81	16
	83	16
	85	16
	87	16
794446-43200	51	1
794446-71100-X	70	2
794446-74600-X	70	22

MODEL : YM186(D)(B3730)
PC NO : 0CT10-G22801

PARTS No. INDEX

PARTS No.	Fig.	Ref.No.
794446-74600-X	71	28
794446-75700-X	72	1
794446-81200	88	1
794446-82110-R	90	1
794446-82111	90	1 -1
794446-83100-X	74	1
794447-14700-Q	77	1
	82	1
	86	1
794447-14710-Q	78	1
	83	1
	87	1
794447-14800-Q	77	6
	82	6
	86	6
794447-14810-Q	78	6
	83	6
	87	6
794448-34700	80	6 -1
	82	11 -1
	84	6
	86	11
794448-34701	80	6 -2
	82	11 -2
	86	11 -1
794448-34800	80	11 -1
	82	16 -1
	84	11
	86	16
794448-34801	80	11 -2
	82	16 -2
	86	16 -1
794448-75700-X	73	1
794500-15100	33	42
794500-71100-X	71	1
794500-72100-X	71	10
794500-72200-X	71	20
794500-73100-X	71	25
794730-57112	29	29
	32	7
94210M-06900	19	18
94210M-13751	19	4
94210M-21932	19	9
94210M-32983	19	7
94210M-42801	19	6
94210M-42802	19	21
94210M-42927	19	4 -1
94210M-42929	19	6 -1
94210M-51416	19	11
94210M-51417	19	12

PARTS No.	Fig.	Ref.No.
94210M-51418	19	13
94210M-86025	19	8
94210M-86124	19	5
		16
94210M-86372	19	10
94210M-96717	19	17
X21141360	18	16
X21142742	18	37
X211432001	18	11
X21143454	18	27
X21143963	18	22
X21144314	18	18
X21144661	18	21
X211453002	18	14
X21145312	18	13
X21145313	18	17
X21145352	18	15
X211455003	18	19
X211456009	18	20
X21146815	18	32
X21147155	18	7
X21147215	18	12
X21148110	18	3
X21148652	18	28
X211491001	18	2
X211497004	18	31 -1
X6201SD	20	21
XB444001A	20	20
XL1151403	20	14
XL1151552	20	17
XL1251801	20	18
XL1251802	20	19
XL1255310A	20	8
XL1255400	20	13
XL1256338	20	10
XL1258320	20	9
XL1307404Y	20	15
XL135N1300	20	4
XL135N1301	20	5
XL135N1302	20	6
XL135N1303	20	7
XL135N2200	20	3
XLT135N1100	20	2
XM069000000	19	18 -1
XM329830000	19	7 -1
XM428020000	19	21 -1
XM429270000	19	4 -2
XM429290000	19	6 -2
XM514160000	19	11 -1
XM514170000	19	12 -1

PARTS No.	Fig.	Ref.No.
XM514180000	19	13 -1
XM622270000	19	3 -1
XM860250000	19	8 -1
XM861240000	19	5 -2
		16 -2
XM967170000	19	17 -1
YTI446-12800	76	1
YTI446-12810	76	3
YTI446-12820	76	4
YTI446-12830	76	5
YTI446-12850	76	2
YTI446-12900	75	1
YTI446-12910	75	7
YTI446-12920	75	8
YTI446-12930	75	9
YTI446-12950	75	2
YTI446-12960	75	3
YTI446-12970	75	4
YTI446-12980	75	5
YTI446-12990	75	6
YTI446-34700	76	6
YTI446-34710	76	8
		13
YTI446-34720	76	9
		14
YTI446-34730	76	10
		15
YTI446-34750	76	11 -1
YTI446-34810	76	7
		12
YTI446-34860	75	11
		16
	77	12
		17
	78	12
		17
YTI446-34900	75	10
	77	11
YTI446-34910	75	12
		17
	77	13
		18
YTI446-34920	75	13
		18
	77	14
		19
YTI446-34930	75	14
		19
	77	15
		20

PARTS No.	Fig.	Ref.No.
YTI446-34950	75	15
	77	16
YTI446-59100	79	1
YTI446-59110	79	2
YTI446-59120	79	3
YTI446-59140	79	4
YTI446-59150	79	5
YTI446-59160	79	6
YTI447-34700	78	11
YTI447-34710	78	13
		18
YTI447-34720	78	14
		19
YTI447-34730	78	15
		20
YTI447-34750	78	16

YANMAR

YANMAR CO.,LTD.