REVISIONS				
ZONE	REV.	DESCRIPTION	DATE	APPR
	A	INITIAL RELEASE	4/1/16	MCW

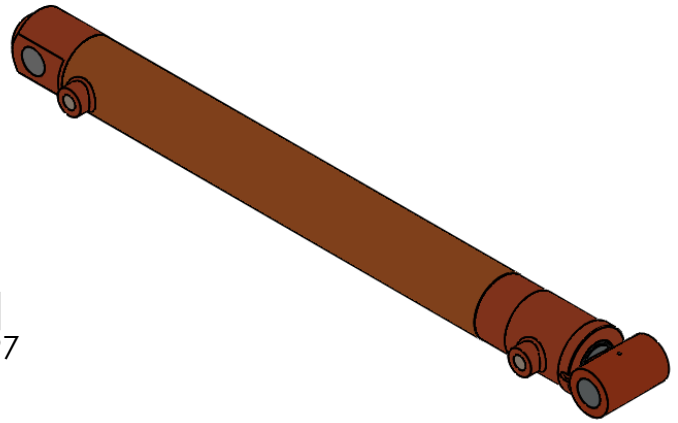

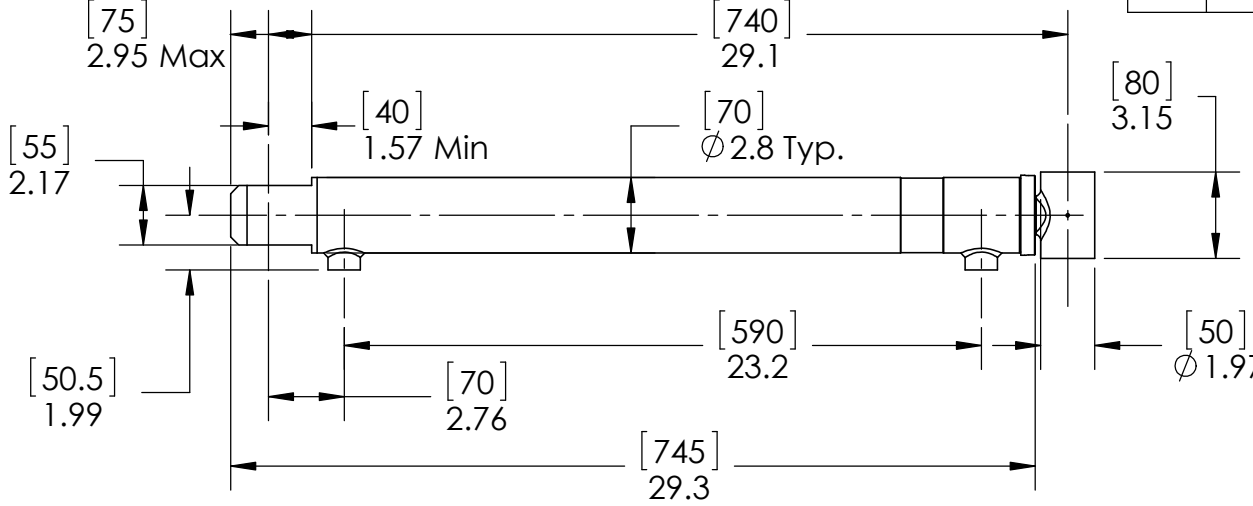

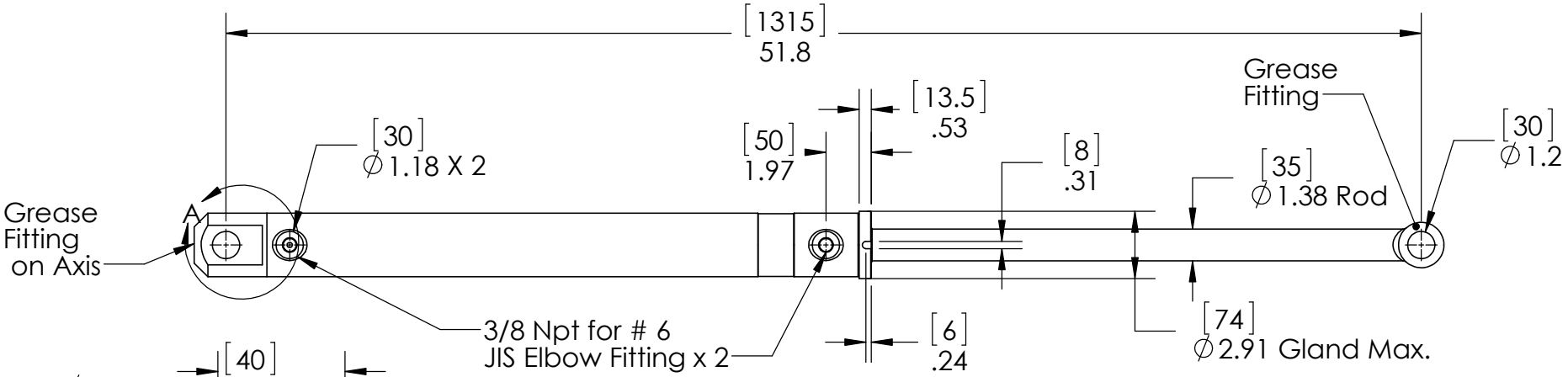

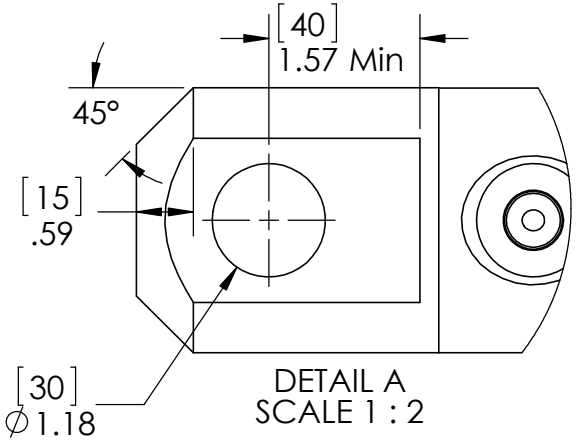

Notes:
3000 PSI rated.
Chrome plated Rod.

UNLESS OTHERWISE SPECIFIED DIMENSIONS ARE IN INCHES	
TOLERANCES	
FRACTIONS +/- 1/32 ANGLES +/- 1/2°	DECIMALS .X = .030 .XX = .010 .XXX = .005 .XXXX = .001
BREAK ALL SHARP EDGES 1/64 X 45°	
DRAWN BY: mcw	
ENG. APPROVAL: ENG APP	
MANF. APPROVAL: MANF APP	

PROPRIETARY AND CONFIDENTIAL
THE INFORMATION CONTAINED IN THIS DRAWING IS THE SOLE PROPERTY OF Mike Witzgall. ANY REPRODUCTION IN PART OR AS A WHOLE WITHOUT THE WRITTEN PERMISSION OF Michael Witzgall IS PROHIBITED.

Questions? Please contact
Michael Witzgall (603)-818-9083 (C)
(603)-539-4538 (Work)
<mailto:mike69440@metrocast.net>

TITLE: L39 Lift Cylinder Replace OS 60mm Bore

SIZE	DWG. NO.	REV
A	L39 Lift Cylinder Replace OS	A

DATE:	SCALE: 1:7	SHEET 1 OF 1
12-16-14		