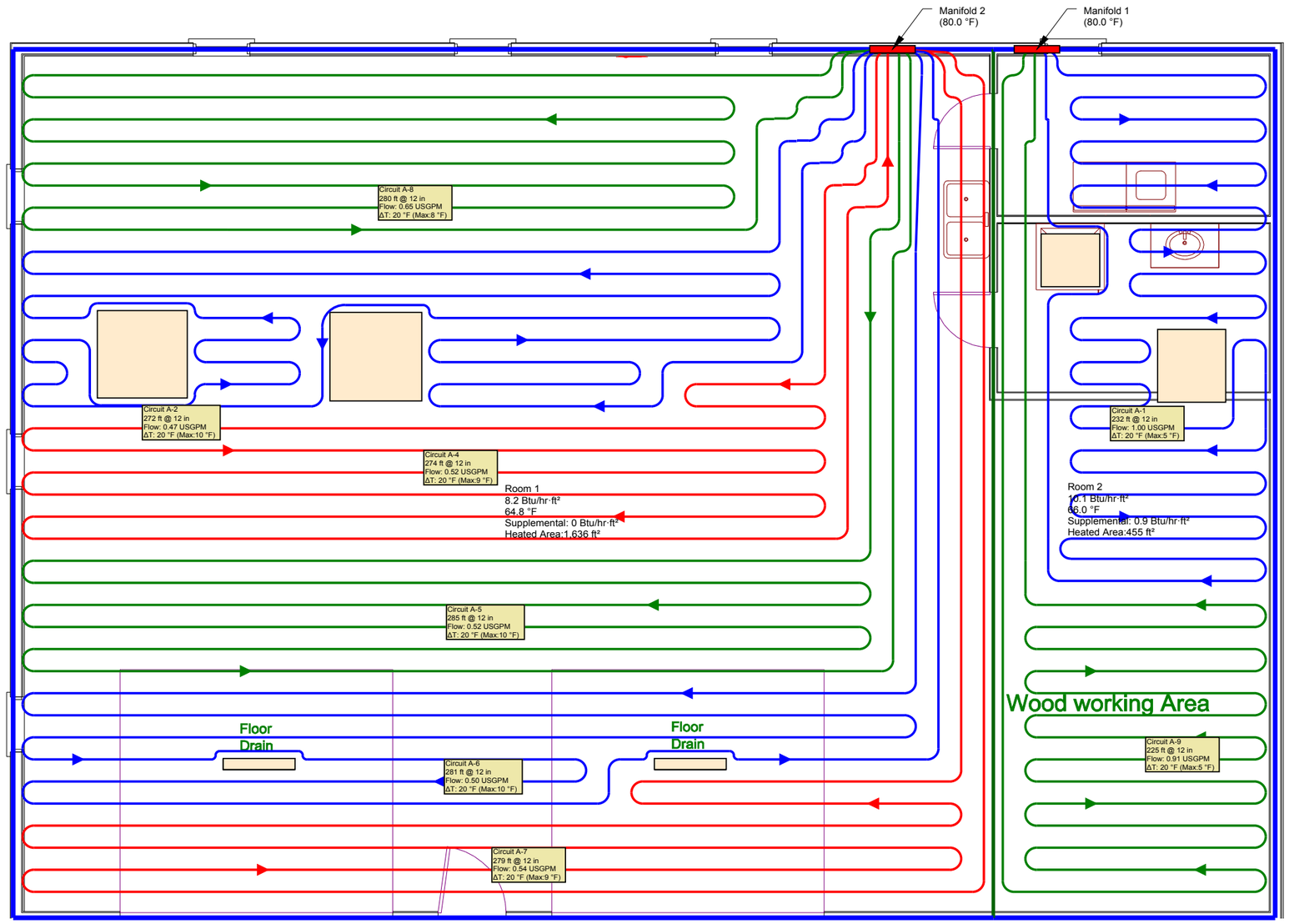

LoopCAD® 2012

Note: Details of the tubing bend radius have been simplified for clarity. Consult tubing manufacturer for specific bend radius recommendations.
Created using LoopCAD 2012 3.0.0280

Project Number: One
Floorplan: Ground Floor (Fit To Page)
Saturday, September 29, 2012