MIDLAND

ZIP SEEDER

ZF6

OWNERS MANUAL

Front Hopper Fert.
Rear Hopper Seeds

Midland Manufacturing Company

Division of Northcote Corporation
Electric Mills, Mississippi 39329 / (601) 476-8401
Telex: 504-156 / Answer Back MMCO ELML

FEMA

WARRANTY

Midland Manufacturing Company warrants each new machine sold to be free from defects in material and workmanship for a period of TWELVE MONTHS (1 year) from date of retail sale. The obligation under this warranty, statutory or otherwise, is limited to the replacement or repair at the Manufacturer's factory or at a point designated by the Manufacturer of such part or parts as shall appear to the Manufacturer upon inspection at such point to have been defective in material or workmanship. This warranty does not obligate the Manufacturer to bear the cost of labor or transportation charges in connection with the replacement or repair of defective parts. Neither does it apply to units that have had unauthorized alterations, damaged by accident, or have been abused or misused beyond the designed capabilities. The Manufacturer shall in no event be liable for consequential damages of contingent liabilities arising out of the failure of any units or parts to operate properly. The Manufacturer reserves the right to make design changes at any time without obligation. No expressed, implied or statutory warranty other than herein set forth is made or authorized to be made by the Manufacturer.

In the case of Goods leased or rented by the Customer, the Company's obligation under the warranties is solely to the Customer and any obligation to a Lessee with respect to such Goods or their performance will be that of the Customer. It is further understood that where units are leased at any level the warranty period is limited to ninety (90) days only.

The Company's sole obligation to the Customer with respect to Goods or their performance is as stated above. THE COMPANY DISCLAIMS AND THE CUSTOMER WAIVES ANY IMPLIED OR STATUTORY OBLIGATION, CONDITION OR WARRANTY GOING BEYOND SUCH OBLIGATION, INCLUDING IN SUCH DISCLAIMER AND WAIVER THE IMPLIED WARRANTIES OF MERCHANTABILITY AND FITNESS. All items not included in the applicable New Equipment Warranties, or excluded by the terms thereof, are sold to the Customer without any warranty or obligation by the Company.

CONDITIONS OF SALE SUBJECT TO CHANGE AT ANY TIME.

INTRODUCTION

The Midland Zip Seeder is a sod seeding tool developed to take better advantage of modern farming techniques. Functions such as deep band application of fertilizer and mechanical sod destruction are eliminated in the Zip Seeder. The Zip Seeder has a drag blade opener that relies on the machine weight for soil penetration, therefore, the depth of seed placement and the cover of seed is dependent on soil condition, sod condition, and gage wheel or hitch control.

Where soil and sod conditions are favorable for Zip Seeder use the following advantages can be realized:

1) Coulters and drag openers ride over underground hazards that cause delays with shear pin trip boots.
2) The lower draft load and shallow penetration permit higher operating speeds.
3) The nine-inch row spacing is more desirable for some winter grasses and legumes.
4) The narrow opener and zig-zag packer produce much less disturbance of established sod.

MIDLAND ZIP SEEDER SPECIFICATIONS

MODEL		EST. WT.
Z-6 10001	6 Boot "Module" on 9" spacing, 10-bushel seed hopper, 12" smooth coulters, less hitch and hopper lid.	850 #
ZF-6 10002	6 Boot "Module" on 9" spacing, 7-bushel seed hopper (rear) and 500 to 650 # fertilizer hopper (front). 12" smooth coulters, less hitch and hopper lid.	975 #

ACCESSORY SPECIFICATIONS

10120	C-1 Category one. Three point hitch kit with manual shutoff for Z-6 or ZF-6 modules.
011135	3" x 8" hydraulic cylinder.
10282	Oscillating mount pull kit for two Z-6 or two ZF-6 modules. Requires 8" stroke cylinder (not included). Requires two 15" tires (not included).
04002	9.5L x 15" tire (two required for pull kit).
04003	9.5 x 15" tube (two required for pull kit).
10506	6 Row Small Seeder, one bushel capacity (for Z-6 or ZF-6).
10440	Z-6 Hopper Lid.
10441	ZF-6 Hopper Lid.
02304	Heavy Duty ¾" Coulters (recommended for rocky conditions)

FEATURES

Gang mounted coulters rotate as a team to reduce skips and stalls in tough sod.
Heat treated drag opener blades are designed to ride over underground hazards without tripping.
Zig-Zag packer teeth improve seed cover and provide positive agitator drive.
Eccentric drive linkage eliminates chain problems and provides direct agitator oscillation.
Agitator, packer and coulter shafts are ball bearing mounted for higher speed operation.
Large hopper can be tilted back for cleaning and shutter servicing.
Simple two position agitator adjustment provides a close clearance setting for bearded or trashy seed; or a high clearance (approximately ¼") setting to reduce cracking of large or brittle seed.
Operating speeds up to 8 mph are practical on smooth sod. At slow speeds the Zip Seeder can be used effectively in rock or root infested ground.
Front hopper on ZF-6 module can be used to apply starter fertilizer.

ACCESSORY FEATURES

Two Z-6 or ZF-6 modules can be installed on the 10282 oscillating mount pull kit. With the addition of an 8" stroke remote cylinder (and tires) this pull kit features automatic hopper shut-off when the machine is raised and automatic opening when the machine is lowered. The oscillating mount allows each module to independently conform to the ground contour.

The 10506 Small Seeder attachment (legume box) can be easily installed on a Z-6 or ZF-6 module by drilling four holes in the hopper. The Small Seeder parts illustration details the mounting dimensions and set-up for both the Z-6 and ZF-6. The Small Seeder comes with either left hand or right hand drive to provide operating clearance on 10282 pull kit installations.

SET-UP INSTRUCTIONS: CATEGORY I HITCH KIT

The C-1 (Kit No. 10120) includes the bolt-on parts and manual shutoff lever necessary for a Z-6 or ZF-6 to operate with a standard Category "I" three point hitch tractor. This is shown assembled in figure 1.below.

a) Assemble the hitch kit parts to the seeder frame, and the shutoff lever to the shutter control weldment. Note that the four 5/8" bolts are installed with the head underneath.
b) Attach the seeder to the tractor and level the unit with tractor toplink and lower links.
c) Read calibration, trouble shooting and maintenance sections.

Figure 1

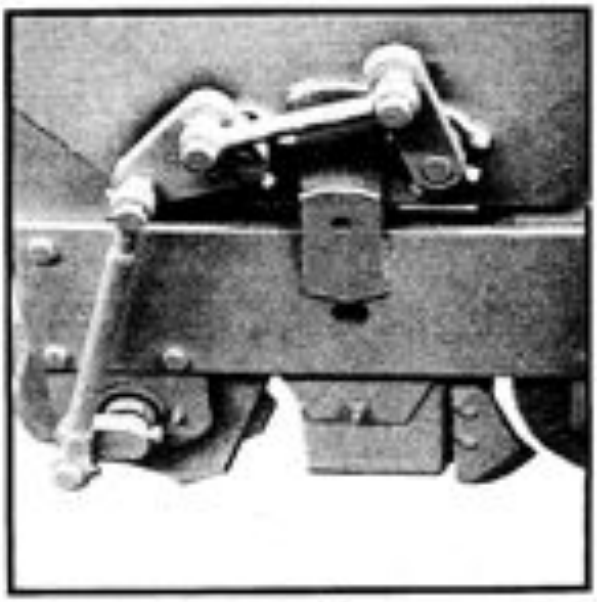

Figure 2

SET-UP INSTRUCTIONS: OSCILLATING PULL KIT

The oscillating pull kit (10282) includes the tongue, rockshaft and hardware required to mount two Z-6 or ZF-6 modules. An 8" stroke remote cylinder and two tires are required for operation of this unit.

NOTE: To avoid damage and unnecessary rework carefully follow the assembly sequence as outlined.

a) Bolt the pivot brackets to the basic units with the bolt heads up. NOTE: The Z-12 or ZF-12 seeders are shipped with one L.H. drive and one R.H. drive module and must be assembled with the drive linkage to the outside.
b) Put the rockshaft and tongue assembly onto the basic units and secure the pivot brackets to this assembly with the two pins and cotter pins provided.
c) Install wheels and tires.

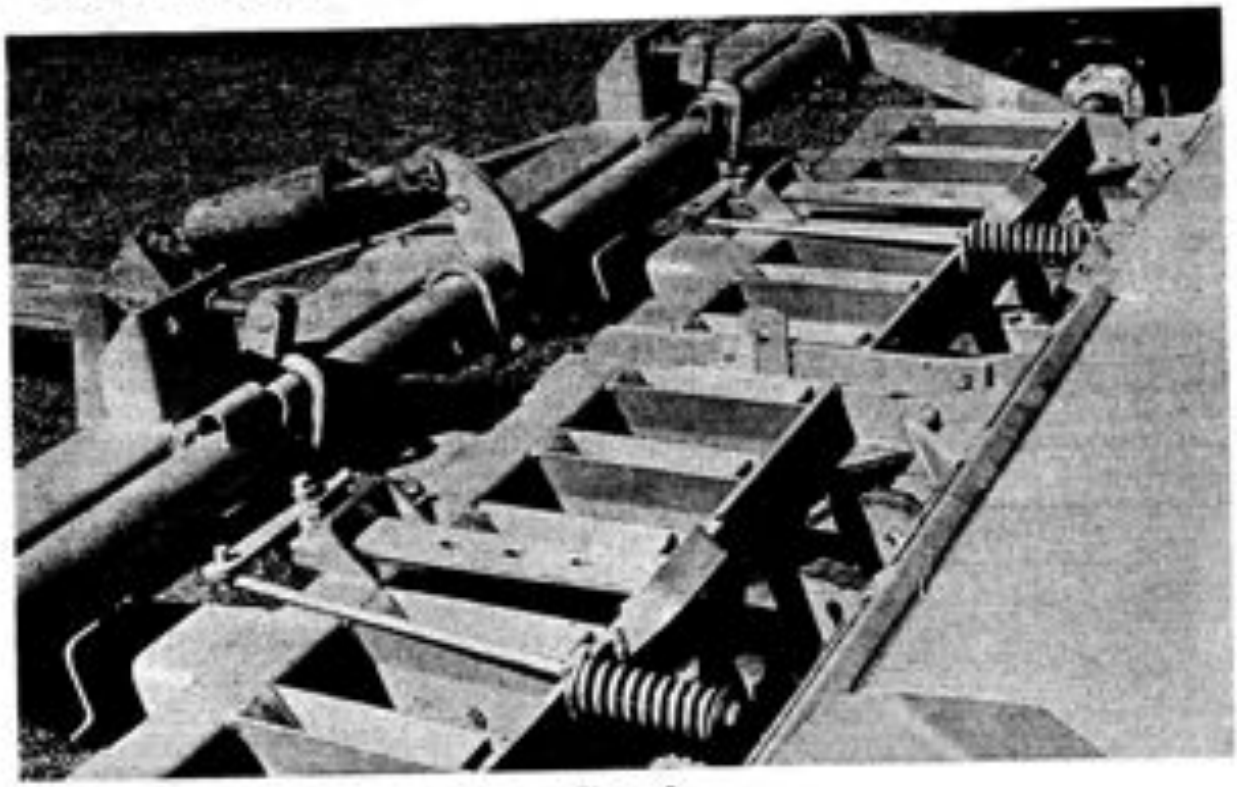

Figure 3

d) Install parts 42-48, 25 and 7 shown on the 10282 parts illustration, following Figure 3 above. Right and left units are assembled identically. Tighten nut 7 enough to slightly compress the spring.
e) Install the cylinder, retract fully (raise wheels). Align cam follower with crank notch and loosely install eye bolt through tongue bracket hole.
f) Tilt hoppers forward with shutter dowels in slots in the shutter control plate. NOTE: When tilting the hopper(s) forward make sure the drive crank is not "over centered." It must be in the position shown in Figure "2."
g) Extend cylinder fully (transport position). Tighten cam followers only enough to close the shutters. Lock jam nuts securely. CAUTION: Overtightening springs or cam followers will damage the machine.
h) Hook up to tractor with hitch located in the appropriate hole for level operation. Make sure seed and fertilizer calibration instruction decals are on hoppers.
i) Be sure the agitator driven crank is to the rear. On ZF modules the front hopper agitator driven crank should be connected with the cross link in the upper hole (See Figure 2 for installation of drive linkage).

MAINTENANCE

DAILY:

1) Lubricate and inspect agitator drive linkage. Inspect furrow openers and replace as needed for good operation.
2) Inspect coulters, axle and bearings.
3) Clean and lubricate for free operation shutter control mechanism and shutter bars. To avoid grit accumulation use a good dry lubricant such as aerosol moly or graphite.
4) Immediately after use of any corrosive material (some types of seed, fertilizer, lime, etc.) wash the hopper, shutter controls and interior of the boots. Spray paint or lubricate any bare metal areas.

SEASONALLY:

Before use of a seeder that has been stored for some time:

1) Tilt the hopper(s) back and remove the shutter bar(s), control arm weldment and the shutter control plate.
2) Remove any excess paint or corrosion that could interfere with free movement.
3) Lubricate (dry preferred) all contact areas and reassemble.
4) Always store the machine in a dry place after cleaning and painting (or oil coating) all bare metal areas.

TROUBLESHOOTING

(Number) Problem
(Letter) Possible Correction

(1) Boot openers do not penetrate the soil.
- (a) Level the unit so that coulters, packers and openers all penetrate about the same depth.
- (b) Raise coulter shaft. Keep hoppers near full for maximum weight.
- (c) Check three point linkage for down restriction. Raise transport wheels clear of ground.
- (d) Excessive sod density or hard tight soils are not favorable seeding conditions.

(2) Seeder does not penetrate sod or trash on ground.
- (a) Do not clip or mow weeds, tall grass or light brush before zip seeding. If hay mowing or brush clipping is necessary, the clippings and trash must be removed.
- (b) Lower coulter shaft.
- (c) Same as (1) - (b), (c) and (d).

(3) Coulters plug and rake.
- (a) Increase operating speed. Eight mph is not too fast if all conditions safely permit.
- (b) Remove excessive loose trash, stalks or clippings.

(4) Packers and agitators do not rotate.
- (a) Check packers, agitator blades, bearings and linkage for adjustment, damage and wear.
- (b) Tilt seeder back to concentrate weight on the packers.

(5) Shutters do not operate.
- (a) Make sure dowel pins are engaged in holes.
- (b) Go through seasonal maintenance procedure.
- (c) Repair or replace worn or damaged parts.

(6) Insufficient soil contact or coverage for the seed being used.
- (a) See item (1) above.
- (b) In normal conditions about 1½ Bu. per acre is maximum. Most seed applied above this rate will not be pressed into the furrow by the packer.

(7) Agitator paddles crack or damage the seed.
- (a) Adjust agitator shaft with short paddle down.

CALIBRATION AND SEED RATES (MODULES)

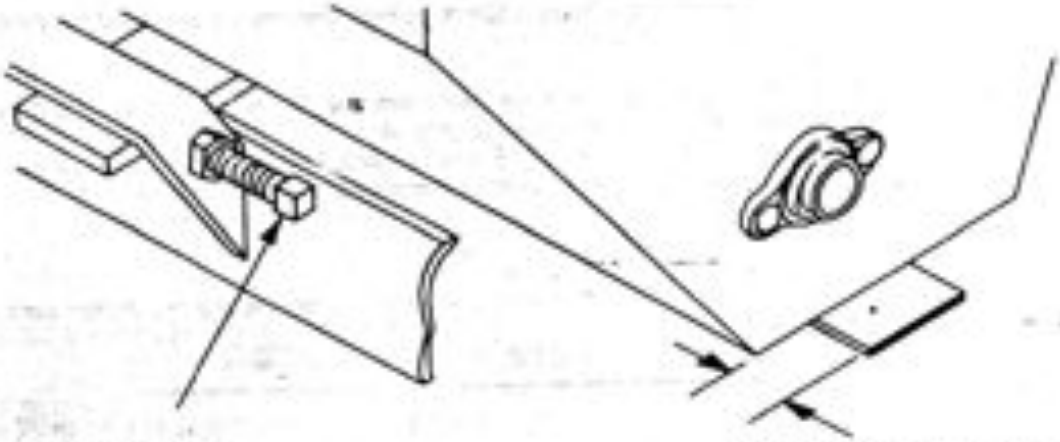

(A) SET SCREW

MEASURE SHUTTER END EXTENDED PAST HOPPER END TO READ OPENING IN INCHES.

To Calibrate: (1) Turn set screw (A) to the estimated opening for the desired feed rate. (2) Close shutter. (3) Fill hopper level full (or Level to The 45 Degree Brake Line). (4) Open shutter and run seeder at normal speed for 1/10 acre (960 feet - Z-6 & ZF-6). (5) Close shutter. (6) Refill hopper to step (3) level, multiply material used by 10 For actual pounds per acre feed rate. (7) Make corrections indicated for step (1), then repeat steps (2) Thru (6) if necessary.

SEED NAME	Suggested Seed Rate Pounds Per Acre	Z-6 & ZF-6 Shutter Opening (Inches - Estimated)
Barley	90 - 100	1/4
Bluegrass Kentucky	15 - 30	1/4 - 3/8
Bromegrass	10 - 15	3/8 - 1/2
Fescue	15 - 50	1/4 - 3/8
Lespedeza Korean	15 - 50	1/8 - 1/4
Millet (Forage)	30 - 40	1/8
Millet (Pearl)	10 - 15	1/8
Oats	70 - 90	3/8 - 1/2
Orchard Grass	20 - 25	3/8
Rye	50 - 90	1/8 - 1/4
Ryegrass	10 - 20	1/4
Sudan Grass	20 - 25	1/8
Soybeans	60	1/4
Wheat	90 - 120	1/8 - 1/4

ZF-6 Fertilizer Settings	1/8	1/4	3/8	1/2	5/8
Ammonium Nitrate Lbs. / Acre	140	350	700		
Mixed Fertilizer Lbs. / Acre		210	420	700	1100
Phosphate Super Lbs. / Acre		275	480	900	

Notice: All settings and feed rates shown above are estimated. To avoid light or wasteful applications always calibrate each seeder unit for each seed or fertilizer used.

SMALL SEEDER SET-UP

Figure 4 illustrates the proper set up of the small seeder. The small seeder parts illustration drawing 10506 gives dimensions and shows the difference between the Z-6 and ZF-6 mountings.

SMALL SEEDER OPERATION AND MAINTENANCE

1. The small seeder feed mechanism uses a fixed feed roll housing and sliding feed gates with constant rotational speed. Calibration and rate information is shown below.

2. Very little maintenance is required other than normal care of the chain drive and daily lubrication of the idler sprocket.

3. A hopper lid is provided; it should be used at all times since damp or wet seed will not feed reliably.

4. Steps (1) and (2) of the calibration instructions below are particularly important. All six feed rolls and feed gates must be in the same relative position to the feed roll housings at any overall adjustment position of the shaft as indicated by the pointer mounted on the end.

CALIBRATION AND SEED RATES (SMALL SEEDER)

SEED NAME	Suggested Seed Rate (lbs. per acre)	Z Model Small Seeder (estimated Opening)
Alfalfa	20	2-¼
Clover, Alsike	6	¼
Clover, Black Medic	4	¼
Clover, Ladino	2	¼
Clover, Medium Red	14	1-¼
Clover, White	4	½
Clover, Crimson	20	2
Bermuda (Hulled)	6	1-¼
Lespedeza, Korean	6	1-¼
Timothy	5	½
Trefoil, Birdsfoot	5	½

Figure 4

NOTE: All settings and feed rates approximate. Calibrate each seeder for particular seed used.

CALIBRATION

(1) Fully close all feed rolls and lock on drive shaft.
(2) Set adjustment pointer to zero on seed rate plate, lock on drive shaft, loosen drive shaft screw on driven sprocket, then move pointer to opening shown in table. Retighten drive shaft screw on driven sprocket.
(3) Fill hopper to known reference level.
(4) Run for 1/10 acre; (960'-Z Models)
(5) Refill hopper to original level, multiply material added by 10 for actual feed rate.
(6) Correct feed roll openings to desired rate.

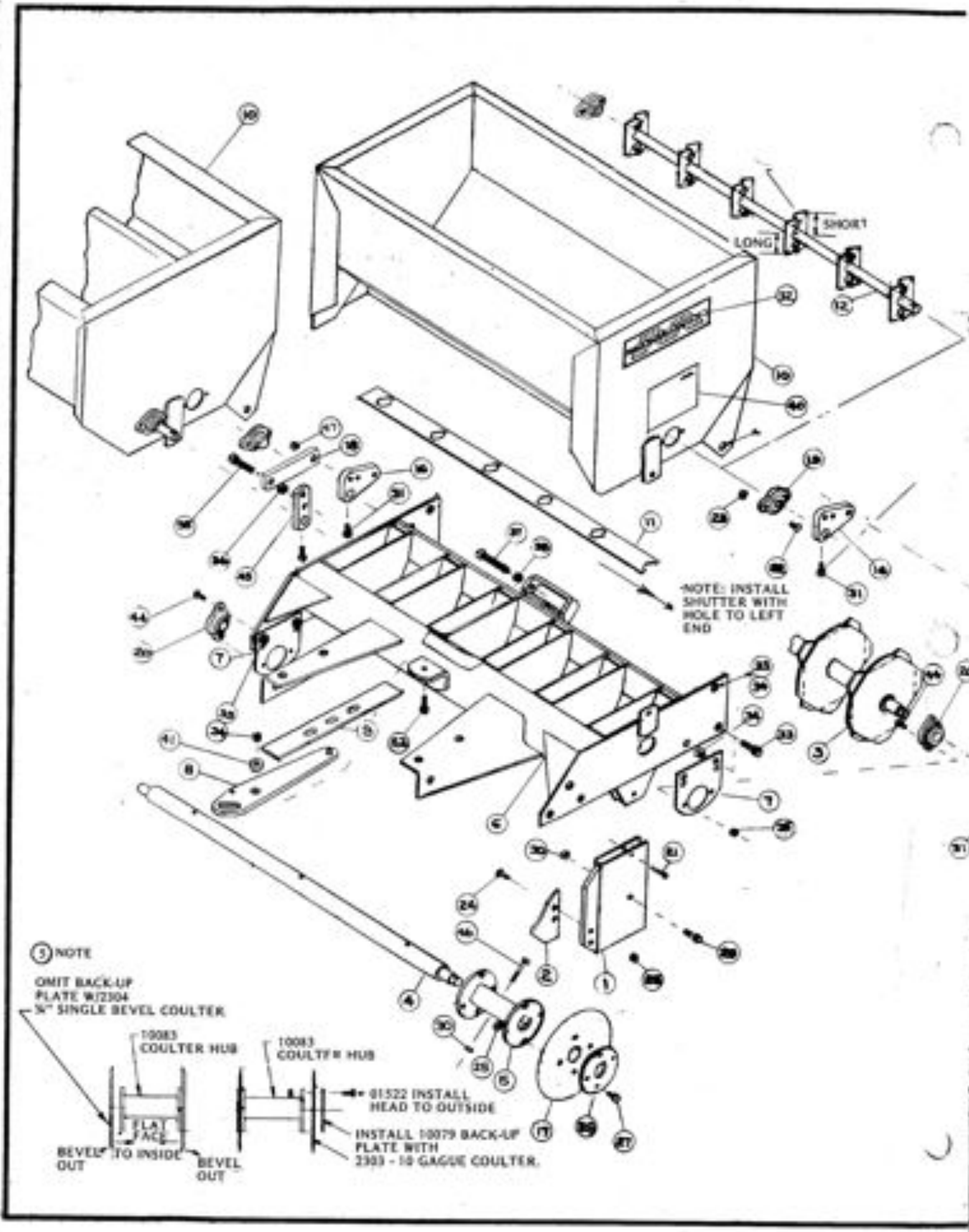
SHORT
LONG
NOTE: INSTALL SHUTTER WITH HOLE TO LEFT END
(5) NOTE
OMIT BACK-UP PLATE W/2304 5/8" SINGLE BEVEL COULTER
10083 COULTER HUB
10083 COULTER HUB
01522 INSTALL HEAD TO OUTSIDE
INSTALL 10079 BACK-UP PLATE WITH 2303 - 10 GAGUE COULTER.
BEVEL OUT
FLAT FACE TO INSIDE
BEVEL OUT

Midland Manufacturing Company Inc.

Electric Mills, Mississippi 39329 A.C. 601 476-3061

Seed Name	Suggested Seed Rate Pounds Per Acre	Z-6 & ZF-6 Shutter Opening (Inches - estimated)	M-4 Shutter Opening (Inches - estimated)	Z-6, ZF-6 & M-4 Feed Rate
Barley	90 -100	1/4	3/8	
Bluegrass Kentucky	15 -30	1/4-3/8	3/8	
Bromegrass	10 -15	3/8-1/2	1/2	
Fescue	15 -50	1/4-3/8	1/4-3/8	
Lespedeza Korean	15 -50	1/8-1/4	1/4-3/8	
Millet (forage)	30 -40	1/8	1/8-1/4	
Millet (pearl)	10 -15	1/8	1/8	
Oats	70 -90	3/8-1/2	1/2-5/8	
Orchard Grass	20 -25	3/8	3/8-1/2	
Rye	50 -90	1/8-1/4	1/4	
Ryegrass	10 -20	1/4	1/4-3/8	
Sudan Grass	20 -25	1/8	1/4	
Soybeans	60	1/4	3/8	
Wheat	90 -120	1/8-1/4	1/4-3/8	

ZF-6 Fertilizer setting	1/8	1/4	3/8	1/2	5/8	
Ammonium Nitrate Lbs./Acre	140	350	700			
Mixed Fertilizer Lbs./Acre	210	420	700	1100		
Phosphate Super Lbs./Acre	275	480	900			
M-4 Fertilizer setting	1/8	1/4	3/8	1/2	5/8	
Ammonium Nitrate Lbs./Acre	85	200	400			
Mixed Fertilizer Lbs./Acre	125	250	420	660		
Phosphate Super Lbs./Acre	165	285	550			

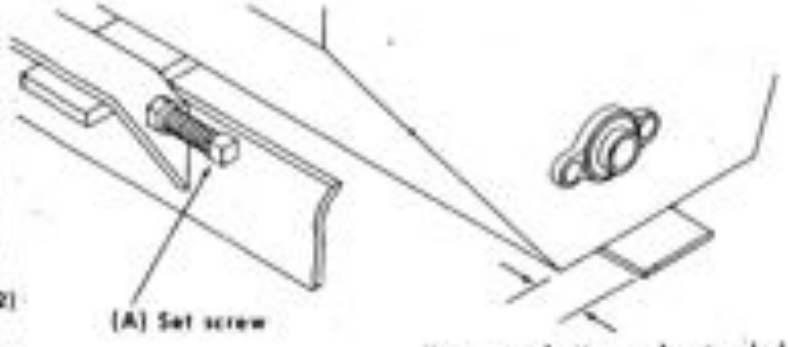

To Calibrate: (1) Turn set screw (A) to adjust shutter to the estimated opening for the desired feed rate. (2) Close shutter. (3) Fill hopper level full (or level to the 45 degree brake line). (4) Open shutter and run seeder at normal speed for 1/10 Acre (960 FEET -Z-6 & ZF-6) (730 feet M-4). (5) Close shutter. (6) Refill hopper to step (3) level, Multiply material used by 10 for actual pounds per acre feed rate. (7) Make corrections indicated for step (1), then repeat steps (2) thru (6) if necessary.

Notice: All settings and feed rates shown above are estimated. To avoid light or wasteful applications always calibrate each seeder unit for each seed or fertilizer used.

Midland Manufacturing Company Inc. ®

Electric Mills, Mississippi 39329 A.C. 601 476-3061

SEED NAME	Suggested Seed Rate (Pounds per acre)	Seeder for Z-6, ZF-6 (estimated opening)	Seeder for M-4 (estimated opening) Small Seeder Feed Rate
Alfalfa	20	2¼	4¾
Clover, Alsike	6	¾	1½
Clover, Black Medic	4	¼	¾
Clover, Ladino	2	¼	½
Clover, Medium Red	14	1¼	2¾
Clover, White	4	½	1
Clover, Crimson	0	2	4¼
Bermuda (Hulled)	6	1¼	2½
Lespedeza, Korean	6	1½	3
Timothy	5	½	1¼
Trefoil, Birdsfoot	5	½	1

To Calibrate: (1) Set feed rolls to fully closed. (2) Zero adjustment pointer, then set to estimated opening in table. (3) Fill hopper full or level to 45° bend line. (4) Run for 1/10 acre. (960 feet-Z-6 & ZF-6). (730 feet-M-4). (5) Refill hopper to step (3) level, multiply material used by 10 for actual pounds per acre feed rate. (6) Correct feed roll opening to obtain desired rate.

Notice: All settings and feed rates shown above are estimated. To avoid light or wasteful applications, always calibrate each seeder unit for each seed or fertilizer used.

Installation instructions found in small seeder owner's manual.

ATG 10552

NOTE: TIGHTEN SET SCREW WITH AGITATOR SHAFT FLUSH TO TO OUTER CRANK FACE: SET SCREW SHOULD ENGAGE HOLE CROSS-DRILLED IN SHAFT.

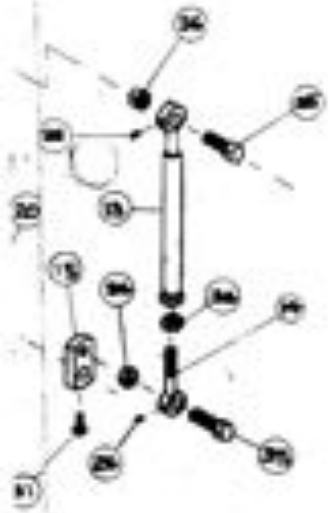

ITEM #	E.A. 1/10 SERVICE REQ.	(A) ZF-6 10002	(A) Z-6 10001	PART #	DESCRIPTION
1	1	6	6	10010	"Z" Boot Weldment
2	30	6	6	10015-B	"Z" Opener--Trail Type"(10015-A Old Style Reversible)
3		1	1	10015	"Z-6" Packer Axle Weldment
4	1	1	1	10028	"Z" Coulter Axle
5	1	3	3	10083	Coulter Hub, Double (Old Single Hub was 10076)
6		1	1	10040	"Z-6" Frame Weldment
7	2	4	4	10070	"Z" Bearing Mounting Plate
8		1	1	10071	Shutter Control Arm Weldment
9		1	1	10075	Shutter Control Plate
10			1	10080	"Z-6" Hopper Weldment
10		1		10082	"ZF-6" Hopper Weldment
11	1	2	1	10100	6 Hole (9") Shutter Bar
12	1	2	1	10104	6 Blade (9") Agitator Shaft Weldment
13	1	1	1	10205	Drive Link Weldment (10204 Assembly/with/Eyes)
14	5	1	1	10207	Drive Link Eye Bolt 3/4 UNC x 3 1/2
15	1	1	1	10208	Drive Crank Packer (1 - 3/4" Tapped Holes)
16	1	1	1	10214	Driven Crank, Agitator (3 - 3/4" Tapped Holes)
17	30	6	6	02303	10 Gauge x 12" Coulter
17				02304	1/4" x 12" Coulter (Single Bevel-Optional)
18	1	1		10213	Cross Link
19	2	4	2	02101	Bearing-Agitator 1" Flange Mt.
20	2	4	4	02102	Bearing-Packer & Coulter 1 1/4" Flange Mt.
21	2	6	6	01905	5/16 x 2 1/2 Cotter Pin
22	4	8	4	01705	5/16" 18 UNC Carriage Bolt 1" Long
23	4	8	4	01438	5/16" 18 UNC Locknut
24	4	12	12	01706	3/8" 16 UNC Carriage Bolt 1 1/2" Long
25	4	44	44	01430	3/8" 16 UNC Locknut
26	2	4	2	01012	5/16" Drive Alemite Fitting
27	8	24	24	01522	3/8" 16 UNC Hex Head Bolt 1" Long
28	1	6	6	10079	Coulter Back-up Plate
29	2	6	6	01551	1/2" 13 UNC Hex Head Bolt 2 1/2" Long
30	2	9	9	01436	1/2" 13 UNC Locknut
31	13	3	2	01908	1/2" 13 UNC Set Screw 3/4" Long Sq. Hd. Cup Pt.
32		2	2	03003	Decal
33	4	12	12	01571	5/8" 11 UNC Hex Head Bolt 1 1/2" Long
34	4	11	11	01435	5/8" 11 UNC Locknut
35	10	4	2	01597	3/4" 10 UNC Hex Head Bolt x 2 1/2 "
36	6	5	3	01437	3/4" 10 UNC Locknut
37	1	2	2	01903	5/8" 11 UNC Set Screw - Sq. Hd. Cup Point
38	1	2	2	01406	5/8" 11 UNC Hex Nut (Set Screw Jam Nut)
39		2	2	03027	Zip Seeder Decal
40	2	1	1	03015	Fertilizer and Seed Rate Table (Decal)
41	2	1	1	10320	Control Linkage Bushing
42	2	1	1	01574	5/8" UNC Bolt x 2 1/4"
43	2	1	1	10330	Owners Kit
44	2	8	8	01301	3/8 - 16 UNC Carriage Bolt 1 1/4" Long
45	1	1		10218	Front Agitator Driven Crank
46		3	3	01553	1/2 UNC x 3 Capscrew
47				01041	3/4" I.D. x 1" O.D. x 3/4" Tension Bushing

(43) OWNERS KIT (10330) INCLUDES:
1/8" ALLEN WRENCH (104724)
3/16" ALLEN WRENCH (104727)
OWNERS MANUAL (10331)
PLASTIC BAG (03012)

(A) NOTE:
10001-L Z-6 Module, L.H. Drive
10001-R Z-6 Module, R.H. Drive
10002-L ZF-6 Module, L.H. Drive
10002-R ZF-6 Module, R.H. Drive

10282 FULL KIT REQUIRES ONE L.H. DRIVE & ONE R.H. DRIVE MODULE

10120

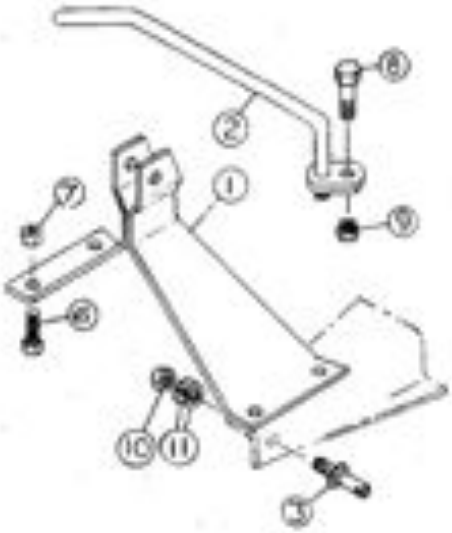
8
2
1
7
9
6
10
11
3

10282

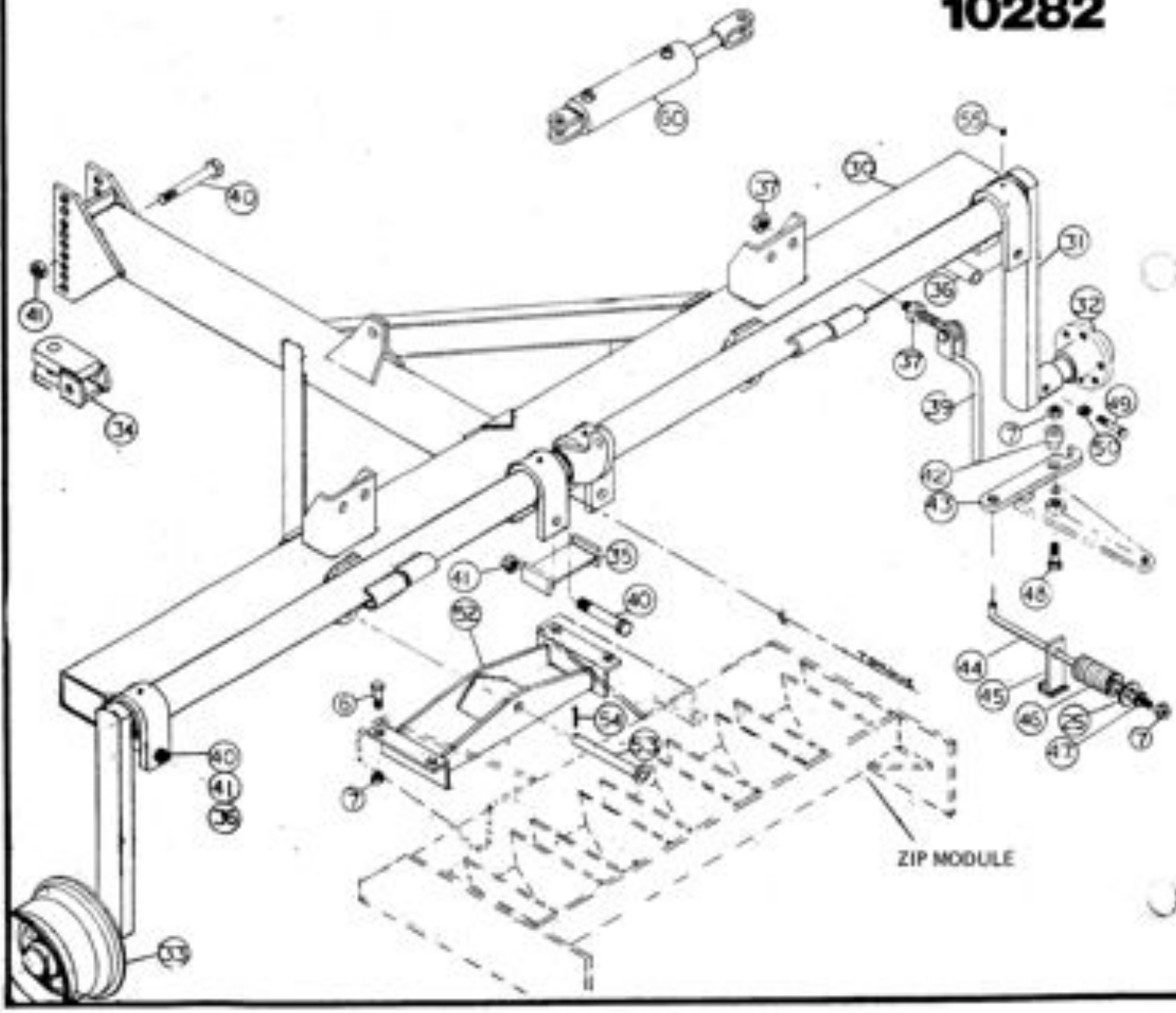
50
55
30
37
40
31
41
36
32
37
34
39
49
7
50
42
43
35
41
40
52
48
44
45
46
25
7
47
54
53
6
7
40
41
38
ZIP MODULE
33

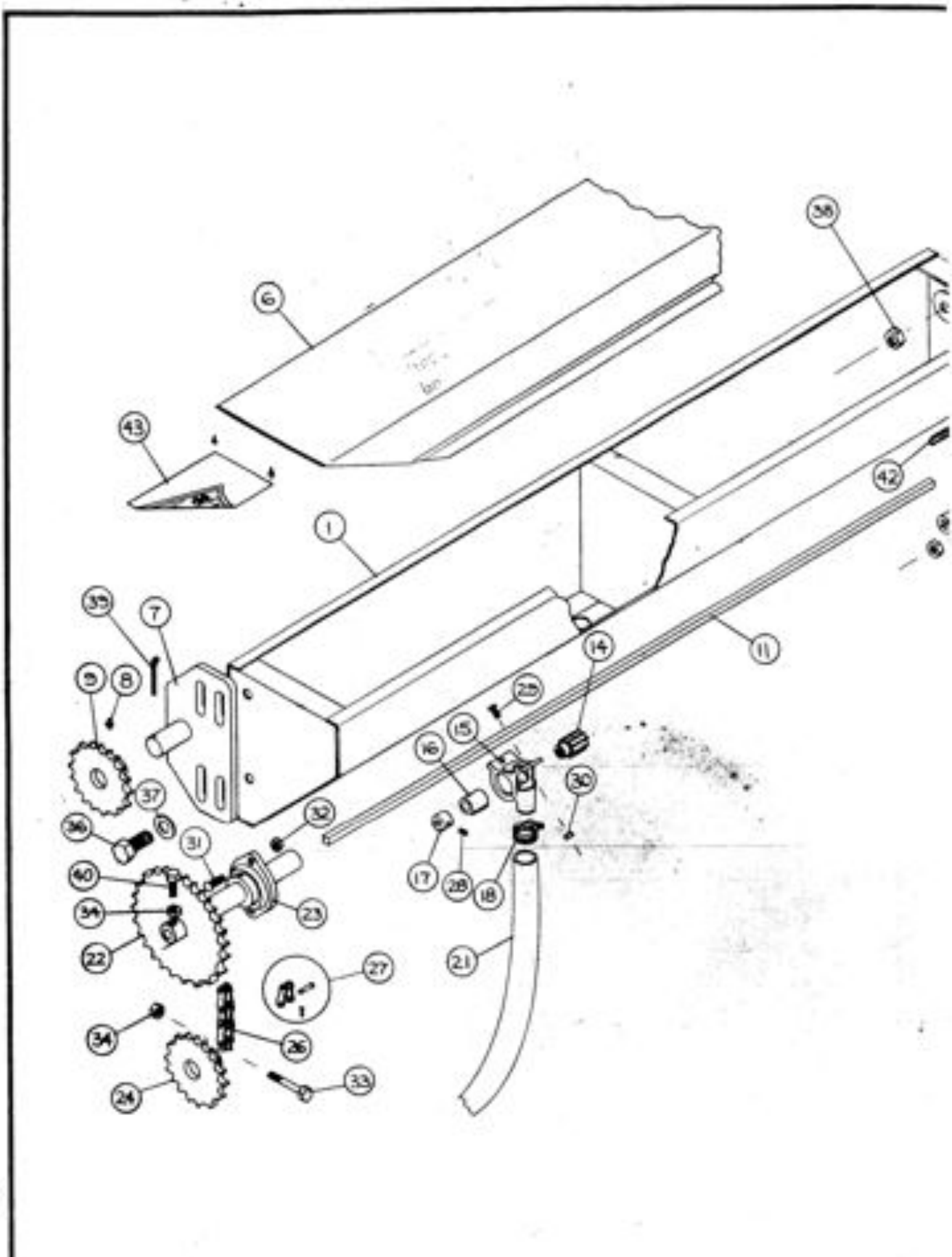
6
43
1
35
7
9
8
37
36
40
34
22
31
32
23
27
34
26
24
33
38
42
11
14
29
15
16
30
17
28
18
21

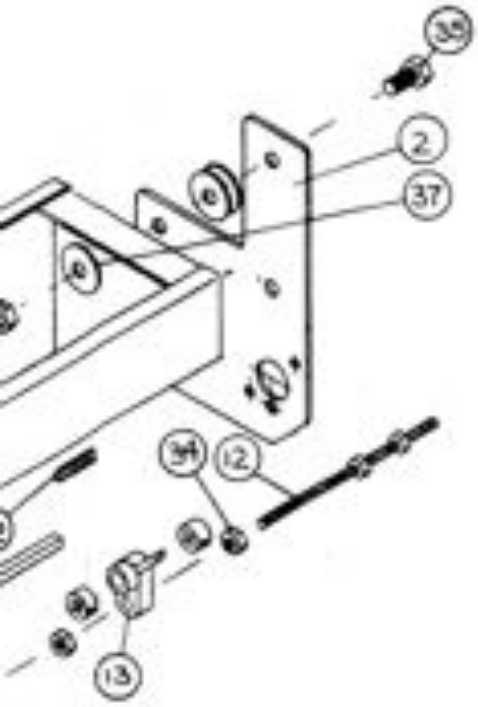

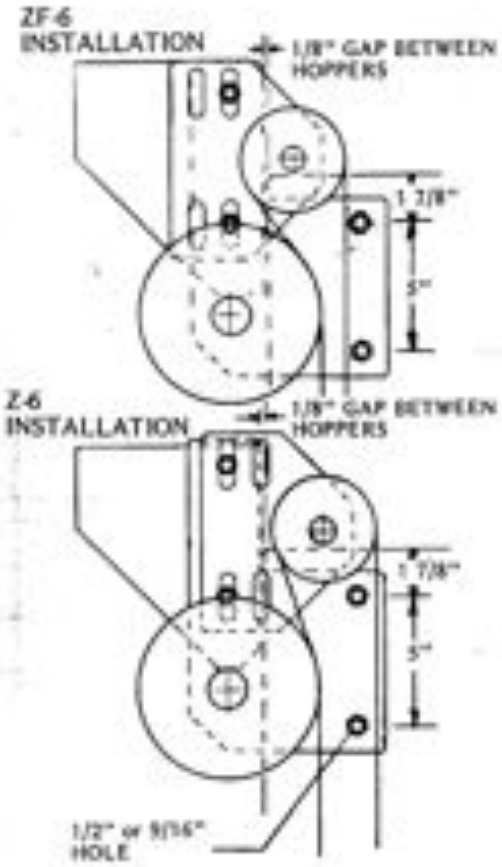

Zip Seeder
10506

REF	# REQ.	PART #	ITEM
1	1	10510	Hoppe Weldment
2	2	10556	Small Seeder Mounting Brkt.
6	1	10516	Hopper Lid
7	1	10534	Idler Bracket
8	1	01009	1/8" P.T. Grease Fitting
9	1	10520	Idler Sprocket Assembly
11	1	10562	Drive Shaft
12	1	10524	Adjustment Stud
13	1	101703	Indicator
14	6	100614	Feed Roll
15	6	100616	Feed Roll Housing
16	6	100615	Feed Gate
17	8	100482	Set Collar
18	6	100365	Hose Clamp
21	6	10557	Hose, (Z-6, ZF-6)
22	1	10561	Driven Sprocket
23	1	02101	1" Bore Flange Mt. Brg.
24	1	10528	Drive Sprocket
26	1	10545	Chain, Z-6 and ZF-6
27	1	104683	Offset Link (Service Part)
28	8	01907	1/4"x3/8" No. 20 Allen Hd. Set Screw
29	12	01804	1/4" UNC x 3/4" R.H. Machine Screw
30	12	01400	1/4" UNC Hex Nut
31	2	01705	5/16" UNC x 1" Carriage Bolt
32	2	01438	5/16" UNC Hex Locknut
33	1	01534	3/8" UNC x 2 1/2" Hex Bolt
34	6	01439	3/8" UNC Hex Locknut
35	6	01546	1/2" UNC x 1" Hex Bolt
36	2	01548	1/2" UNC x 1 3/4" Hex Bolt
37	10	01204	1/2" Flatwasher
38	8	01404	1/2" UNC Hex Nut
39	1	01017	3/16"x1 3/4" Cotter Pin
40	1	01522	3/8" UNC x 1" Capscrew (Drive shaft screw)
42	1	100763	Seed Rate Plate
43	1	01552	Seed Rate Decal

ITEM #	10120 QTY.	10282 QTY.	PART #	DESCRIPTION
1	1		10123	Hitch Weldment, Top Link
2	1		10144	Manual Arm, Shut Off
3	2		100298	7/8" Hitch Pin, Lower Link
6	4	8	01572	5/8" UNC x 1 3/4" Bolt
7	4	12	01435	5/8" UNC Locknut
8	1		01661	1" UNC x 3" Bolt
9	2		01453	1" UNC Locknut
10	2		01424	7/8"-14 UNF Hex Nut
11	4		01308	7/8" Lockwasher (Double Required)
30		1	10169	Pull Kit Tongue Weldment
31		1	10185	Rockshaft Weldment
32		2	02087	Spindle & Hub Assembly (Q-813)
33		2	02042	15 x 6 Wheel (6 Hole)
34		1	10165	Hitch Clevis Weldment
35		1	10196	Spacer Weldment, Rockshaft Cuff
36		2	10199	Spacer Tube, Rockshaft Cuff
37		4	01457	1" - 8 UNC Hex Jam Nut
39		2	10178	Cam Follower Weldment (Closer)
40		5	01605	3/4" - 10 UNC x 6" Bolt
41		5	01437	3/4" - 10 UNC Locknut
42		2	10320	1" Shoulder Bushing x 11/16 I.D.
43		2	10164	Shutter Arm Opener Crank
44		2	10309	Rod, Spring Opener
45		2	10306	Bracket, Opener Rod
46		2	15218	Spring, Compression (Opener)
47		2	01206	5/8" Flat Washer
48		2	01574	5/8" - 11 UNC x 2 1/4" Bolt
49		2	01553	1/2" - 13 UNC x 3" Bolt
50		2	01436	1/2" - 13 UNC Locknut
52		2	10190	Pivot Bkt, Weldment (Zip Only)
53		2	10194	Pivot Pin Weldment 1" x 7"
54		2	01005	5/16" x 2 1/2" Cotter Pin
55		4	01012	5/16" Drive In Alemite Fitting

ACCESSORIES AVAILABLE FOR ABOVE HITCH KITS

60	1	011135	3" x 8" Cyl. (Sub. for A.S.A.E. 8" Remote Cyl.)
60	1	011390	3" x 8" Heavy Duty Cylinder

ITEM #	10120 QTY.	10282 QTY.	PART #	DESCRIPTION
1	1		10123	Hitch Weldment, Top Link
2	1		10144	Manual Arm, Shut Off
3	2		100258	7/8" Hitch Pin, Lower Link
6	4	8	01572	5/8" UNC x 1 3/4" Bolt
7	4	12	01435	5/8" UNC Locknut
8	1		01661	1" UNC x 3" Bolt
9	2		01453	1" UNC Locknut
10	2		01424	7/8"-14 UNF Hex Nut
11	4		01308	7/8" Lockwasher (Double Required)
30		1	10169	Pull Kit Tongue Weldment
31		1	10185	Rockshaft Weldment
32		2	02087	Spindle & Hub Assembly (Q-81 I)
33		2	02042	15 x 6 Wheel (6 Hole)
34		1	10165	Hitch Clevis Weldment
35		1	10196	Spacer Weldment, Rockshaft Cuff
36		2	10199	Spacer Tube, Rockshaft Cuff
37		4	01457	1" - 8 UNC Hex Jam Nut
39		2	10178	Cam Follower Weldment (Closer)
40		5	01605	3/4" - 10 UNC x 6" Bolt
41		5	01437	3/4" - 10 UNC Locknut
42		2	10320	1" Shoulder Bushing x 11/16 I.D.
43		2	10164	Shutter Arm Opener Crank
44		2	10309	Rod, Spring Opener
45		2	10306	Bracket, Opener Rod
46		2	15218	Spring, Compression (Opener)
47		2	01206	5/8" Flat Washer
48		2	01574	5/8" - 11 UNC x 2 1/4" Bolt
49		2	01553	1/2" - 13 UNC x 3" Bolt
50		2	01436	1/2" - 13 UNC Locknut
52		2	10190	Pivot Bkt. Weldment (Zip Only)
53		2	10194	Pivot Pin Weldment 1" x 7"
54		2	01005	5/16" x 2 1/2" Cotter Pin
55		4	01012	3/16" Drive In Alemite Fitting

ACCESSORIES AVAILABLE FOR ABOVE HITCH KITS

60	1	011135	3" x 8" Cyl. (Sub. for A.S.A.E. 8" Remote Cyl.)
60	1	011390	3" x 8" Heavy Duty Cylinder