NEW HOLLAND

TN55D
TN65D
TN70D
TN75D

TN55S
TN65S
TN70S
TN75S

OPERATOR'S MANUAL

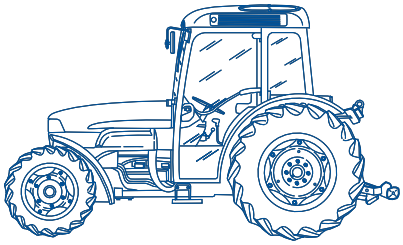

603.64.611.00 05/03

NEW HOLLAND

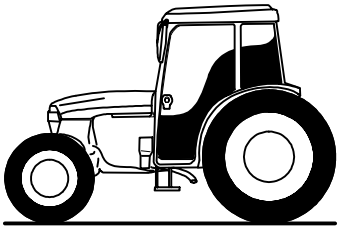

NEW HOLLAND

TN55D TN55S
TN65D TN65S
TN70D TN70S
TN75D TN75S

OPERATION
MAINTENANCE
SPECIFICATIONS

NEW HOLLAND

CONTENTS

COLOURS	
COLOUR	INITIAL
BLACK	M−1724−P
DARK GREY	RAL−7024
GREY	RAL−7015
WHITE	TA/21
NEW HOLLAND BLUE	86593620

CONTENTS

Section − Page

TO THE USER

GENERAL

This Use and Maintenance Manual provides a guide for the user with regard to running−in, use and maintenance of the tractor.

Read this manual carefully and keep in a convenient place for future reference. Do not hesitate to contact your local dealer for any queries concerning the tractor. The dealer can provide skilled personnel, trained by the Manufacturer, original spare parts and all tools and equipment necessary for your service requirements.

The tractor is designed as a power generator and drive−propulsion unit for use in normal and traditional agricultural conditions.

The tractor is also designed to provide maximum performance, economic running and easy use over a wide range of operations. Prior to delivery, all machines are carefully inspected (by both the Manufacturer and your local authorised dealer), to make sure that they reach the user in perfect condition. To maintain the tractor in this condition and ensure trouble−free operation, the routine maintenance described in Section 3 of this manual must be carried out at the specified intervals.

CLEANING THE TRACTOR

Your tractor is an advanced machine, fitted with an electro−hydraulic control system. Care should be taken when cleaning the tractor, especially if a pressurised water cleaner is used.

■ Never stand too close to the tractor or direct the water jet on electrical components, seals or intake openings, etc.

■ Never direct jets of cold water at the hot engine or exhaust. See also Section 3 (Recommendations for bodywork maintenance).

SAFETY

Safety precautions for the operator and bystanders are shown on pages vii to xiii inclusive. Read the safety instructions and follow recommendations and hints **before** starting to use the tractor.

SERVICE AFTER THE FIRST 50 HOURS OF WORK

The operations required for the first service are shown at the end of the Manual, immediately prior to the index.

After the first 50 hours of use, return to the dealer with your tractor and this Manual in order to carry out the Manufacturer's checks and to fill in the certificates included on pages 1 and 3). The first sheet (page 1) must be compiled on completion of the service and held by the dealer. The second sheet (page 3) must be kept in the Manual for documentation and reference purposes. **Check that both copies are signed by both yourself and the dealer.**

SPARE PARTS

"Non−original" spare parts have not been tested or authorised by the Manufacturer. Instalment and/or use of such products may adversely affect the tractor's design specifications, thereby compromising operational safety. The manufacturer cannot be held responsible for any damage resulting from the use of "non−original" spare parts.
No modifications may be made to the tractor without written authorisation from the Manufacturer.

WARRANTY

The tractor is guaranteed in accordance with current legislation in your country and in line with contractual agreements reached with the dealer at the time of sale. However, the warranty is no longer valid if the rules and instructions for the use and maintenance of the tractor, described in this Manual, are not observed.

TRACTOR IDENTIFICATION

Serial numbers and/or production codes identify the tractor and its main components. The identification data must be supplied by the dealer for requests for spare parts or service operations. Identification data is of fundamental importance in the event of theft of the tractor. The location of the various identification data is shown below.

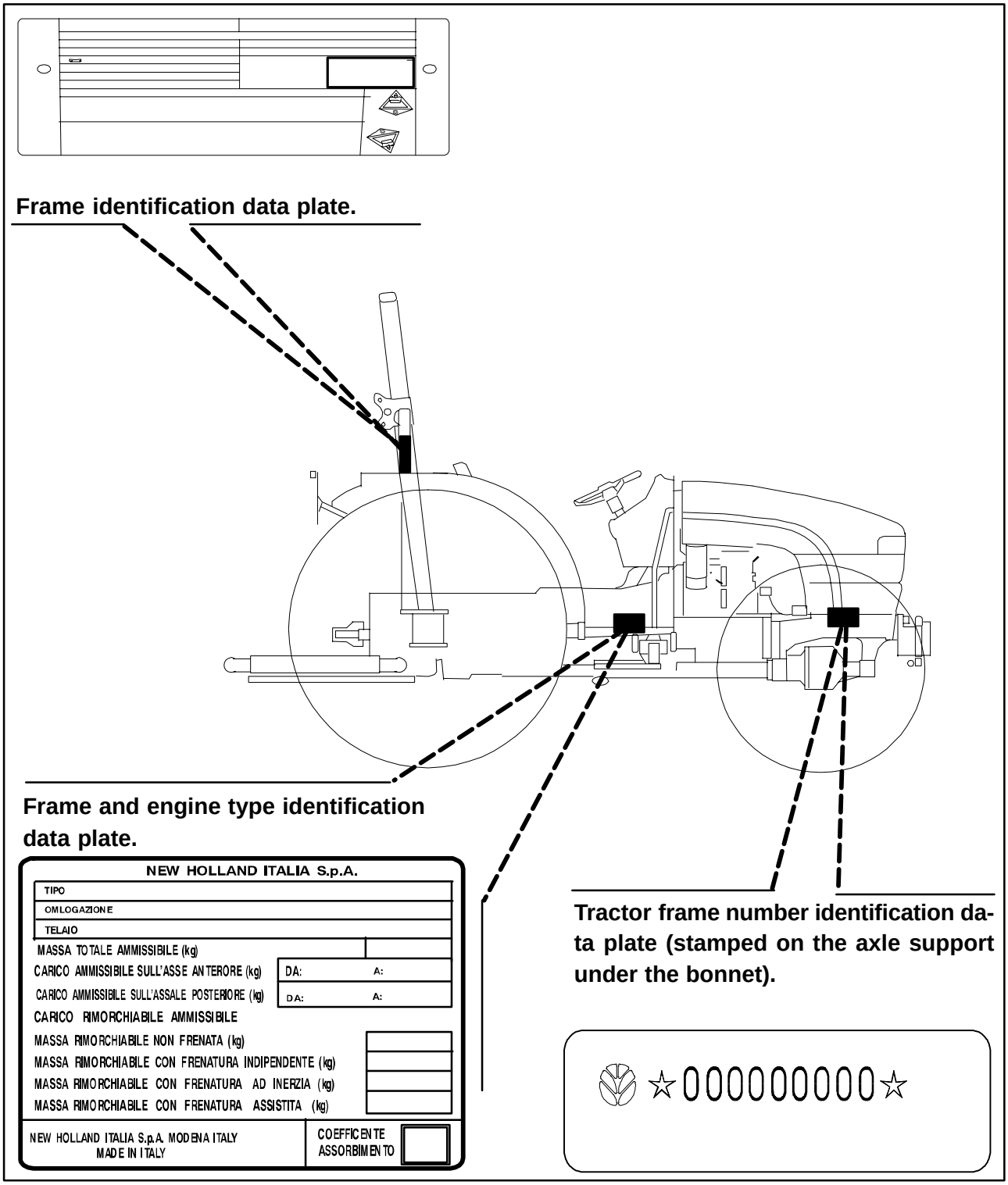

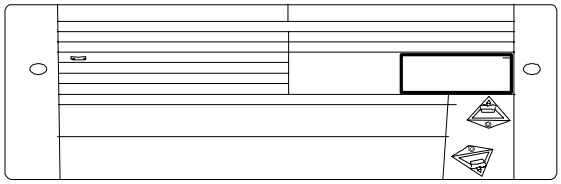

Cab identification data plate (rear RH side).

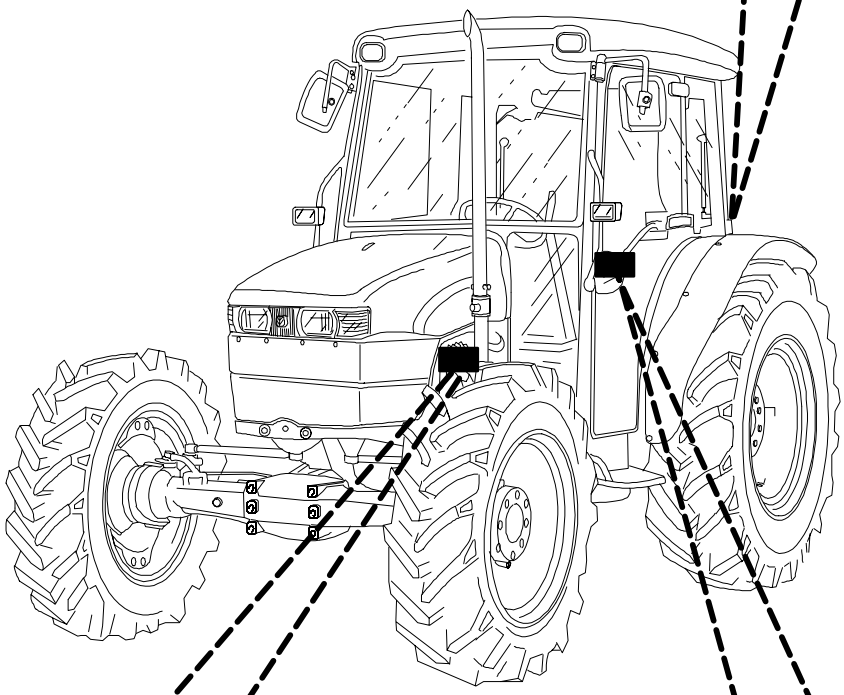

Frame and engine type identification data plate (inside the cab).

Engine identification data plate (on engine body).

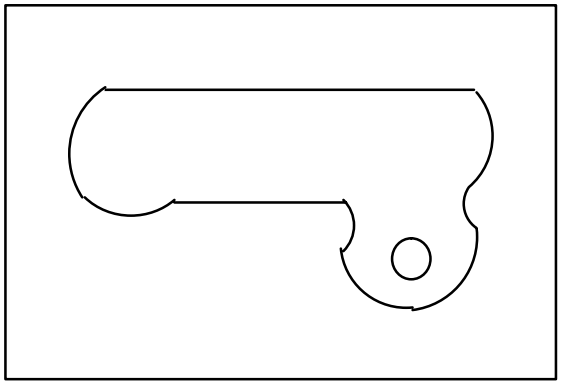

NEW HOLLAND ITALIA S.p.A.

TIPO		
OMLOGAZIONE		
TELAIO		
MASSA TOTALE AMMISSIBILE (kg)		
CARICO AMMISSIBILE SULL'ASSE ANTERORE (kg)	DA:	A:
CARICO AMMISSIBILE SULL'ASSALE POSTERIORE (kg)	DA:	A:
CARICO RIMORCHIABILE AMMISSIBILE		
MASSA RIMORCHIABILE NON FRENATA (kg)		
MASSA RIMORCHIABILE CON FRENATURA INDIPENDENTE (kg)		
MASSA RIMORCHIABILE CON FRENATURA AD INERZIA (kg)		
MASSA RIMORCHIABILE CON FRENATURA ASSISTITA (kg)		

NEW HOLLAND ITALIA S.p.A. MODENA ITALY
MADE IN ITALY

COEFFICENTE ASSORBIMENTO

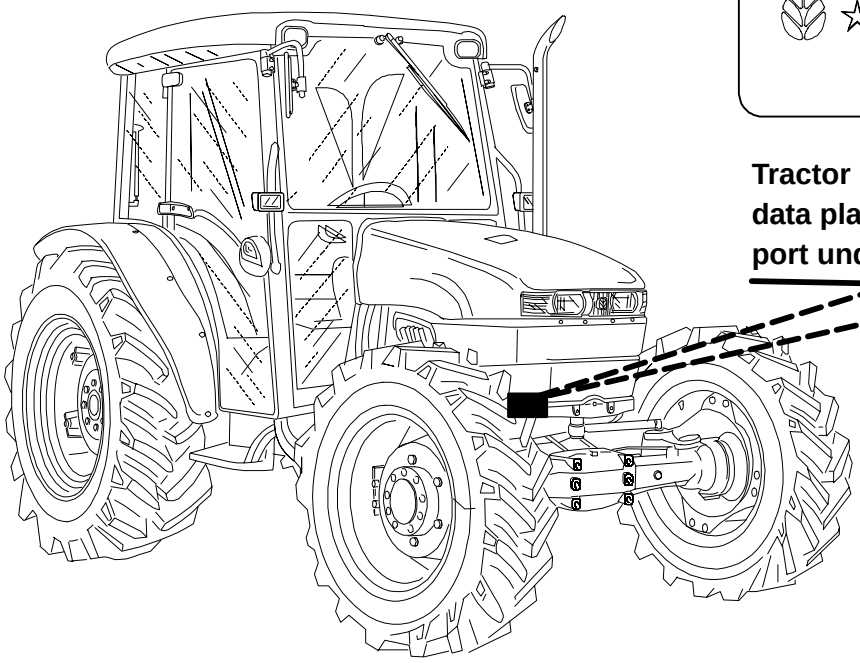
☆000000000☆
Tractor frame number identification data plate (stamped on the axle support under the bonnet) − Fig. 4
27593

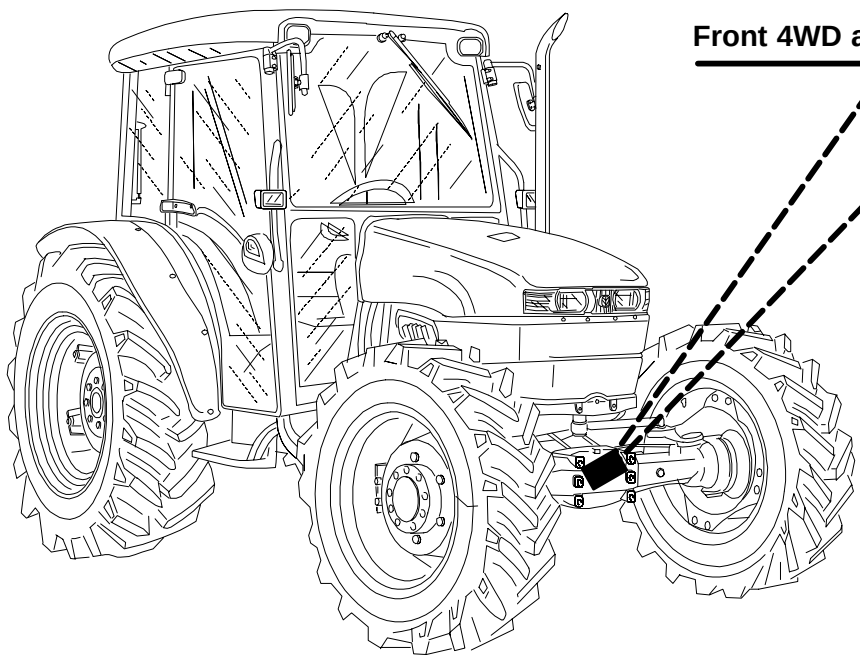
☆000000000☆
Front 4WD axle identification data plate.
27593

IMPORTANT ECOLOGICAL CONSIDERATIONS

Soil, air and water are essential elements for agriculture and for life on in general. If local legislation does not control the treatment of certain substances, the production of which is necessitated by advanced technologies, products derived from chemical and petrochemical products must be used and disposed of according to the rules of common sense.

The following recommendations may be of help:

■ Find out what the relevant legislation in your country stipulates.

■ Ask your suppliers of lubricants, oils, fuels, anti–freeze, detergents, etc., for information on the effects of these products on humans and the environment and for instructions concerning their use, storage and disposal. In many cases, local agricultural consultants will be able to provide assistance.

SUGGESTIONS

1. Avoid using unsuitable, pressurised filling systems or fuel cans when filling tanks, as these may cause considerable spillage and leakage of liquids.

2. As a general rule, do not allow liquid fuels, lubricants, acids, solvents, etc., to come into contact with the skin. The majority of these products contain substances that are potential health hazards.

3. Modern lubricants contain additives. Do not burn contaminated fuel oils and/or oils used in conventional heating systems.

4. Avoid spillage when transferring used engine cooling liquids, engine and transmission lubricants, hydraulic oils, brake fluids, etc.. Never mix used brake oil with fuel oil, or fuel oil with lubricants. Store safely until suitable disposal can be arranged according to national legislation or local regulations.

5. Modern anti−freeze liquids and solutions, e.g.: anti−freeze and other additives, must be replaced every two years. They must not be left to be absorbed into the ground, but must be collected and disposed of in a suitable manner.

6. Do not open the air conditioning systems to carry out work. These systems contain gas which must not be released into the atmosphere. Contact your dealer or specialised personnel, who are equipped with the appropriate equipment and are authorised to re−fill the system.

7. Any leakage or defect in the engine cooling or hydraulic systems must be repaired immediately.

8. Do not increase the pressure in pressurised systems, as this may cause component parts to burst.

9. When welding, make sure that hoses are properly protected as sparks or molten material may puncture or weaken the tubes and sleeves, resulting in leakage of oil, cooling liquid, etc..

10. Do not adjust the setting of the fuel delivery system as this will alter the emission of exhaust fumes.

NOTE: *The engines installed on the tractors comply with anti−pollution legislation.*

ALWAYS WORK SAFELY

This symbol is used to alert the reader to important information which directly concerns personal safety.

Read the following safety instructions carefully and follow the recommendations in order to avoid potential hazards and safeguard your health and safety.

In the text of this manual you will find the symbol alongside the following key words:

CAUTION − When the warning is to prevent potential damage to the machine, which could also put the operator's safety at risk.

DANGER − This warning specifically indicates a potential danger to the user or to any other person directly involved.

Failure to observe the instructions preceded by the aforementioned key words (**CAUTION** and **DANGER**) may result in severe or fatal injury to the persons involved.

Furthermore, this manual also contains instructions in italics preceded by the terms **NOTE** and **WARNING**, with the following relevance in relation to machine protection:

NOTE − Underlines the correct procedure or technique to be followed by the operator.

WARNING − Informs the operator of the danger of damaging the machine if the specified procedure is not followed.

IMPORTANT WARNINGS

The machine is designed and produced exclusively for agricultural use.

All other use will be considered to be contrary to the use specified by NEW HOLLAND, who cannot be held liable for damage to property or the machine, or for personal injuries which may result.

Persons who risk improper use will therefore assume the responsibility for any consequences arising from such use.

Compliance with the instructions for use, maintenance and repairs described in this manual, are the essential preconditions for the use specified by NEW HOLLAND.

The machine must only be used, serviced or repaired by personnel trained in the relevant working methods and safety regulations and who have been authorised to work on the machine.

The user must also observe the rules concerning general safety and accident prevention, including the Highway Code when driving on public highways.

Any arbitrary modifications made to this machine will release NEW HOLLAND from any liability resulting from damage or injury.

NEW HOLLAND and all distribution organisations, inclusive of, but not restricted to, national, regional or local distributors, cannot be held liable for damage resulting from the malfunction of parts and/or components not approved by NEW HOLLAND.

Under no circumstances will a guarantee be issued for products made or sold by NEW HOLLAND that are damaged as a result of the malfunction of parts and/or components not approved by NEW HOLLAND.

WORKING SAFELY

GENERAL

■ During the manufacturing of this tractor, every step has been taken to ensure safe operation. However, the best way to avoid accidents is to exercise caution at all times. Once the accident has already happened it is too late to remember what steps should have been taken.

■ Read this manual carefully before starting, using, carrying out maintenance, refuelling or performing any other type of operation on the tractor.

■ The time spent reading this manual will allow you to get to know your tractor, thereby saving time and effort.This will also help prevent accidents from taking place.

■ Read all the safety decals on the machine and follow the instructions thereon before starting, operating, refuelling or carrying out maintenance on the machine. Promptly replace any decals that are damaged, lost or illegible.
Clean the decals if they are covered by mud or debris.

■ Remember that the tractor is exclusively designed for agricultural use. Any other use will require prior authorisation from NEW HOLLAND.

■ It is advisable to keep a first aid kit on hand.

■ The tractor must only be used by responsible personnel, trained in tractor use and authorised to operate the machine.

■ Do not alter the injection system calibration in an attempt to increase maximum engine speed.

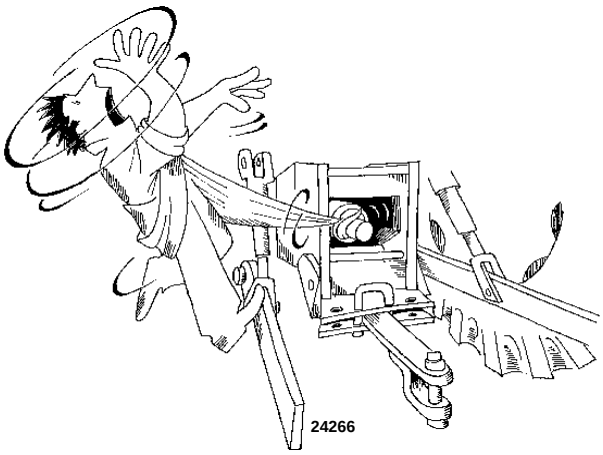

■ Do not wear loose clothing that may be trapped in moving parts.
Check that all rotating parts connected to the power take−off are correctly protected.

■ Do not alter the calibration of the pressure relief valves in the various hydraulic circuits (hydrostatic steering, hydraulic lift, auxiliary distributors, etc.).

■ Avoid using the tractor in unsuitable physical conditions, stop work instead.

■ Enter and leave the tractor using the steps and handles provided. Keep these fittings free of mud and debris.

■ Always operate with the cab or roll bar correctly and securely fitted on the tractor: periodically check that the fittings are not loose and that all parts of the structure are free from any damage and deformation. Do not modify the roll bar by welding parts, drilling holes, etc., as this could adversely affect the rigidity of the structure.

STARTING THE TRACTOR

■ Before starting the engine, check that the handbrake is on and that the gears and power take−off are disengaged, even if the tractor is fitted with a start−up safety device. Never disconnect the start−up safety switch. If the switch does not work correctly, contact your local dealer for eventual repair operations.

■ Before starting the engine, make sure that all attached implements are lowered to the ground.

■ Before starting the engine, check that all covers and guards are correctly in position (roll bar, bonnet side panels, power take−off guard, front axle transmission shaft cover, etc.).

■ **Never attempt to start or manoeuvre the tractor unless seated in the driving position.**

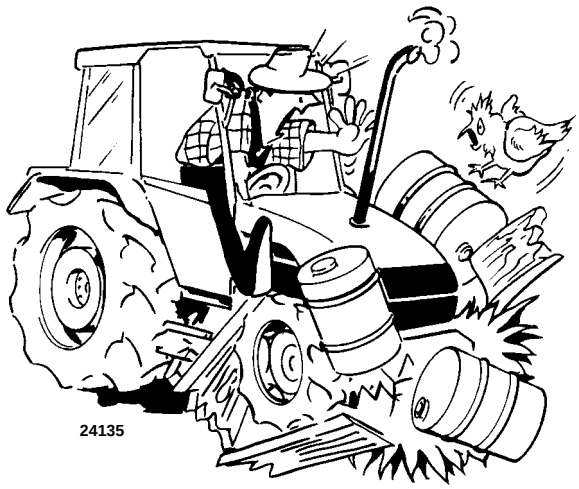

■ Before moving the tractor, always check that the area is free of persons or obstacles.

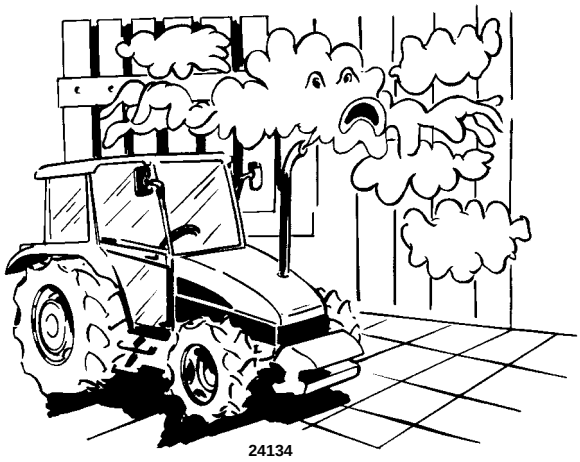

■ Never run the engine in a closed space without ensuring adequate ventilation. Exhaust fumes are damaging to the health and can be lethal.

USING THE TRACTOR

■ Select the most suitable wheel setting for the work in hand, i.e.: the setting that provides the best stability.


24136

■ Engage the clutch slowly: if engaged too quickly, especially when the tractor is getting out of a hole, ditch or operating on muddy ground or steep slopes, the tractor may overturn.
Release the clutch immediately if the front wheels start to lift.

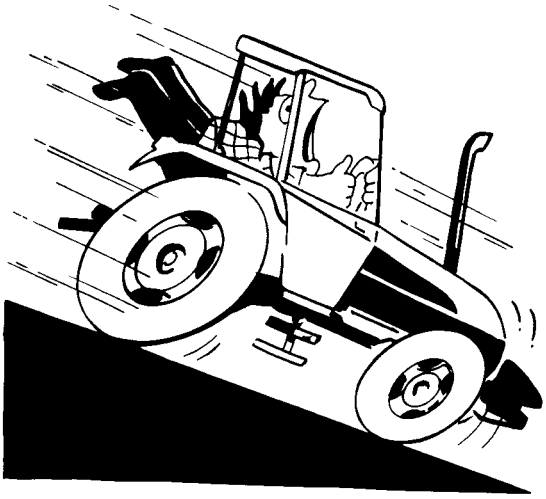
24223

■ When travelling downhill, keep the tractor in gear. Never release the clutch and never leave the gears in neutral.

■ When the tractor is moving, the operator must remain correctly seated in the driving position.

■ Never get on or off the tractor while in movement.

■ When using the brakes, press the pedal down slowly.

■ Avoid curving at high speeds.

■ Always use the tractor at a speed that will guarantee safe operation on the type of land being worked. When working on uneven ground, use maximum care to ensure proper stability.

■ If you have to work with the tractor on a gradient, for example on hillsides, drive at moderate speed especially when taking curves.


24137

■ Proceed with maximum caution when working with the wheels near the edge of ditches or slopes.

■ When driving on public highways, observe the Highway Code.

■ When driving, do not rest your feet on the brake or clutch pedals.

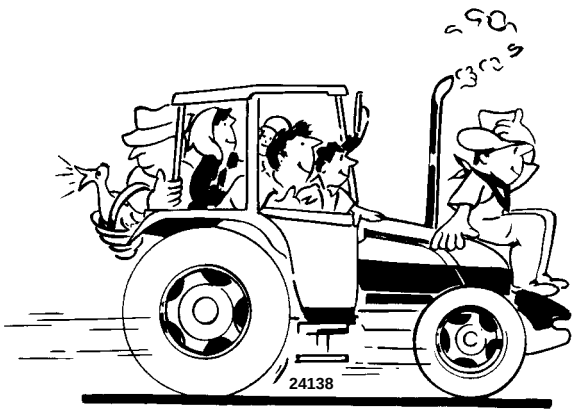

■ Never carry passengers, not even inside the cab, unless the machine is fitted with an approved extra seat.

■ When driving on roads, connect the brake pedals using the plate provided. Braking with single pedals can cause the tractor to skid. Avoid excessive wear on the brakes by using engine braking.

TOWING AND TRANSPORT

■ To guarantee tractor stability when moving, adjust the hitching device according to the trailer or implement to be used (see Caution on page 2−113).

■ Drive slowly when towing extremely heavy loads.

■ For your own safety, do not tow trailers that are not fitted with an independent braking system.

■ If the tractor is used to tow heavy loads, always use the hitching device and never hitch loads onto the lower arms or the top link of the three−point linkage. This may result in tipping overturning.

■ When towing, do not negotiate curves with the differential lock engaged as this may prevent you from steering the tractor.

USING IMPLEMENTS AND AGRICULTURAL MACHINERY

■ Do not connect implements or machinery that require more power than can be generated by your tractor model.

■ Never negotiate sharp curves with the power take−off under a heavy load; this may damage the universal joints on the transmission shaft connected to the power take−off.

■ Never stand between the reversing tractor and the implement when hitching.

■ When using implements that require the tractor to be stationary with the engine running, keep the gear and range levers in the neutral position, apply the handbrake and use suitable wheel chocks.

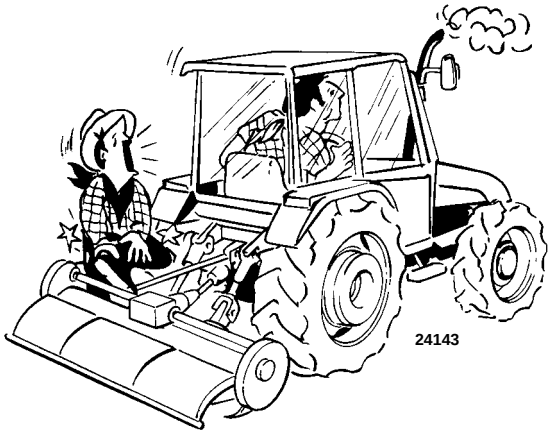

■ Do not operate machines connected to the power take−off without first ensuring that the operating range of the machine is free of bystanders.
Also check that all rotating parts connected to the power take−off shaft are correctly protected.

■ Add rear ballast when using lifting equipment fitted to the front of the tractor.

STOPPING THE TRACTOR

■ When the tractor is stationary, never leave connected implements in the raised position. All implements must be lowered before stopping the engine.

■ Before leaving the driving position, move the gear lever to the neutral position, disengage the power take−off, apply the handbrake, stop the engine and put the tractor in gear.
Always remove the ignition key from the dashboard when leaving the tractor unattended.

■ Park on flat surfaces, where possible, put the tractor into gear and apply the handbrake. On slopes, in addition to applying the handbrake, put the tractor in first gear when facing uphill and first reverse gear when facing downhill. As an additional safety measure, use wheel chocks (available as an optional);
this procedure is compulsory when parking with a trailer hitched or with the electro−hydraulic shuttle.

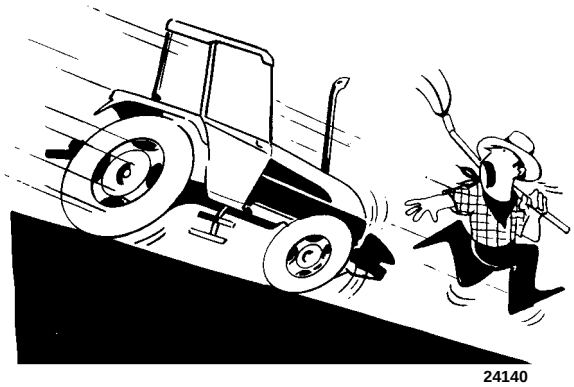

TRACTOR MAINTENANCE

CAUTION: *In this manual, some illustrations show panels or covers removed in order to facilitate explanations.*
Never use the tractor without the panels or guards in place.

■ Do not work on the tyres with unsuitable equipment or without the necessary experience. Incorrect tyre fitting may put safety at risk.
If in doubt, contact skilled personnel.

■ When changing or storing tyres, make sure they are stacked correctly and cannot roll or topple over causing personal injury.

■ Before removing any hydraulic tubing, check that the system is not pressurised.

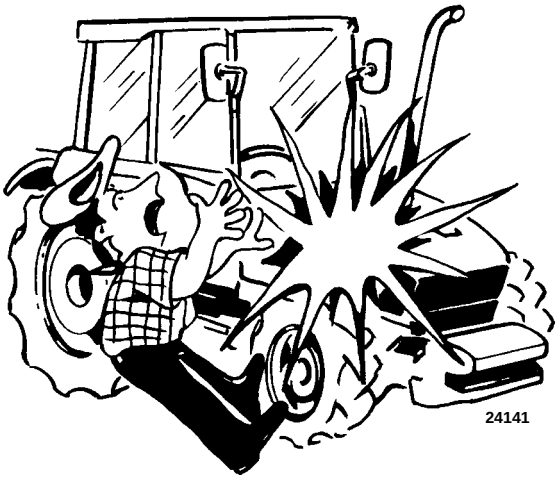

■ Leaks of pressurised oil can cause serious injuries. When looking for leaks use the appropriate safety equipment: screens, safety glasses and gloves.

■ Before touching any electrical components, disconnect the ground lead from the battery.

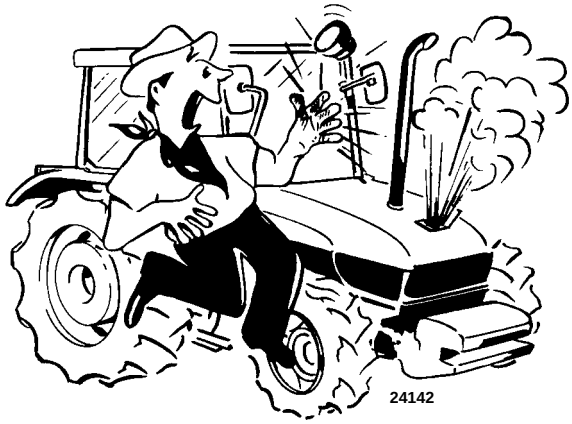

■ Only remove the radiator cap after the engine has been allowed to cool. With the engine switched off, use a cloth to slowly unscrew the cap and release the pressure before completely removing the cap.

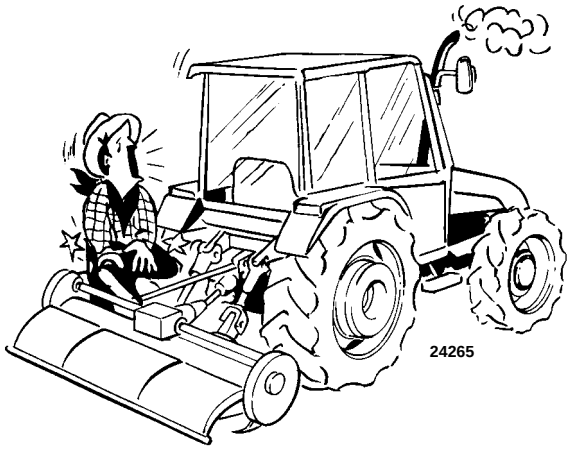

■ Before inspecting, cleaning or carrying out maintenance on the tractor (or any implement connected to the tractor), always ensure that the engine is switched off, the gears are in neutral, the brakes are on, the power take−off is disengaged and that all moving parts are stationary.

■ Do not fill up the fuel tank completely if the tractor is to work in extremely sunny conditions, as the fuel may expand and escape. If this occurs, dry up the spillage immediately.

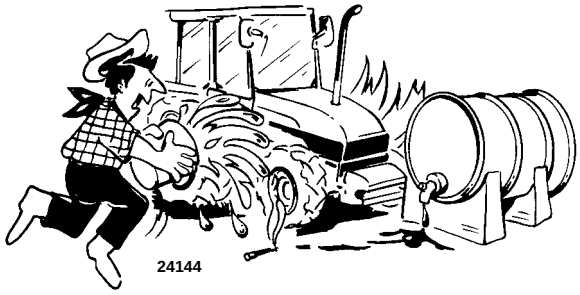

■ Always keep a fire extinguisher at hand.

SAFETY DECALS

The safety decals on the following pages are positioned on your tractor in the locations shown in the drawings below.

These safety decals are important both for your safety and that of personnel working with you.

We recommend that you study these pages and find the positions of the safety decals on the tractor, checking that their meanings are clear.

Read the instructions below with the tractor drivers that will operate the machine.

Keep the safety decals clean and legible. If damaged, order replacements from your dealer.

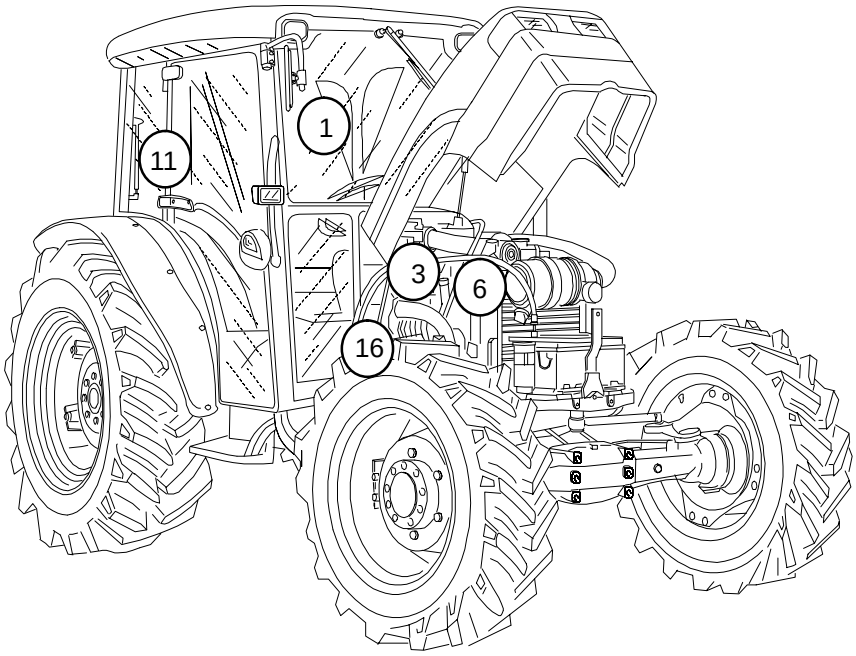

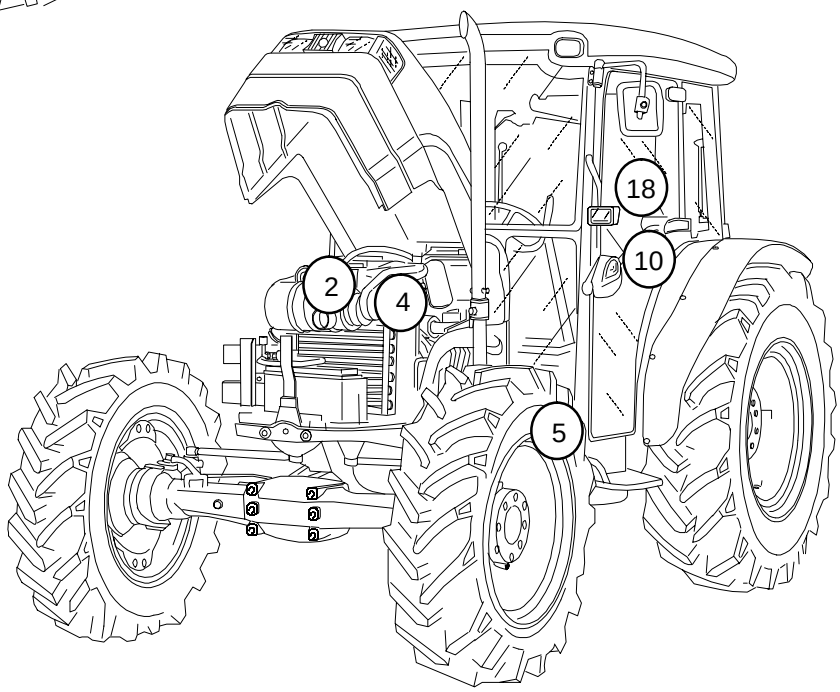

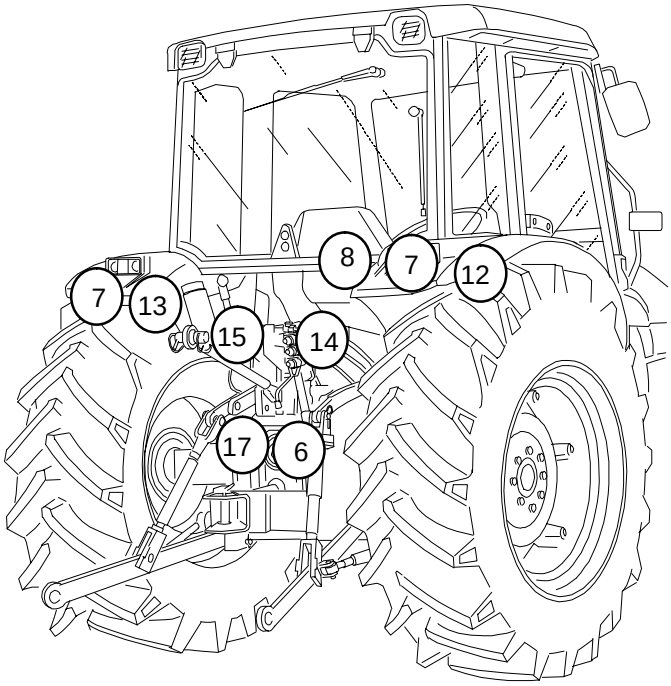
8
7
12
7
13
15
14
17
6

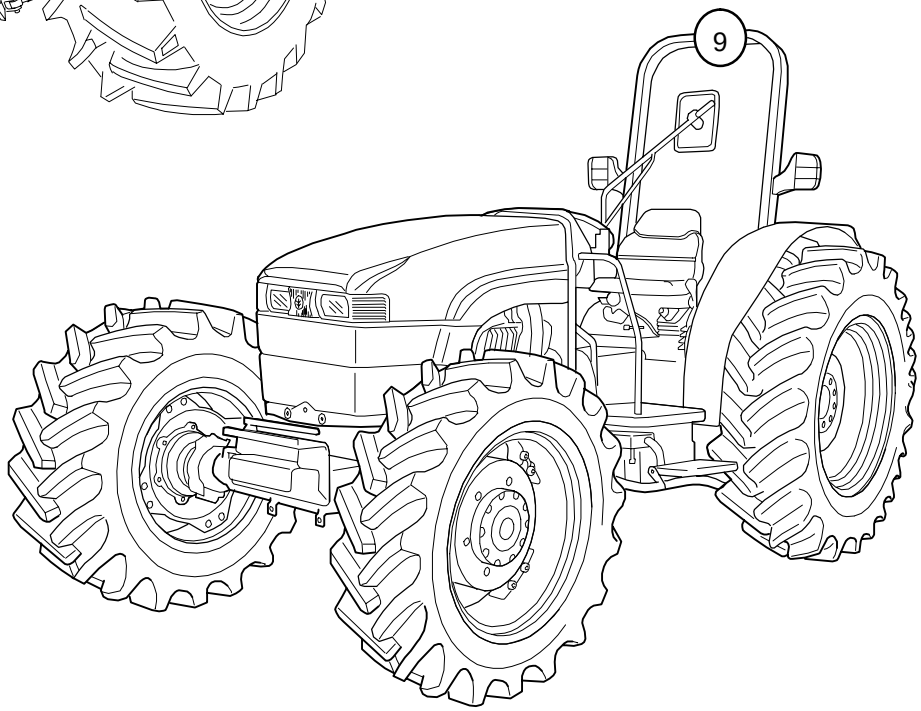
9

1. Location: left−hand upright:
− inside the cab;
− roll bar.
If the tractor should overturn, hold the steering wheel tightly. Do not attempt to jump out of the cab.

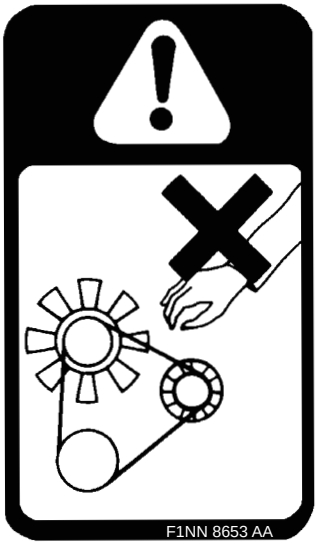

2. Location: left and right−hand sides of the radiator.
To avoid serious injury, keep hands and clothing away from the rotating fan, belts and any other rotating parts.

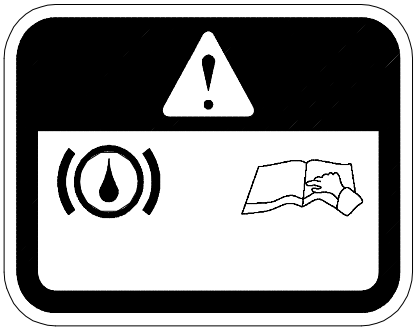

3. Location: right−hand side of brake system fluid container.
To keep the braking system in good working order, refer to the Use and Maintenance Manual. If the red warning light on the instrument panel illuminates, there is a fault in the braking system.

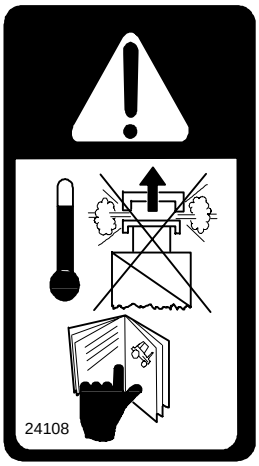

4. Location: left−hand side of the radiator, and right−hand side of distribution cover.
WARNING: Pressurised cooling system. Allow to cool then remove cap carefully. Use a cloth to slowly unscrew the cap and release the pressure before completely removing the cap.

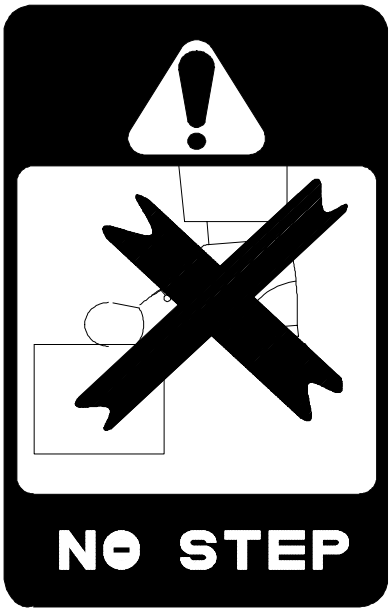

5. Location: left−hand side of the toolbox or on the exhaust pipe guard.
WARNING: Do not stand on the toolbox or use it as a step. The toolbox is not designed to sustain weight.

6. Location: at the rear: on the power take−off guard; at the front: on the air conditioning compressor.
GENERAL WARNING: observe and respect the indications on the **safety decals** and in the **Use and Maintenance Manual** when this symbol is present.

7. Location: rear of mudguards.
To avoid serious injury, do not climb on the implement or between the implement and the tractor when the external hydraulic controls are enabled.

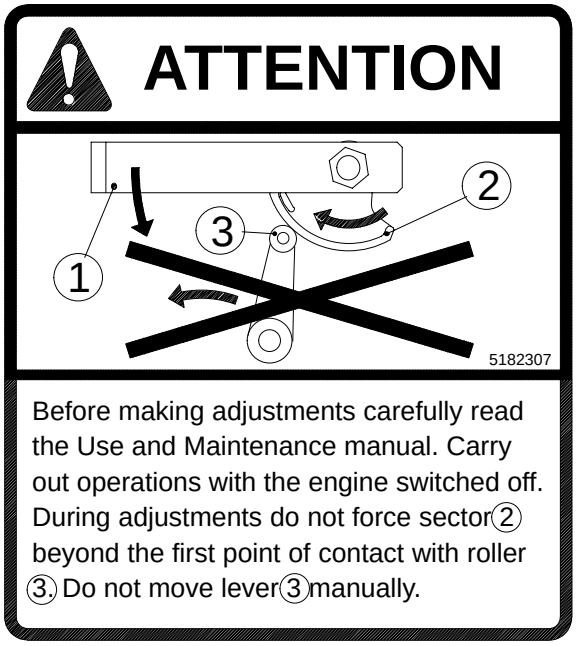

8. Location: at the rear: on the right handmudguard.
Before making adjustments, carefully read the correct procedure noted in the Use and Maintenance Manual.

9. Location: upper part of roll bar. DANGER

CLOSELY FOLLOW THE REGULATIONS FOR TRACTOR USE NOTED BELOW

−If used incorrectly, the tractor may tip over or overturn.
−**The roll bar may only** be lowered for short distances. The tractor is **without protection** when the roll bar is in the lowered position.
−Raise the roll bar and insert the lock pins immediately after use for short distances or for transport purposes.
−With the roll bar lowered the use of safety belts is not advised.
−Do not hitch cables or chains to the roll bar for towing purposes.
−Do not use the vehicle without the roll bar lock pins in position if a roof has been installed.
−The use of the roll bar and safety belts reduces the risk of serious injury or death in the event of the tractor tipping over or overturning.

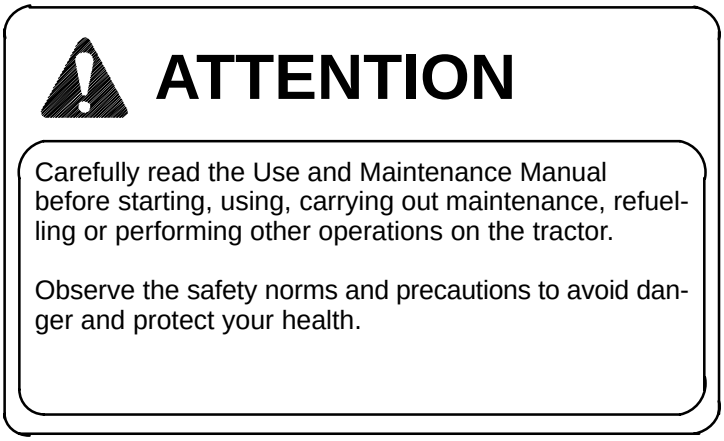

10. Location: Operator.
− with cab: on left−hand side window.
− with roll bar: on left−hand mudguard.

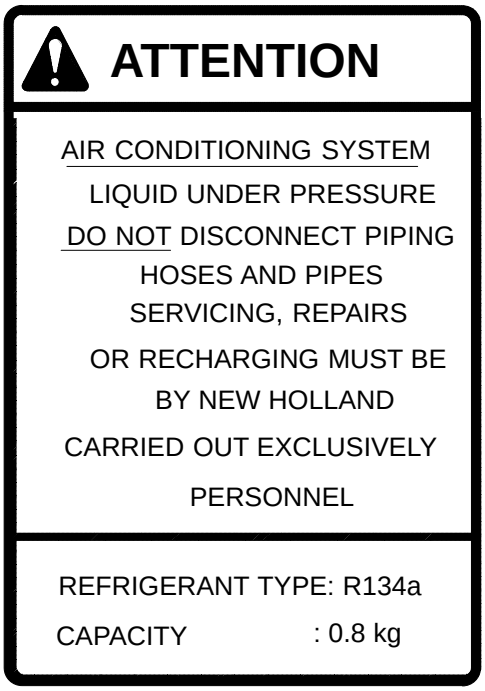

11. Location: left−hand side window.

STANDARDISED SYMBOLS

For optimal tractor use, the following symbols and definitions have been adopted in compliance with current standardisation procedures. The symbols are followed by a brief explanatory description.

Auxiliary ignition

Alternator charging

Fuel level

Automatic fuel cut−off device

Engine speed (rpm x 100)

Total hours worked

Engine oil pressure

Engine coolant temperature

Lights

Front headlights on full beam

Front headlights dipped

Lights (STOP)

Front work lights

Rear work lights

Engine coolant level

Horn

Radio

KAM Memory

Indicator lights

1 Indicator lights on first trailer

2 Indicator lights on second trailer

Windscreen washer/wiper

Rear windscreen washer/wiper

Heated air temperature

Heater fan

Air conditioning temperature

Dry air filter

Parking brake

Rotating beacon on cab roof

Intercooler temperature

Power take−off

N Gears in neutral

Creeper speed

Slow or low speed adjustment

Fast or high speed adjustment

Tractor ground speed

Differential lock

Rear transmission oil temperature

Transmission oil pressure

4WD engaged

4WD disengaged

Caution!

Hazard warning lights

Caution! Corrosive substances

Adjustment control

Hydraulic lift − operating in position control

Hydraulic lift − operating in draft control

Accessory power socket

Implement power socket

Hydraulic lift disconnected

% slipping of rear wheels

Caution, under pressure! Open carefully

Arms raised

Arms lowered

Maximum lifting height

Transmission oil filter

Hydraulic rod extended

Hydraulic rod retracted

Hydraulic rod floating

Fault! Refer to Use and Maintenance manual

TRACTOR NOISE LEVEL INFORMATION SHEET

In conformity with EU regulations, the noise levels of the tractors included in this Operation and Maintenance Handbook are stated hereunder.

NOTA: In alcuni paesi Extra CEE il Kit di riduzione rumore potrebbe non essere disponibile.

2WD MODELS 18.64 mph (30 km/h)

TRACTORS WITH ROLL BARS

Model	Maximum noise level at steering wheel dB (A)			
	Exhaust pipe			
	Vertical		Horizontal	
	Without noise reduction kit	With noise reduction kit	Without noise reduction kit	With noise reduction kit
TN55D	91.0	86.0	91.0	86.0
TN65D	90.0	84.0	90.0	84.0
TN70D	91.0	85.0	91.0	84.0
TN75D	91.0	85.0	91.0	84.0

TRACTORS WITH CABS

Model	Maximum noise level at steering wheel with cab doors and windows:			
	closed dB (A)		open dB (A)	
	Exhaust pipe		Exhaust pipe	
	Vertical	Horizontal	Vertical	Horizontal
TN55D	80.0	79.5	83.0	84.0
TN65D	80.0	79.5	84.5	84.5
TN70D	80.0	80.0	85.0	85.0
TN75D	80.0	80.0	85.0	85.0

4WD MODELS 18.64 mph (30 km/h)

TRACTORS WITH ROLL BARS

Model	Maximum noise level at steering wheel dB (A)			
	Exhaust pipe			
	Vertical		Horizontal	
	Without noise reduction kit	With noise reduction kit	Without noise reduction kit	With noise reduction kit
TN55D	91.0	86.0	91.0	86.0
TN65D	90.0	84.0	90.0	84.0
TN70D	91.0	85.0	91.0	84.0
TN75D	91.0	85.0	91.0	84.0

TRACTORS WITH CABS

Model	Maximum noise level at steering wheel with cab doors and windows:			
	closed dB (A)		open dB (A)	
	Exhaust pipe		Exhaust pipe	
	Vertical	Horizontal	Vertical	Horizontal
TN55D	80.0	79.5	83.0	84.0
TN65D	80.0	79.5	84.5	84.5
TN70D	80.0	80.0	85.0	85.0
TN75D	80.0	80.0	85.0	85.0

4WD MODELS 24.85 mph (40 km/h)

TRACTORS WITH ROLL BARS

Model	Maximum noise level at steering wheel dB (A)			
	Exhaust pipe			
	Vertical		Horizontal	
Model	Without noise reduction kit	With noise reduction kit	Without noise reduction kit	With noise reduction kit
TN55D	91.0	86.0	91.0	86.0
TN65D	90.0	84.0	91.5	84.0
TN70D	91.0	85.0	91.0	84.0
TN75D	91.0	85.0	91.0	84.0

TRACTORS WITH CABS

Model	Maximum noise level at steering wheel with cab doors and windows:			
	closed dB (A)		open dB (A)	
	Exhaust pipe		Exhaust pipe	
	Vertical	Horizontal	Vertical	Horizontal
TN55D	78.0	78.0	82.0	82.5
TN65D	79.5	80.0	83.0	84.0
TN70D	78.0	78.0	83.0	83.0
TN75D	78.0	78.0	83.0	83.0

4WD TRACTORS WITH SUPERSTEER FRONT AXLE 18.64 mph (30 km/h)

TRACTORS WITH ROLL BARS

Model	Maximum noise level at steering wheel dB (A)			
	Exhaust pipe			
	Vertical		Horizontal	
	Without noise reduction kit	With noise reduction kit	Without noise reduction kit	With noise reduction kit
TN55D	91.0	86.0	91.0	86.0
TN65D	90.0	84.0	90.0	84.0
TN70D	91.0	85.0	91.0	84.0
TN75D	91.0	85.0	91.0	84.0

TRACTORS WITH CABS

Model	Maximum noise level at steering wheel with cab doors and windows:			
	closed dB (A)		open dB (A)	
	Exhaust pipe		Exhaust pipe	
	Vertical	Horizontal	Vertical	Horizontal
TN55S	80.0	79.5	83.0	84.0
TN65S	80.0	79.5	84.5	84.5
TN70S	80.0	80.0	85.0	85.0
TN75S	80.0	80.0	85.0	85.0

4WD TRACTORS WITH SUPERSTEER FRONT AXLE 24.85 mph (40 km/h)

TRACTORS WITH ROLL BARS

Model	Maximum noise level at steering wheel dB (A)			
	Exhaust pipe			
	Vertical		Horizontal	
	Without noise reduction kit	With noise reduction kit	Without noise reduction kit	With noise reduction kit
TN55D	91.0	86.0	91.0	86.0
TN65D	90.0	84.0	91.5	84.0
TN70D	91.0	85.0	91.0	84.0
TN75D	91.0	85.0	91.0	84.0

TRACTORS WITH CABS

Model	Maximum noise level at steering wheel with cab doors and windows:			
	closed dB (A)		open dB (A)	
	Exhaust pipe		Exhaust pipe	
	Vertical	Horizontal	Vertical	Horizontal
TN55S	78.0	78.0	82.0	82.5
TN65S	79.5	80.0	83.0	84.0
TN70S	78.0	78.0	83.0	83.0
TN75S	78.0	78.0	83.0	83.0

NOTES

SECTION 1

GENERAL NOTES, CONTROLS AND INSTRUMENTS

INTRODUCTION

This operator's manual has been produced to provide the user with practical information, documents and instructions about the correct procedure for running in, driving, operating and maintaining the new tractor.

The manual is subdivided into five sections as shown on the "Contents" page. The alphabetical index is at the end of the manual.

Read and refer to this manual carefully, and always keep it in a convenient place so that you can refer to it whenever necessary.

If you should at any time need information and advice about using your tractor, please contact your dealer.

The dealer has the skilled personnel, genuine service parts and necessary equipment to carry out your service requirements.

All the data provided in this manual is subject to product modifications. Weights and measures are to be considered approximate figures and the illustrations do not necessarily show tractors with standard fittings.

For precise information on specific tractor models and versions, please contact your authorised dealer.

The Manufacturer is engaged in a continuous process of product development and improvement and therefore reserves the right to change the specifications, components and prices of the product itself at any time, without prior notice.

In this manual, the "left" and "right" of the tractor are as seen from the driver's seat facing forward.

The necessary precautions to guarantee the personal safety of the operator and others are listed and described under the heading «Working safely» at the beginning of the manual. Read and follow this information **BEFORE** using the tractor.

SAFETY COVERS AND GUARDS

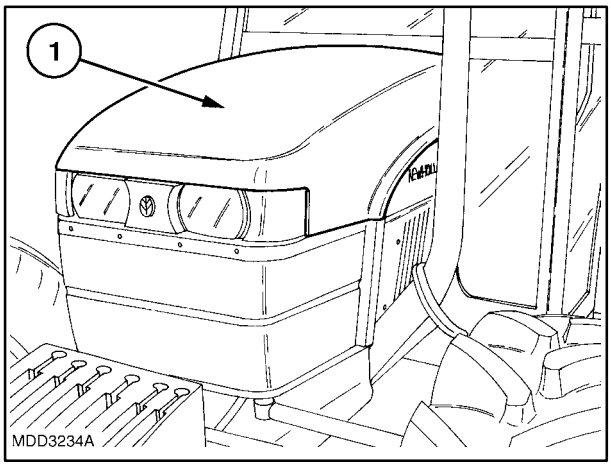

1

The tractor is fitted with covers and guards for the personal safety of the operator and others when working.

CAUTION: *Before starting the engine or using the tractor, always check that all safety covers and guards are fitted correctly.*

BONNET − Fig. 1

The bonnet (**1**) covers the moving parts of the engine.
It must be closed before the engine is started.

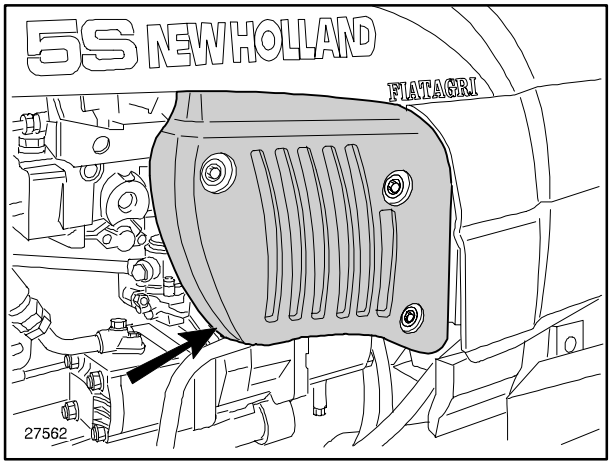

2

FAN COVER − Fig. 2

Both sides of the fan have covers (**1**). The cover shown in the drawing protects the left−hand side of the fan.

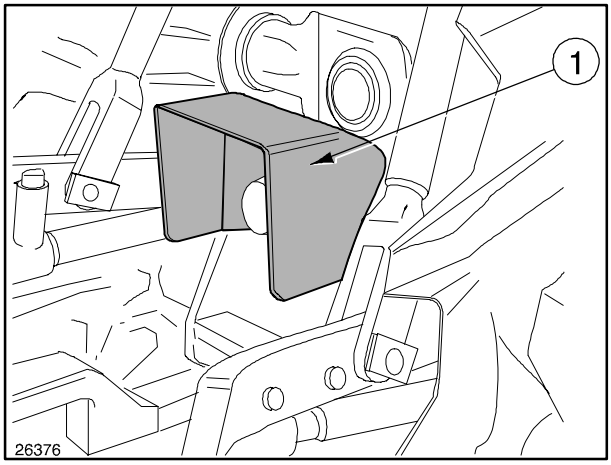

3

TRACTOR POWER TAKE−OFF GUARD − Fig. 3

The guard (**1**) protects the power take−off shaft.

CAUTION: *The guard must never be removed when the tractor is in use and must never be modified.*

POWER TAKE−OFF SHAFT GUARD − Fig. 4

The cover (**1**) must always be fitted on the power take−off shaft when it is not connected to the implement or machine in use. Replace the cover correctly when not in use.

CAUTION: *Check that all guards and covers are fitted correctly before using the tractor.*

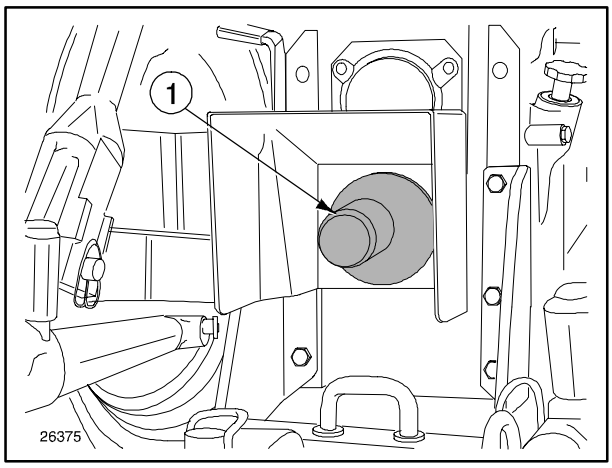

4

PIVOTING POWER TAKE−OFF GUARD − Fig. 5

The guard (**1**) protects the power take−off shaft.

NOTE: *To facilitate connection of the tractor transmission shaft/implement, lift the guard (**1**).*
Once connected, return the guard to the safety position.

CAUTION: *The guard must never be removed when the tractor is in use and must never be modified.*

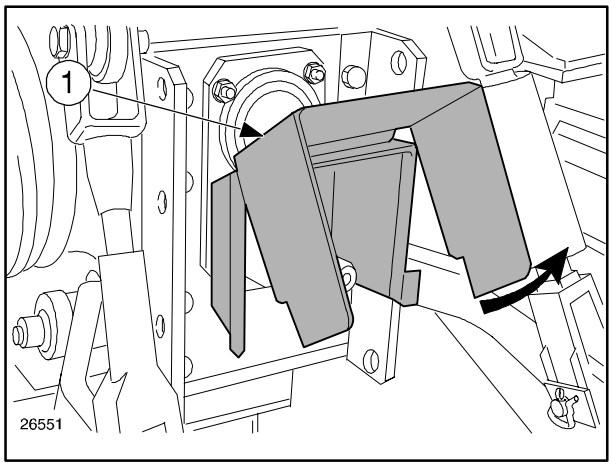

5

CONTROLS AND INSTRUMENTS

POSITION AND FUNCTION

The position and function of the controls and instruments on your tractor are described in the following pages.

The controls are conveniently positioned in the following seven locations in the cab:

1. Dashboard controls (control panel).
2. Right−hand side controls.
3. Electronic lift controls.
4. Left−hand side controls.
5. Pedal and foot plate controls.
6. Central console controls.
7. Cab controls.

NOTE: *The information in this section of the manual provides general instructions so that the operator will be able to locate and identify the function of individual controls, a detailed description, however, is not included in this section. For this information, read Section 2 of the manual carefully, relating to "Instructions for use" of controls and instrument readings, before starting and using the tractor.*

CAUTION: *Do not use the tractor if you are not fully acquainted with the position and operation of all tractor controls.*

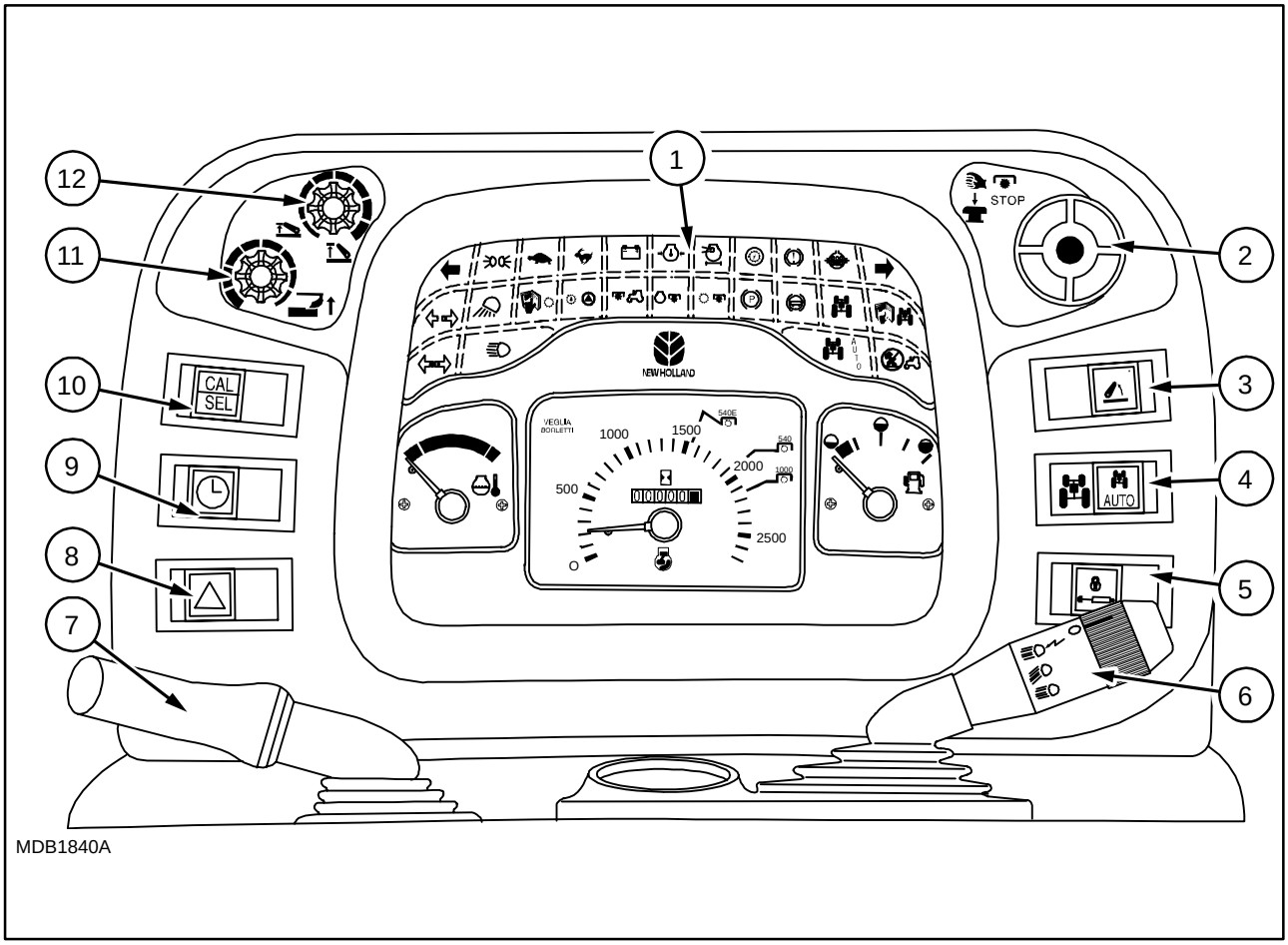

6

Analogue control panel

1. Function indicators.
2. Front PTO control.
3. Front lift arms raise control button.
4. Front traction mode selection control button.
5. Rear horizontal arms anti−swing tie rods adjustment control button.
6. Lights switch with incorporated horn.
7. Power Shuttle control lever.
8. Flashing hazard warning lights.
9. Clock adjustment switch.
10. Electronic dashboard mode selection switch (if fitted).
11. Front lift working depth control knob.
12. Front lift raising arms upper travel limit control knob.

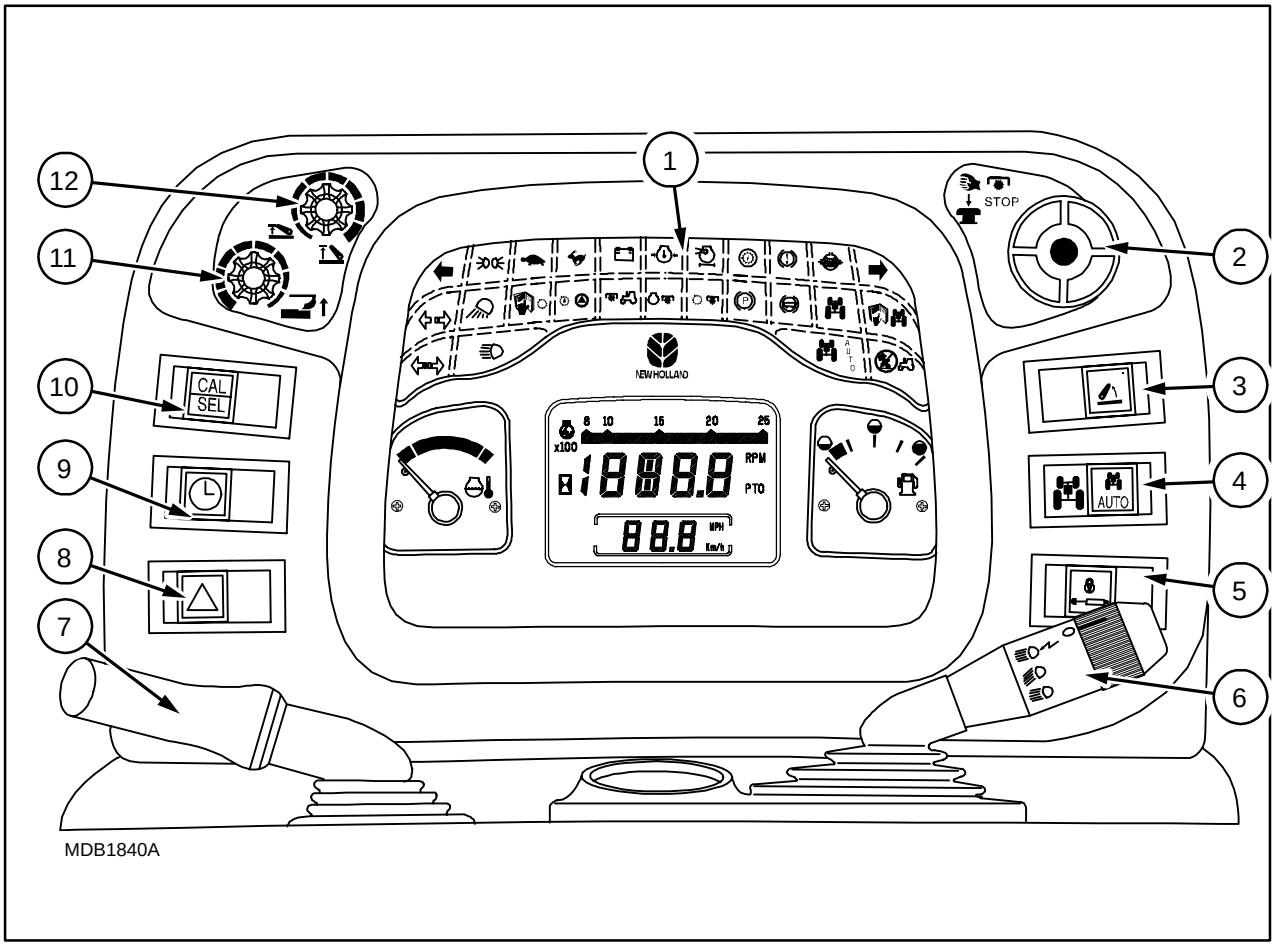

7

Digital instrument control panel

1. Function indicators.
2. Front PTO control.
3. Front lift arms raise control button.
4. Front traction mode selection control button.
5. Rear horizontal arms anti−swing tie rods adjustment control button.
6. Lights switch with incorporated horn.
7. Power Shuttle control lever.
8. Flashing hazard warning lights.
9. Clock adjustment switch.
10. Electronic dashboard mode selection switch (if fitted).
11. Front lift working depth control knob.
12. Front lift raising arms upper travel limit control knob.

CAUTION: *To avoid damaging the electronic components, follow the instructions noted below when carrying out arc welding on tractors fitted with electronic lifts or on connected implements.*

- When possible, disconnect the implement or the part that needs welding from the tractor.
- Disconnect the two battery cables from the terminals.
- Connect the welding machine ground clamp as close as possible to the area where welding is to take place.
- If welding is to be carried out within **3,28 feet (1 meter)** of the control unit, the unit must first be removed.
- Whilst welding, make sure that the cables do not pass above or near electrical or electronic leads.

HAZARD WARNING LIGHT SWITCH − Fig. 8

Press the switch (**1**) on the red part to turn on the flashing lights; when pressed, the switch also flashes.
The panel light flashes at the same time as the direction indicators.

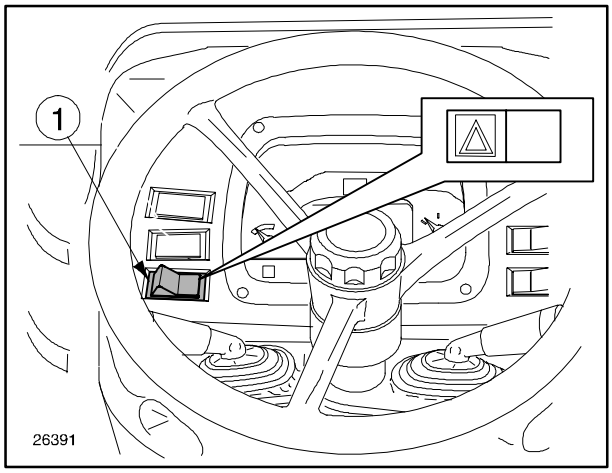

8

STEERING WHEEL HEIGHT ADJUSTMENT KNOB − Fig. 9

Unscrew the knob (**1**) to release the steering wheel lock. Adjust the steering wheel up or down in order to obtain a comfortable and safe driving position.

STEERING WHEEL POSITION ADJUSTMENT LEVER − Fig. 10

Pull the lever (**2**) upwards to release the steering wheel and adjust the position.

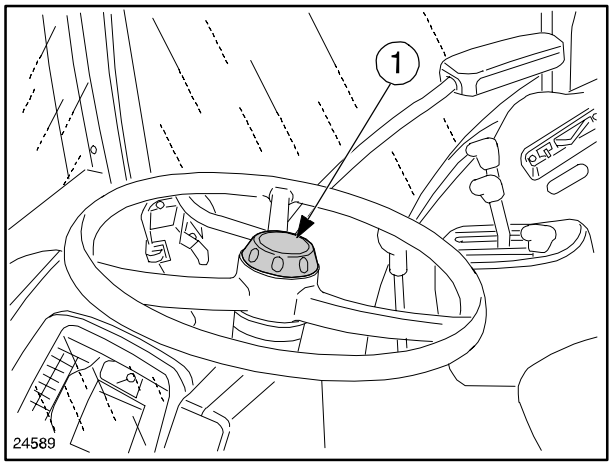

9

ELECTRO−HYDRAULIC SHUTTLE CONTROL LEVER (POWER−SHUTTLE/HI−LO VERSION ONLY) − Fig. 10

The lever (**1**) has three positions:

- forward (forward drive);
- back (reverse drive);
- central (neutral).

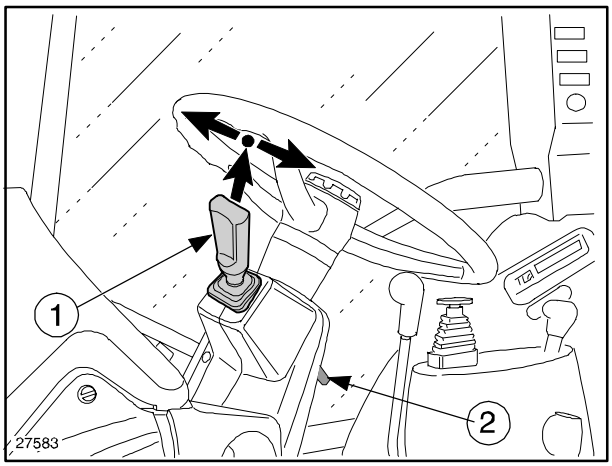

10

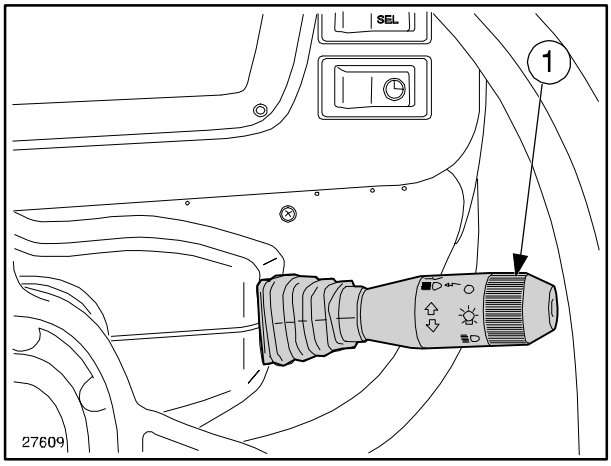

11

LIGHT CONTROL LEVER − Fig. 11

The lever (**1**) operates the external lights, the horn and the direction indicators.

The external lights will only work with the key switch in position **B** fig. 1, page 2−4.

NOTE: *For further details, see page 2−17.*

DIGITAL INSTRUMENT ADJUSTMENT PUSHBUTTON − Fig. 12

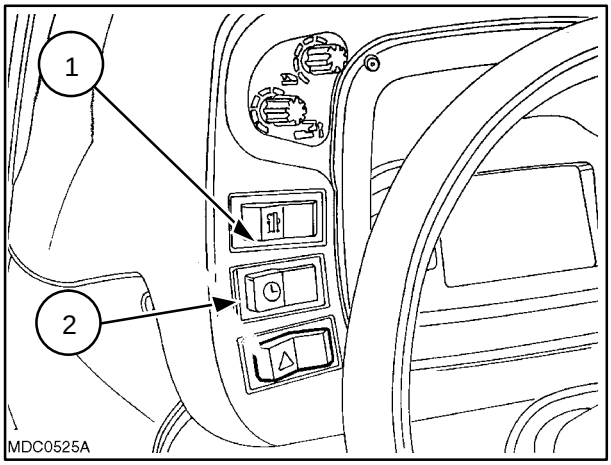

12

(1) Mode selection pushbutton.

(2) Clock adjustment button.

NOTE: *For further details, see page 2−14.*

FRONT LIFT MODE SELECTION POTENTIOMETER − Fig. 13

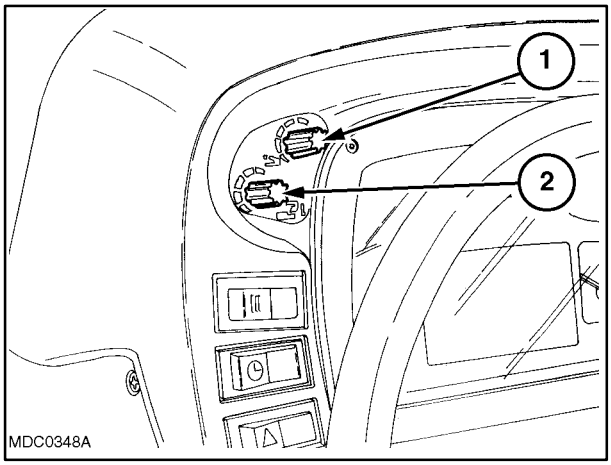

13

Lift arms upper travel limit control potentiometer.

1. Working depth control potentiometer.

2. Press the push button (**1**) to adjust the clock.

NOTE: *For further details, see page 2−15.*

FOUR−WHEEL DRIVE MODE SWITCH (1) − Fig. 14

Three different four−wheel drive functions can be selected with this switch:

- automatic cut−in (only models TN55S, TN65S, TN70S and TN75S);
- permanent disengagement;
- permanent four−wheel drive.

NOTE: *For further details, see page 2−75.*

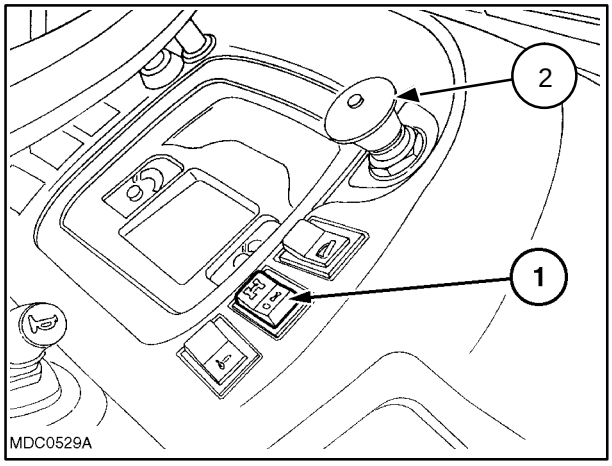

14

FRONT PTO CONTROL PUSHBUTTON (2) − Fig. 14

The button (**1**) engages and disengages the PTO:
− engagement = pull button upwards;
− disengagement = push button downwards.

RIGHT−HAND SIDE OPERATING CONTROLS

Fig. 15

1. Gear lever (see page 2−18, 2−22, 2−33, 2−39 and 2−46).
2. Range lever (see page 2−18, 2−22, 2−33, 2−39, 2−46).

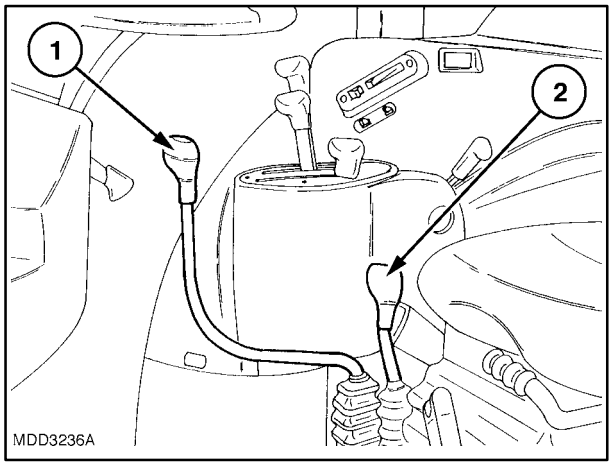

15

Fig. 16

1. and 2. Hydraulic lift lever with mechanical control (see page 2−94).

3. PTO clutch control lever.

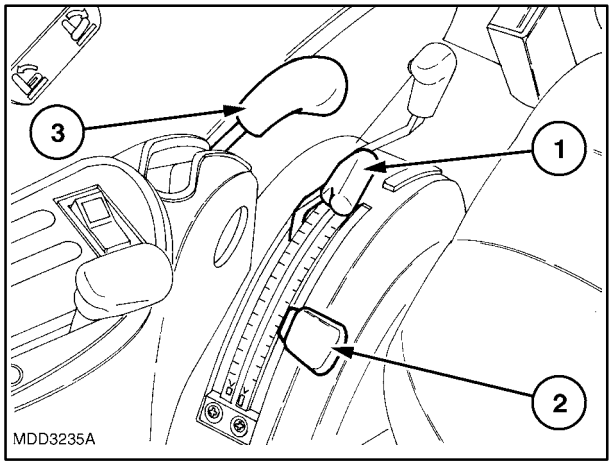

16

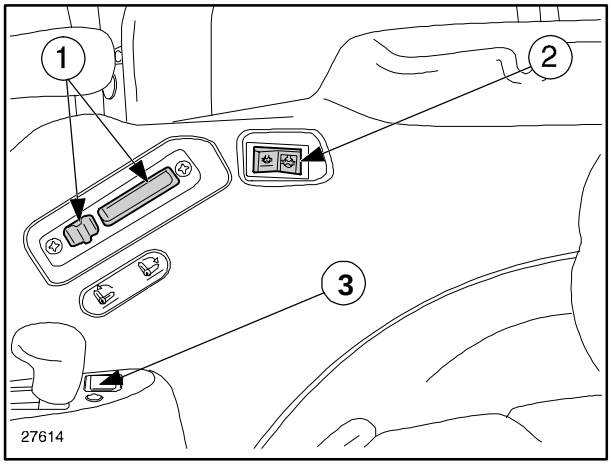

17

right−hand controls (cont.)

Fig. 17

1. LIFT−O−MATIC hydraulic lift rapid up/down push button (**1**) (see page 2−94).
2. Electro−hydraulic differential lock switch;
3. Front work lights control switch.

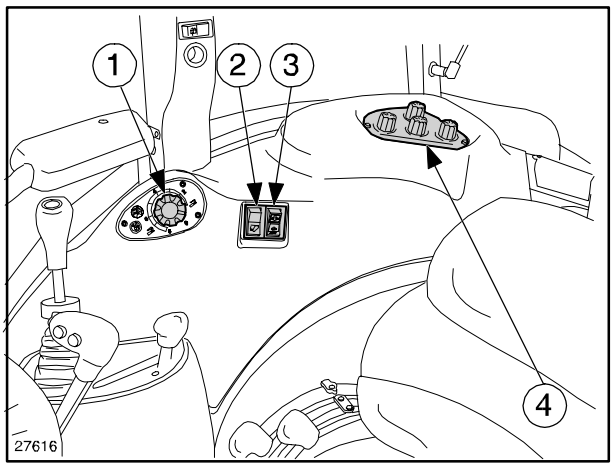

18

ELECTRONIC LIFT CONTROLS − Fig. 18

1. Electronic lift raise/lower control knob.
2. LIFT−O− MATIC switch (see page 2−99).
3. Differential lock electro−hydraulic control push-button.
4. Hydraulic lift settings control.

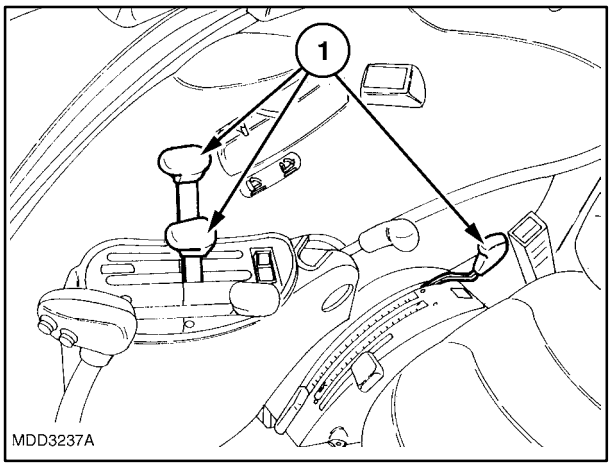

19

AUXILIARY CONTROL VALVE LEVERS − Fig. 19

1. Remote control auxiliary control valve levers.

right−hand controls (cont.)

Fig. 20

1. Auxiliary control valve levers joystick.
2. Hand throttle control lever.
3. Power take−off clutch lever

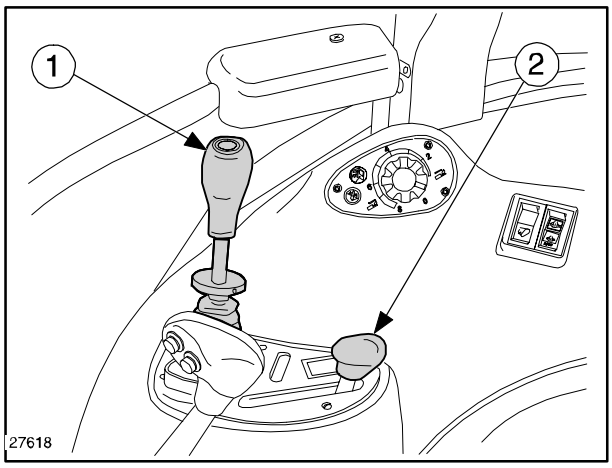

20

EXTERNAL CONTROLS

Fig. 21

1. Hydraulic lift raise/lower push buttons (**1**) (see page 2−100).

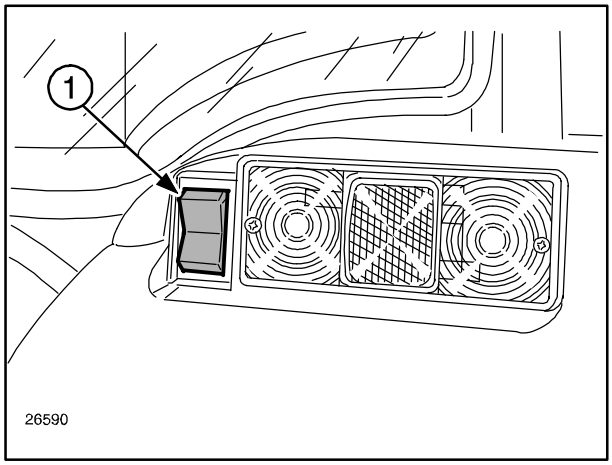

21

LEFT−HAND SIDE CONTROLS

Fig. 22

− Shuttle, shuttle/creeper, shuttle/splitter and shuttle/splitter/creeper control lever (**3**) (see page 2−34).

NOTE: *On the Power−Shuttle/HI−LO version, the lever (**1**) only controls the creeper gear unit.*

− Handbrake lever (**1**).

− Selection lever for independent or synchronised with gears PTO function (**2**) (see page 2−82, 2−83).

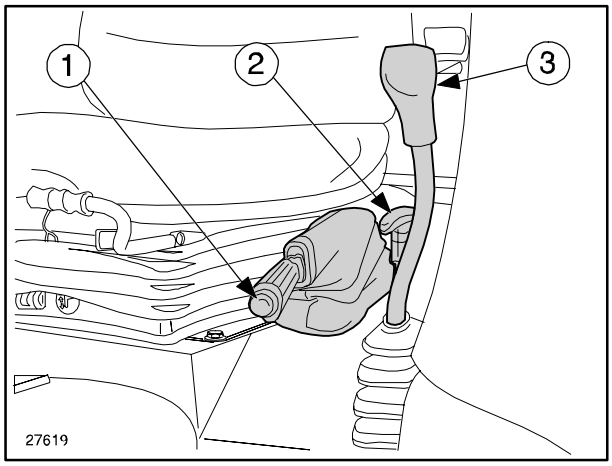

22

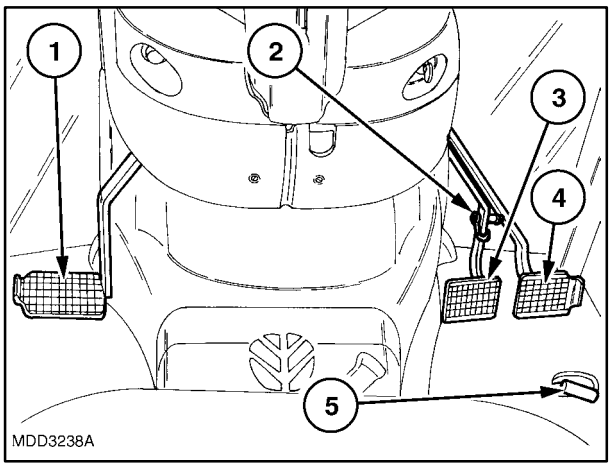

23

PEDAL CONTROLS

Fig. 23

- Pin for joining brake pedals (**2**).
- Right−hand brake pedal (**4**).
- Left−hand brake pedal (**3**).
- Transmission clutch pedal (**1**) (for models with mechanical transmission).
- Start/stop clutch pedals (**1**) (for models with Power−Shuttle/HI−LO transmission).

DANGER: *When travelling on the road, always join the brake pedals together using the pin (**2**). Braking with single pedals can cause the tractor to skid.*

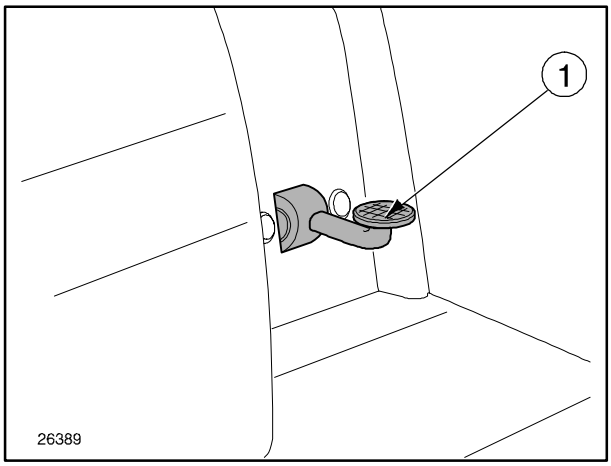

24

Fig. 24

Rear mechanical differential lock pedal (**1**) (see page 2−78).

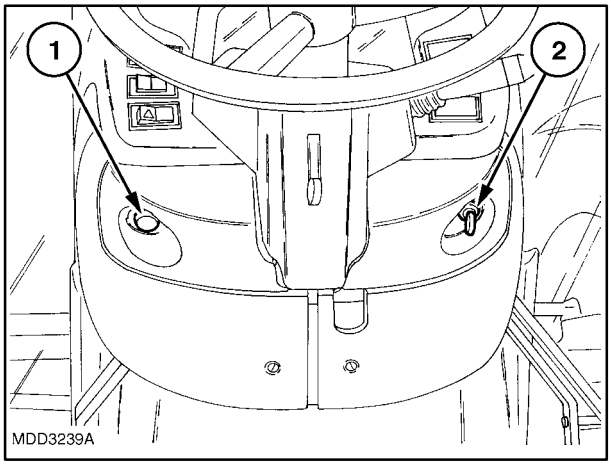

25

CENTRAL CONSOLE PANEL − Fig. 25

- Starter switch (**3**) fig. 25 (see page 2−4).
- Thermostart button (**1**).

The button (**1**) fig. 25 activates the thermostart device, intended for use in cold weather (see page 2−4).

- Power take−off engagement lever (**2**).

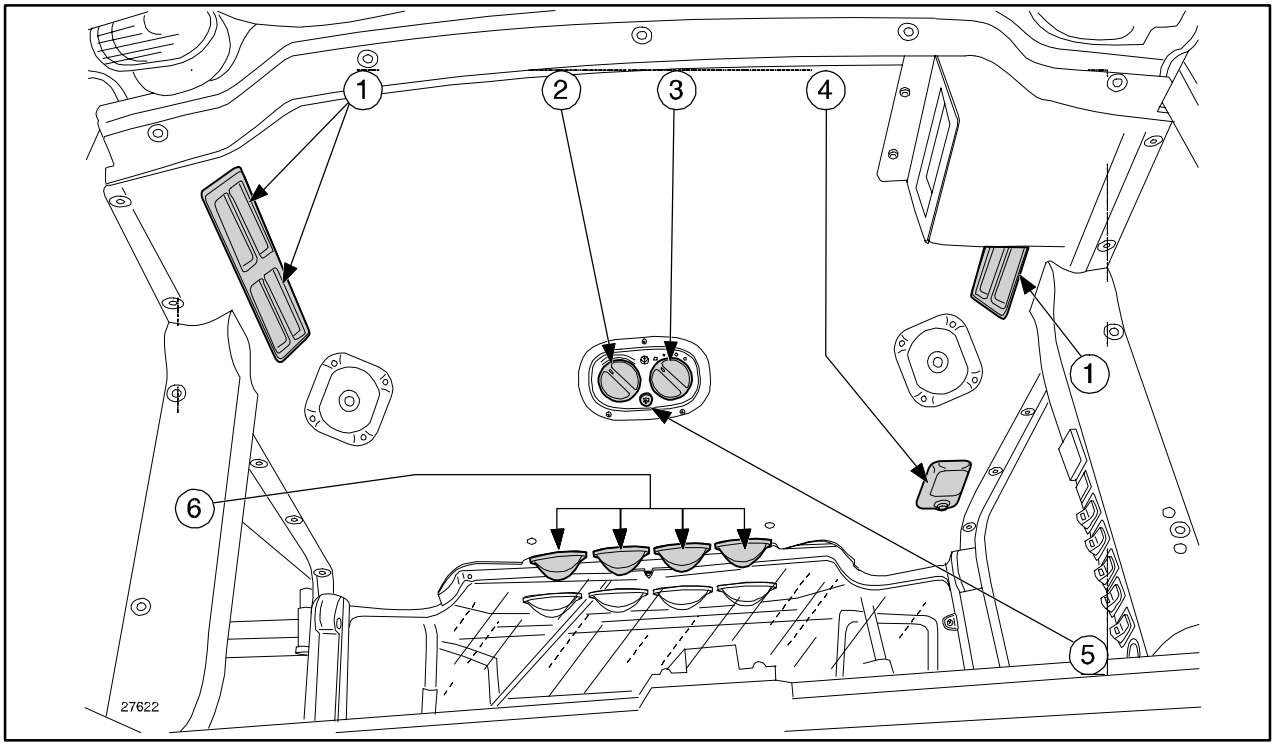

26

Cab controls

1. Cab air re−circulation vents.
2. Heater control knob.
3. Electric fan speed control.
4. Cab interior lights.
5. Air conditioning ON/OFF switch.
6. Front adjustable air vents.

CONTROLS ON RIGHT−HAND CAB UPRIGHT − Fig. 27

- Rotating beacon light ON/OFF switch (**1**).
- Work lights switch (**2**).
- Front windscreen wiper switch (**3**).
- Front windscreen washer switch (**4**).
- Rear windscreen washer/wiper (**5**).
- Differential lock switch (**6**).

NOTE: *The cab controls are described in detail on pages 2−154 to 2−163.*

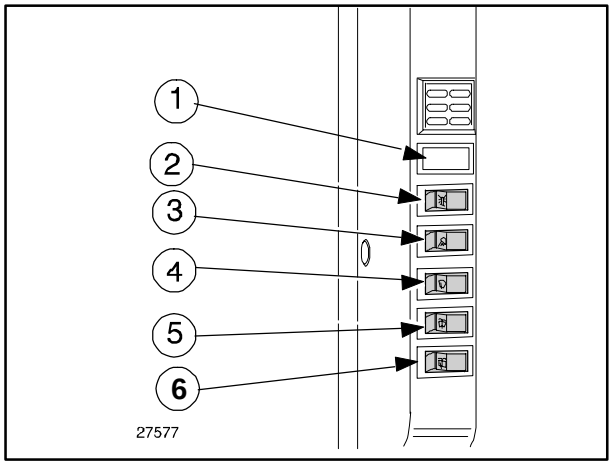

27

TOWING THE TRACTOR

TOWING THE TRACTOR

NOTE: *The tractor must only be towed for short distances, for example from inside a building to the outside. It must never be towed for long distances on the road in heavy traffic.*

NOTE: *To transport the tractor, load it complete with its four tyres onto a truck.*

Should it be necessary to tow the tractor, use a strong chain. Tow the tractor from the rear, using only the drawbar, the rear tow hitch or three point linkage. Tow the tractor from the front using the tow hitch fitted to the front support or ballast.
The tractor must be towed with a driver on board to steer and stop the tractor when necessary.

To avoid damaging the transmission or other components that turn but are not lubricated during towing, observe the following:

1. only tow for short distances;
2. do not exceed 4.97 mph (8 km/h);
3. if possible, run the engine to lubricate the power steering components;
4. position the gear and range levers in neutral.

CAUTION: *Never use ropes or cables to tow the tractor. These may slip or break, with the risk of serious injury to persons in the vicinity.*

CAUTION: *Never exceed 4.97 mph (8 km/h) when towing. Steering is much slower and steering wheel effort is much greater.*

LOADING THE TRACTOR ONTO A TRANSPORTER

TRANSPORTING THE TRACTOR

Load the tractor with all four wheels on the truck platform or flat bed trailer.

Secure the tractor on the vehicle with suitable chains.

Secure the front of the tractor using the towing hitch.

Secure the rear of the tractor using the tow bar or tow bar supports.

WARNING: *Do not hook or connect chains around the front axle transmission shaft, the power steering cylinders, the front axle or other parts of the tractor which may be damaged by the chains or excessive strain.*

WARNING: *On TN70D/S and TN75D/S models, cover the exhaust outlet to prevent the turbocharger rotating in the wind, resulting in possible damage to the bearings.*
The turbocharger turbine must be prevented from rotating freely (with the engine off) as the shaft bearings are not lubricated under these conditions.

CHECKS BEFORE USING THE TRACTOR

Before using the tractor, check that you are familiar with the position and function of all the tractor controls.

Ensure that the maintenance and lubrication operations described in Section 3 of this manual are fully carried out.
After daily maintenance, carry out a visual inspection of the outside of the tractor, paying particular attention to the following points:

1. signs of cracking on the fan belt;

2. accumulation of foreign matter around the engine;

3. signs of leaks or damaged components connected to pressure tubes, sleeves and connectors;

4. damaged tyres;

5. loose fasteners;

6. accumulation of foreign matter or leaks on the hydraulic pump and relative hoses.

Always carry out any necessary repairs before using the tractor again.

NOTES

SECTION 2
OPERATING INSTRUCTIONS

CAUTION: *Before starting the engine and moving the tractor, carefully read the operating and safety instructions in order to avoid potential hazards and safeguard your health.*

This section of the manual is sub−divided into the following topics:

BEFORE USING THE TRACTOR

Read this section of the manual carefully before using the tractor. This is particularly important if the tractor is to be used correctly as it contains all the information required on the layout and use of the tractor controls.

If the tractor is sold or hired−out, this manual must be presented to the new user.

Even if you already have experience in using other tractors, this section of the manual in particular must be studied carefully and thoroughly.

After reading this section in full, ensure that you are fully familiar with the layout and use of the controls. Also make sure that you are aware of the specifications of the tractors in question.

Never start the engine and tractor if you have not already familiarised yourself with all the controls.

Finding out once the tractor is moving may be too late.
If you have any doubts about any functional aspect of the tractor, contact you NEW HOLLAND dealer.

Particular attention needs to be paid to the tractor's running−in period, to obtain the best operating reliability and service life for which it is designed and built.

With regard to the reliability and service life of your tractor, study Section 3 carefully.

Section 3 contains details of all the lubrication and general maintenance operations to be carried out on the tractor.

The tractor specifications are shown in Section 5.

OPERATING INSTRUCTIONS

CAUTION: *Before starting the engine and moving the tractor, follow the instructions noted below:*

— *do not start or operate the tractor in an enclosed area.*

— *before starting the engine, check that all controls are in neutral.*

— *all controls must only be operated from the driving position.*

— *stop the engine before carrying out any service or maintenance operations on the tractor.*

— *use the steps provided for entering and leaving the tractor.*

— *keep the guards properly fitted.*

— *when driving on roads, indicate all intentions to stop, turn or slow down.*

— *use the appropriate warning devices to signal the presence of a slow−moving vehicle.*

STARTING THE ENGINE

a. If the tractor has not been used for some time, or is started up for the first time in low outside temperature conditions, operate the fuel pump starting lever approximately twenty times.

b. Press down the clutch pedal, place the shuttle control lever in neutral to close the starting safety device switch.

c. Move the throttle lever to approximately the half−way position.

d. Turn the starter key to position **C** (fig. 1, page 2−4). Release the key as soon as the engine starts.

NOTE: *If the engine does not start, check that the PTP clutch lever is fully back (neutral position).*

HOW TO START AND STOP

STARTING IN LOW OUTSIDE TEMPERATURE CONDITIONS

WARNING: *When the outside temperature is low and the engine is cold, read the following warnings before starting:*

— *to avoid running down the battery, any single engine starting attempt should not last longer than 15 seconds; if, however, the engine fires but does not start, continue the attempt up to a maximum of 30 seconds;*

— *wait for at least one minute between each attempt to start the engine;*

— *to avoid excessively running down the battery, do not make more than six attempts to start the engine.*

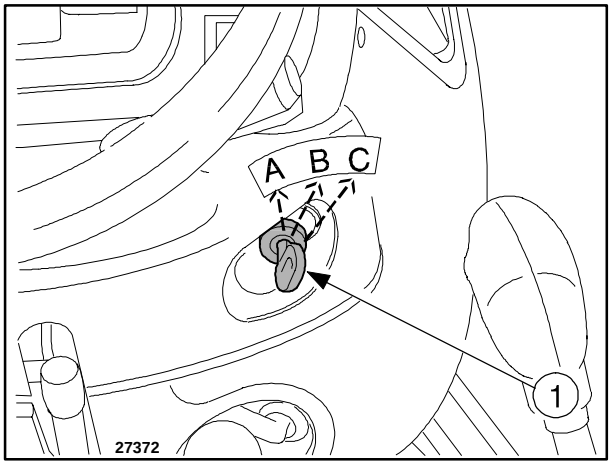

1

STARTER KEY SWITCH − Fig. 1

To obtain the three key switch functions (**1**) turn the key to the following positions:

A. No power supply to any of the circuits (key can be removed). Engine stops: injection shut−off device cuts−in automatically.

B. Stand−by for engine start up. Indicator and control instruments ON. Various users powered up.

C. Engine start up: if released, the key returns automatically to position (**B**).

STARTING WITH THE THERMOSTART

Start as follows:

— carry out operations **a**, **b**, **c**, as previously described on page 2−3;

— turn the key (**1**) fig. 1 of the starter switch (**1**) fig. 1 to position **B**;

— turn on the thermostart by pressing pushbutton (**1**) fig. 2 in the direction shown by the arrow, and hold in position for 25 seconds;

— move the starter switch key (**1**) fig. 1 to position **C** holding down the push button (**1**) fig. 2 until the engine starts;

— once the engine has started release both the key and the push button. If, after two or three attempts the engine has not started, and black smoke is noted coming from the exhaust, start the engine without using thermostart.

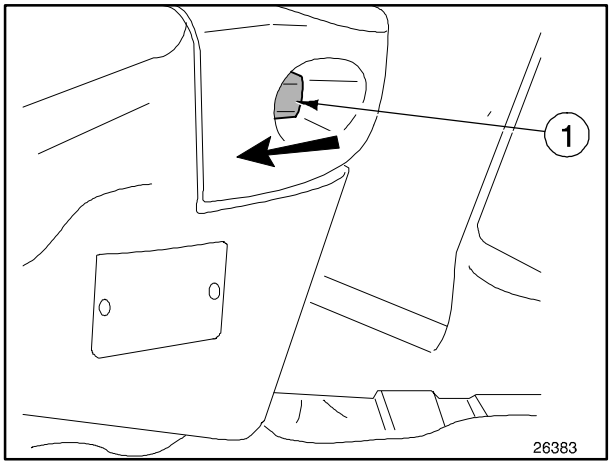

2

CAUTION: *When starting the engine after extended periods of non−use, avoid using the hydraulic system immediately. This is because all moving parts will require lubrication before they are subject to full loads.*
Especially when the external temperature approaches 32 °F (0 °C), run the engine at 1300 ÷ 1500 rpm for approximately 5 minutes in order to heat the oil in the rear transmission to working temperature.

CAUTION: *on the TN70D/S and TN75D/S models, before accelerating or starting the tractor, allow the engine to idle at 1000 rpm for 30 seconds to ensure that the turbocharger is correctly lubricated.*

CAUTION: *If one of the warning lights illuminates to signal a fault, check and repair the faulty part.*
If the warning light continues to signal a fault, have the tractor checked by trained personnel at your NEW HOLLAND dealer.

CAUTION: *With outside temperatures below 32 °F (0 °C), in order to prevent separation of the paraffin components in the diesel fuel, leading to a reduction in fluidity and subsequent fuel supply problems (especially when starting the engine),* ***mix the diesel fuel with «Diesel Mix AREXONS»*** *antifreeze (or a similar product) in the proportions described on the container.*

The ***«Diesel Mix AREXONS»*** *antifreeze must be mixed with the diesel fuel before there is any sign of paraffin separation; if added later it will have no effect on an engine that has already been jammed by low temperatures.*

First pour the antifreeze into the tank, followed by the diesel fuel.

*The «****Diesel Mix AREXONS»*** *will guarantee optimum fuel supply to the engine, without reducing performance, even at outside temperatures of below −4 °F (−20 °C).*

STARTING THE TRACTOR

— Sit correctly in the driving position.

— Press the transmission clutch pedal and move the gear lever and range lever to the desired positions.

— Accelerate the engine.

— Release the handbrake.

− For tractors with mechanical transmissions, engage the clutch by slowly releasing the relative pedal.

− For tractors with hydraulic transmissions, lift the Power Shuttle lever, moving it slowly in the required travel direction (this operation can only be carried out when seated in the driving position).

STOPPING THE TRACTOR

— Reduce engine speed.

— Press the transmission clutch pedal and apply the brakes.

When the tractor is stationary, move the main shift and range gear levers to neutral, release the clutch pedal and engage the handbrake.

STOPPING THE ENGINE

CAUTION: *On the TN70D/S and TN75D/S models, before stopping the engine, allow it to idle at 1000 rpm for at least 3 minutes.*

— Turn the starter key to the **STOP** position (**A** fig. 1, page 2−4).

ANALOGUE CONTROL PANEL

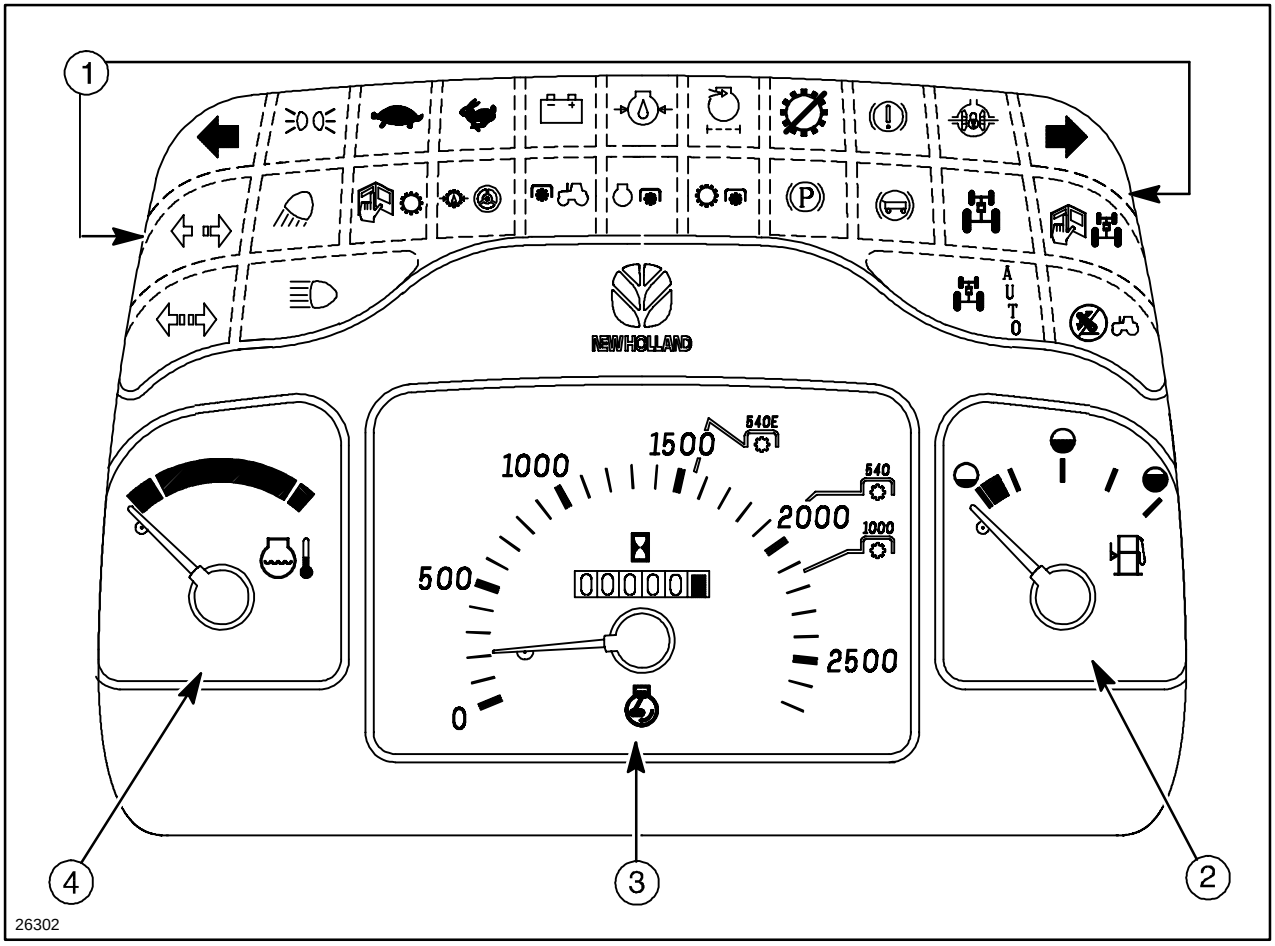

3

1. Indicator light panel.

2. Fuel gauge.

3. Analogue rev counter/hourmeter.

4. Engine coolant temperature gauge.

DIGITAL INSTRUMENT PANEL

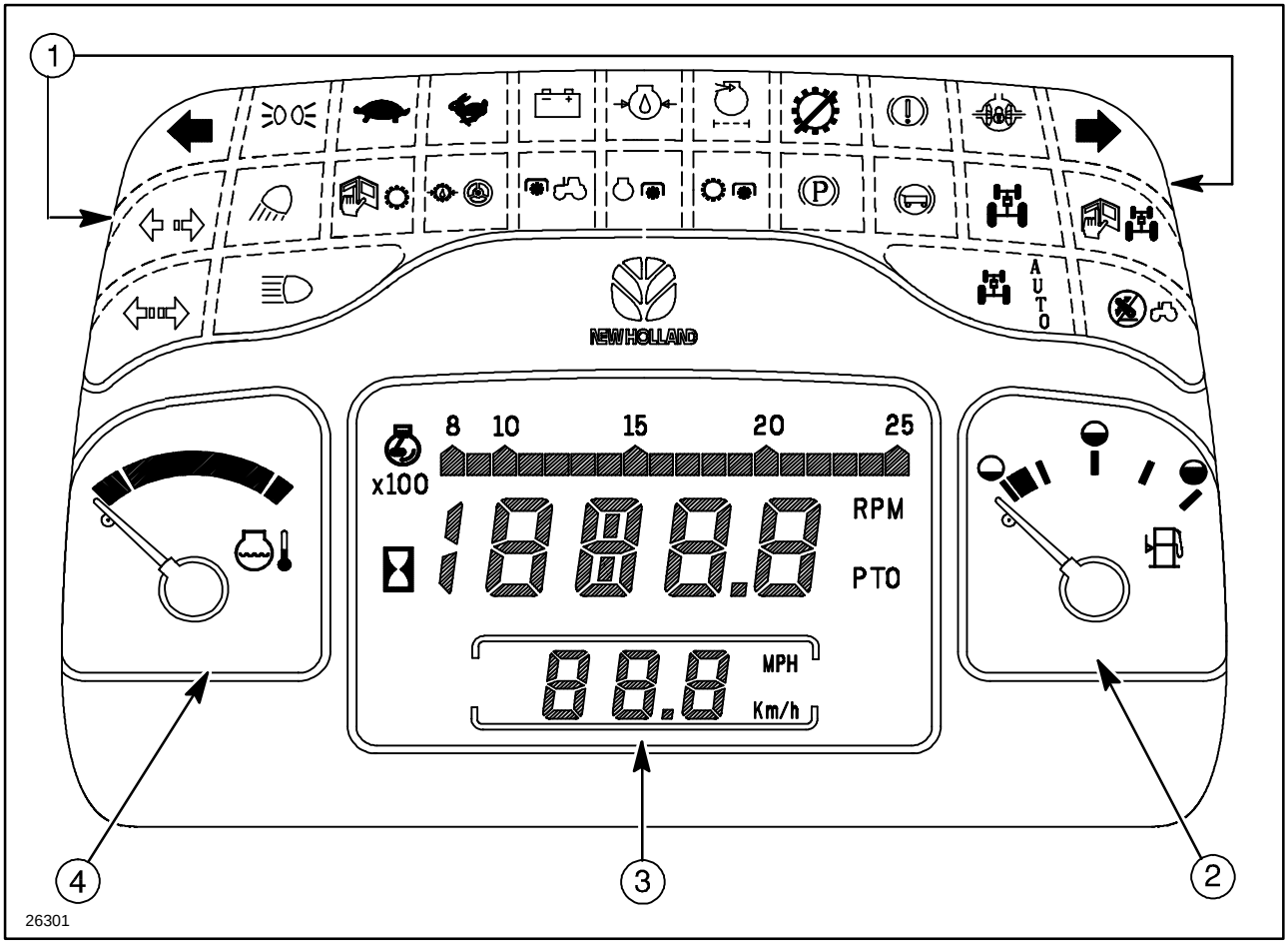

4

1. Indicator light panel.

2. Fuel gauge.

3. Electronic module (functions: hourmeter, power take−off rev counter, clock and digital electronic speedometer).

4. Engine coolant temperature gauge.

OPERATION INDICATOR LIGHTS

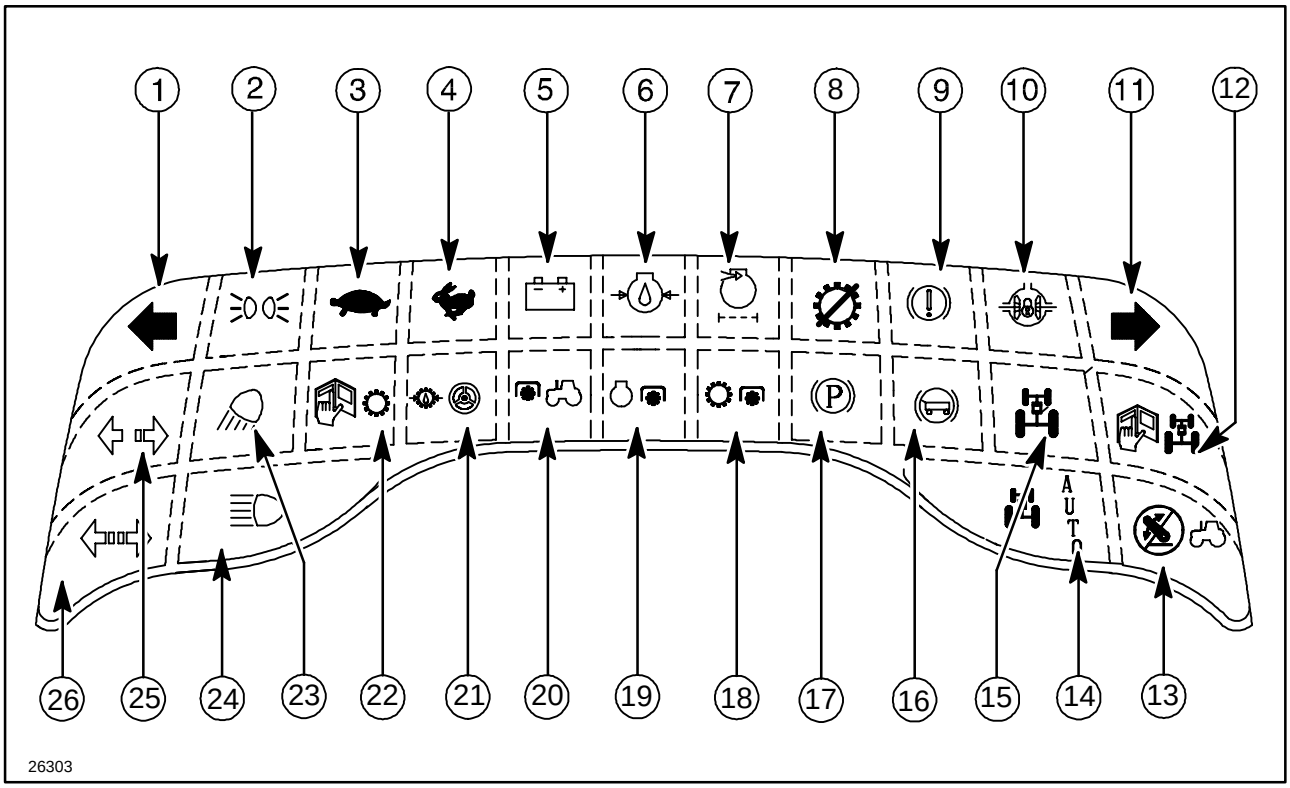

5

1. Left−hand turn indicator (green).
2. Side lights indicator (green).
3. Low gear range light with Power−Shuttle/HI−LO (yellow).
4. High gear range light with Power−Shuttle/HI−LO (green).
5. Alternator low charge warning light (red).
6. Engine oil pressure warning light (red).
7. Dry air filter clogged light (yellow).
8. Not used.
9. Low brake fluid level warning light (red).
10. Differential lock engaged light (yellow).
11. Right−hand turn indicator (green).
12. Permanent four−wheel drive alarm light (red).
13. Front lift disabled light (if fitted) (orange).
14. Automatic four−wheel drive engaged light (green).
15. Permanent four−wheel drive engaged light (green).
16. Trailer brake ON light (yellow).
17. Handbrake ON light (red).
18. Synchronized power take−off light (yellow).
19. Power take−off engaged light (yellow).
20. Front power take−off engaged light (yellow).
21. Transmission and/or power steering low oil pressure light (red).
22. Power−Shuttle/HI−LO alarm light (red).
23. Working lights indicator (yellow).
24. Full−beam indicator light (blue).
25. Direction indicator light 1st trailer (green).
26. Direction indicator light 2nd trailer (green).

Figure 6

1. Left−hand turn indicator.

Flashes at the same time as the left−hand turn indicators.

2. Side lights indicator.

Lights up when the side lights are switched on.

3. Low gear range engaged indicator.

Lights up when the low gear range is selected (transmission with Power−Shuttle/HI−LO).

4. Power−Shuttle/HI−LO alarm light.

Lights up in the event of a control unit or operating system fault (see page 2−51).

5. Full−beam indicator light.

Lights up when the headlights are on full beam.

6. Working lights indicator.

Lights up when the working lights are switched on (cab models only).

7. 2nd trailer direction indicator light.

Flashes at the same time as the tractor indicators, if connected.

8. 1st trailer direction indicator light.

Flashes at the same time as the tractor indicators, if connected.

Figure 7

1. High gear range engaged indicator.

Lights up when the high gear range is selected (transmission with Power−Shuttle/HI−LO).

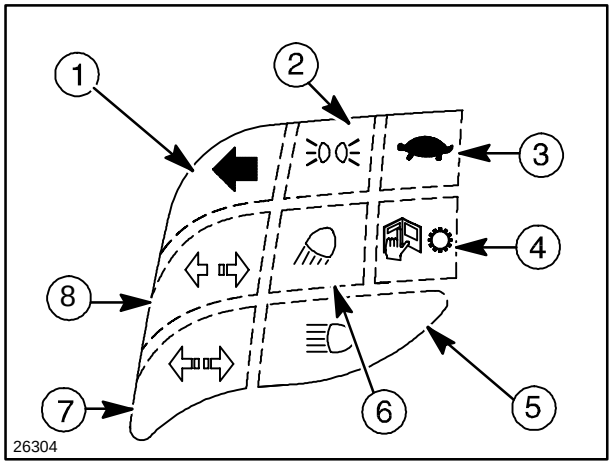

6

2. Battery charging system warning light.

Should switch off as soon as the engine starts.

If the light stays on when the engine is running, stop and find the cause of the problem.

May light up when the engine is idling, but does not necessarily indicate a fault.

3. Low engine lubrication oil pressure indicator.

Should go out a few seconds after the engine is started.

If the light stays on when the engine is running, stop and find the cause of the problem.

If the light stays on, particularly when the tractor is moving, contact your dealer.

When the engine is warmed up and idling, with the tractor stationary, the indicator may light up without necessarily indicating a fault.

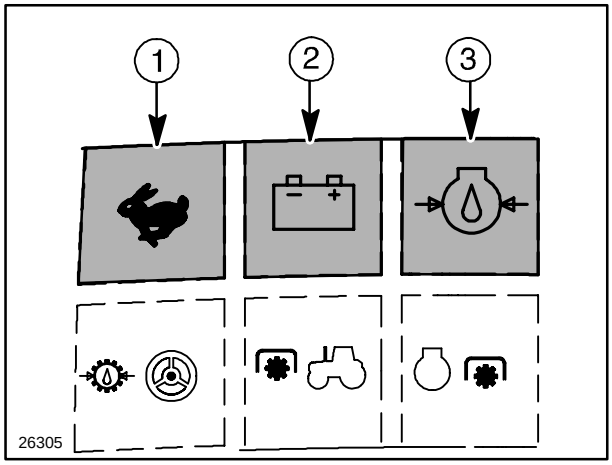

7

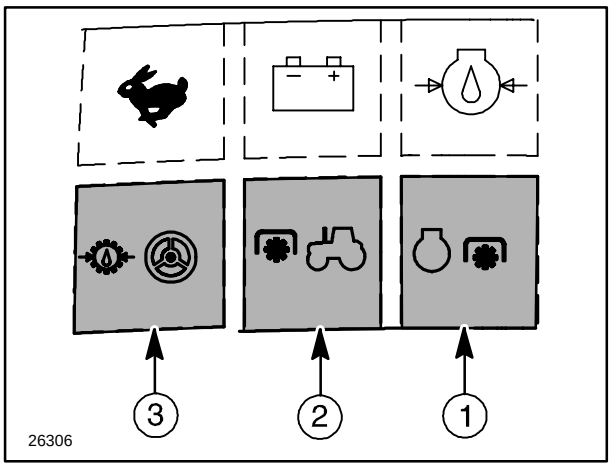

8

Figure 8

1. PTO engaged indicator light.

Lights up when the engine is running and the power take−off is engaged.

2. Front power take−off engaged indicator.

Lights up when the engine is running and the front power take−off is engaged.

3. Transmission and/or power steering low oil pressure indicator.

Should go out a few seconds after the engine is started. If the light stays on, particularly when the tractor is moving, contact your dealer. When the engine is warmed up and idling, with the tractor stationary, the indicator may light up without necessarily indicating a fault.

Figure 9

1. Dry air filter clogged indicator.

Lights up when the air filter cartridge is partially or totally clogged.
Stop the tractor and clean the cartridge as described in operation 6, page 3−9.

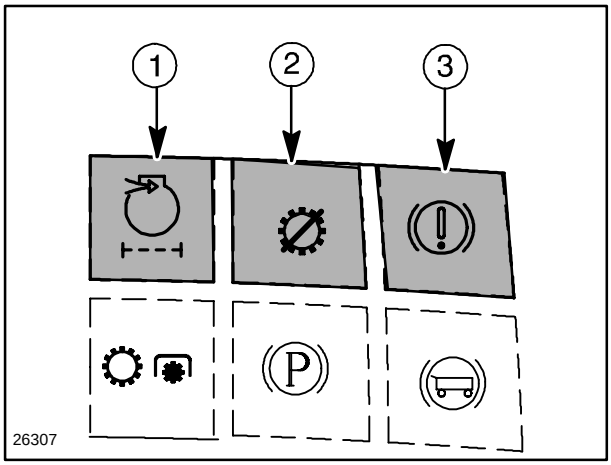

9

2. Transmission status indicator, for models with 8+8 and 16+16 transmissions with Power Shuttle.

The indicator comes on when there is a problem with the Power Shuttle system.

3. Low brake fluid level indicator.

Comes on when the fluid drops below “MIN.” level. Check periodically that the light is working properly by turning the ignition key to the first position and pressing the lid of the brake fluid reservoir; the light should come on.

Figure 10

1. Trailer brake ON indicator.

Lights up with the engine running, each time the coupled tractor brakes are applied, as when driving on the road.
The indicator also lights up when the handbrake is ON or when the brake fluid pressure is low.

2. Handbrake ON indicator light.

Lights up when the handbrake is ON (with starter key inserted).

CAUTION: *For your personal safety, always apply the tractor handbrake before leaving the driving position.*

3. Synchronized power take−off indicator light.

Lights up when synchronised power take−off is selected.

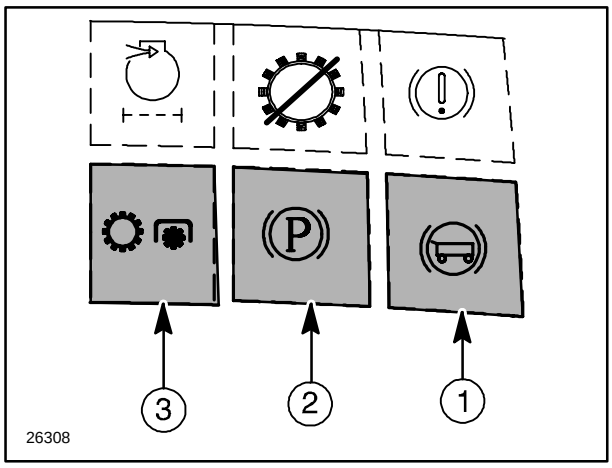

10

Figure 11

1. Differential lock engaged indicator.

Lights up when the differential lock is ON.

2. Right−hand turn indicator.

Flashes at the same time as the right−hand direction indicator.

3. Permanent four−wheel drive alarm indicator.

Lights up together with the indicator (**6**).

4. Front lift unit disabled indicator.

Lights up when the front lift unit is disabled, or lights up briefly when the engine is started (even if the tractor is not fitted with a front lift).

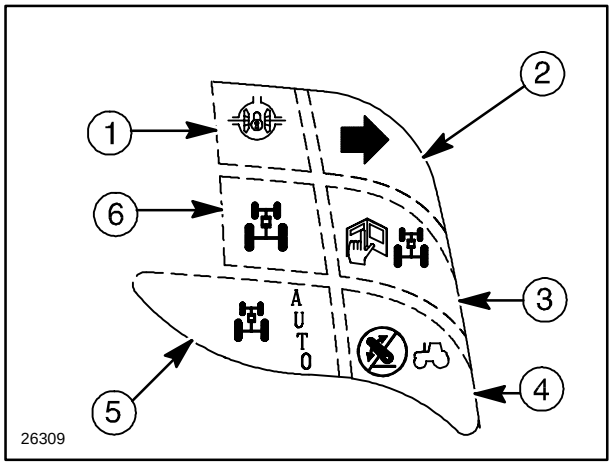

11

5. Automatic four−wheel drive engaged indicator.

Lights up when front−wheel drive is engaged automatically.

6. Permanent four−wheel drive engaged indicator.

Lights up when permanent four−wheel drive is selected by means of the relevant push button.

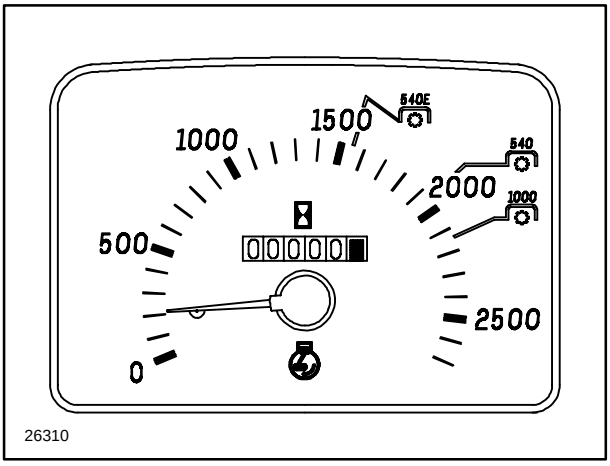

12

Figure 12

Rev counter/hourmeter.

This shows engine rpm and total time worked up to a maximum of 6 digits: the figures on the black background show the sum of the hours worked, whereas the figure on the red background (last on the right) shows the tenths of the hour.
The green and blue sectors show the number of engine rpm required to reach standard power take−off speed, respectively 540, 540 E and 1000 rpm.

- Green mark = PTO at 540 rpm.
- Blue mark = PTO at 540E and 1000 rpm.

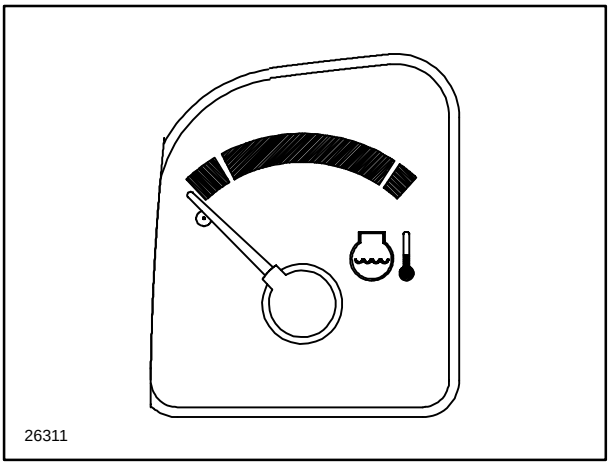

13

Figure 13

Engine cooling liquid temperature indicator.

- Green zone = normal temperature.
- White zone = temperature too low.
- Red zone = engine overheating.

In this case, slow the engine to idling speed (without stopping the engine) and, if the light stays on, have the cooling system checked.

Figure 14

Fuel gauge.

Indicates the tank fuel level.
When the tank is full, the needle is positioned fully to the right−hand side.
When the fuel level falls below 1/4, the needle moves into the red area.

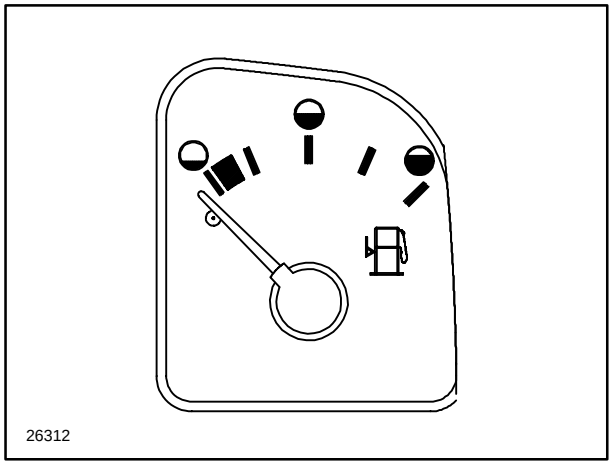

14

Figure 15 and 16

Electronic control module.

The digital electronic control module is located on the instrument control panel, and is divided into three sectors:

- sector (**1**) fig. 15 provides a permanent indication of the engine rpm by means of a graphic bar display;

- sector (**2**) fig. 15 displays the engine rpm in numerical values, the number of hours worked, PTO rpm and the time.
  To select one of the four functions mentioned above, press the **CAL** selection push button (**1**) fig. 16;

- sector (**3**) fig. 15 shows the tractor speed in km/h or Mph.

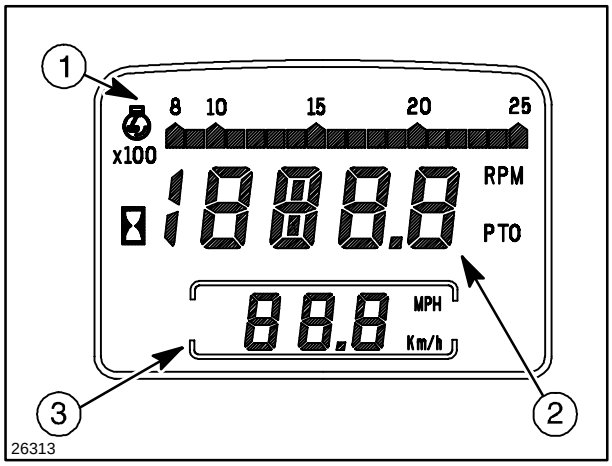

15

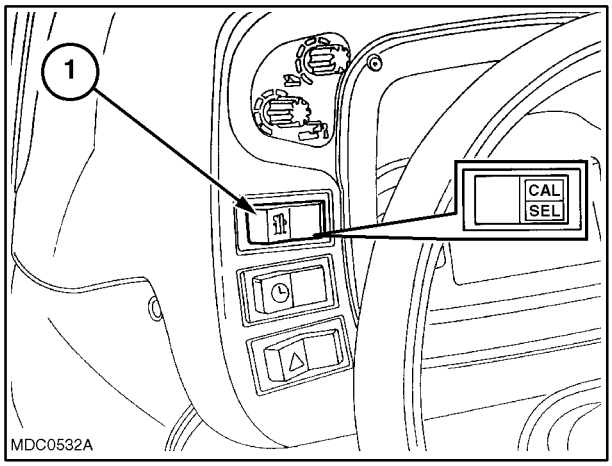

16

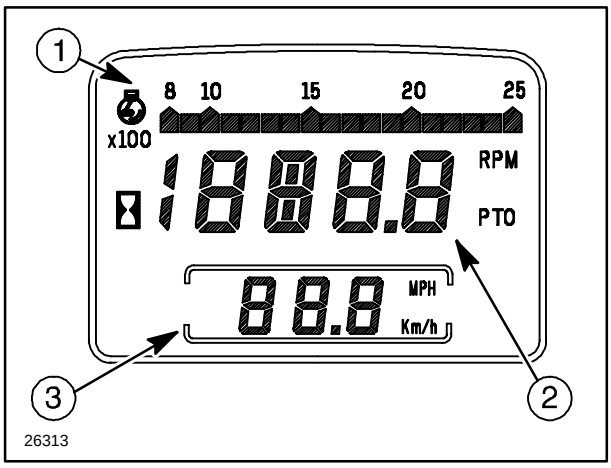

17

ELECTRONIC MODULE OPERATION

Figure 17, 18, 19, 20 and 21

When the engine is switched on, the graphic bar display lights up for about 2 seconds.

Sector 1

Sector (**1**) fig. 17 shows the engine rpm on the graphic bar display. Each segment corresponds to 100 rpm of the engine. The first segment lights up when the engine is idling, with the following segments lighting up for each 100 rpm.

Sector 2

Sector (**2**) fig. 17 displays the following functions in the order noted below:

- number of hours worked;
- engine rpm;
- power take−off rpm;
- clock.

To select one of the four functions mentioned above, press the **CAL** selection push button (**1**) fig. 18 until the required function appears on the central display (sector **2** fig. 17).

Hours of work

When the engine is started, the electronic module displays the number of hours worked in sector (**2**) fig. 17.
The number of hours is displayed from 0.0 to 1999.9.

NOTE: *If the tractor battery is disconnected or replaced, data loss from the "total hours worked" memory is restricted to a maximum of one hour.*

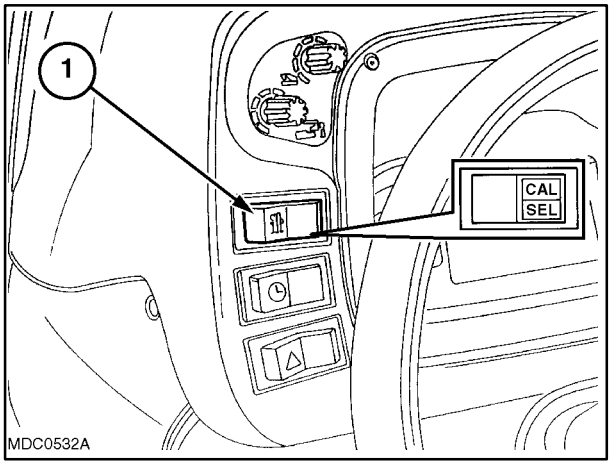

18

Engine rpm.

Engine rpm is shown automatically in numerical form when the engine is started. Whilst the display shows the engine rpm, the message **RPM** will appear.

Power take−off rpm.

To select power take−off when reading engine rpm, press push button (**1**) fig. 18.
Power take−off rpm is shown in numerical form. When this function is selected, the message **PTO** will appear.

Clock.

The instrument is also fitted with a clock function. To display the time, press push button **CAL** (**1**) fig. 20 until it appears on the central display, sector (**2**) fig. 19.

NOTE: *The clock shows the hour and minutes, whereas the seconds are indicated by two vertical flashing bars.*

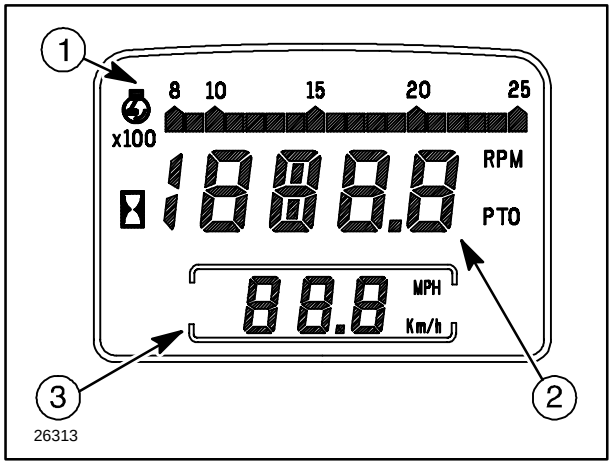

19

Adjusting the time.

After having called up the clock function on the central display, by pressing the **CAL** push button, keep the button (**2**) fig. 20 held down until the time starts flashing.

To correct the minutes, press push button (**2**) fig. 20 on the right−hand side **A**; each press will move the time forward by one minute. By holding the push button down, the minutes will advance rapidly.

To change the hours, follow the same procedure as for the minutes, but press push button (**2**) fig. 20 on the left−hand side **B**.

NOTE: *During time adjustment operations, the hours and minutes will stop flashing.*

At the end of time adjustment operations, the hours and minutes will start flashing once more; press push button **CAL** again to store the time. The electronic module will automatically switch to the “hours worked” function.

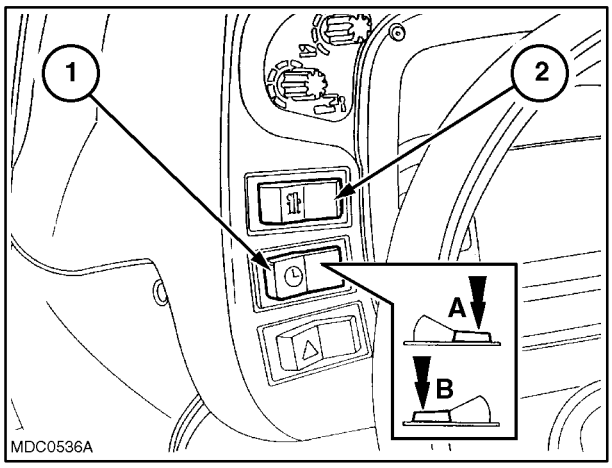

20

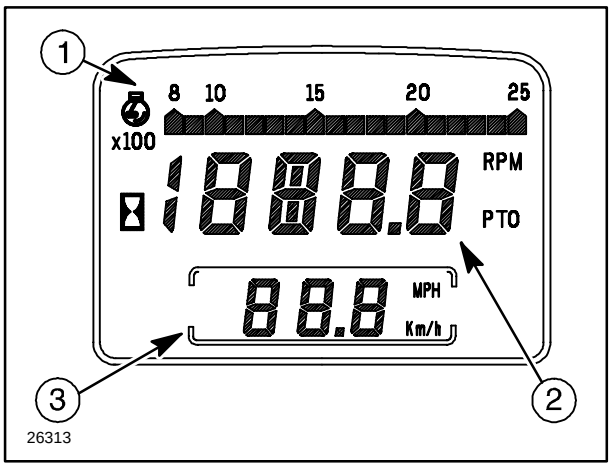

21

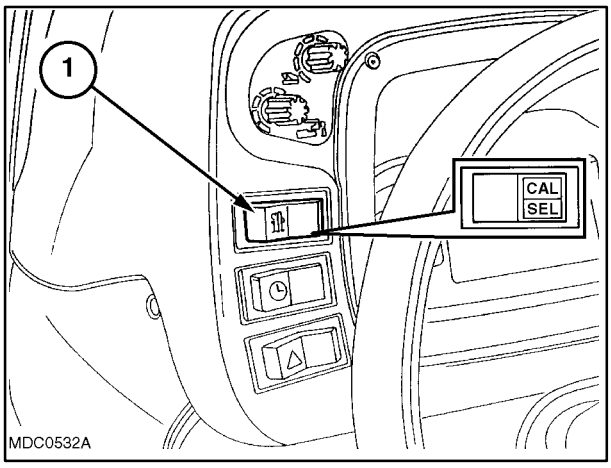

22

Sector 3

When you start the engine, the value displayed is zero. When the tractor is moving, the display will show a minimum speed of 3.10 mph (0.5 km/h) to a maximum speed of 620.74 mph (99.9 km/h).

To switch from km/h to mph and vice versa, turn the key to “key on”, whilst holding down the **CAL** button (**1**) fig. 22 so that the message km/h or mph starts flashing.

With mph flashing, press the **CAL** push button (**1**) fig. 22 to set the instrument to km/h; with km/h flashing, press the same button to switch to mph.

These functions are saved when the tractor is started.

The speed is always displayed, either in km/h or mph, except when the instrument is being calibrated.

CALIBRATING THE INSTRUMENT

In order to measure speed correctly, the instrument must be calibrated to compensate for possible variations in the radius of the tyres under load (for example, due to different types of tyre or different operating weights, etc.).

To calibrate the instrument, follow the instructions set out below:

- mark out a distance of 3937 inch. (100 meters) on the ground;
- press the **CAL** button (**1**) fig. 22 for 3 seconds, until the message **CAL** appears (without flashing) on the central sector (**3**) fig. 21. On the central sector (**2**) fig. 21, the currently selected calibration constant should appear simultaneously. Sector (**3**) fig. 21 will continue to show the **CAL** message, together with the previously set unit of measurement;
- set a steady tractor speed between 2.48 and 6.21 mph (4 and 10 km/h) and press the **CAL** button (**1**) fig. 22 at the beginning of the marked 3937 inch. (100 meters) distance; the **CAL** message should start flashing and the value previously displayed in sector (**2**) fig. 21;
- at the end of the marked distance press the **CAL** (**1**) fig. 22 again to store the new calibration constant;
- this automatically terminates the calibration procedure and sector (**3**) fig. 21 will show the speed calculated according to the new constant whilst sector (**2**) fig. 21 will show the engine rpm.

LIGHT CONTROL LEVER

The light control lever controls the direction indicators, headlight full beam flasher and the switch from full beam to dipped headlights on the tractor front lights.

Direction indicators.

To indicate a left−hand turn, push the lever (**1**) fig. 23 forwards to position **A**.
To indicate a right−hand turn, pull the lever backwards to position **B** fig. 23.
When the direction indicators are ON, indicator lights (**1**) or (**11**) fig. 5, page 2−8, on the control panel start flashing.

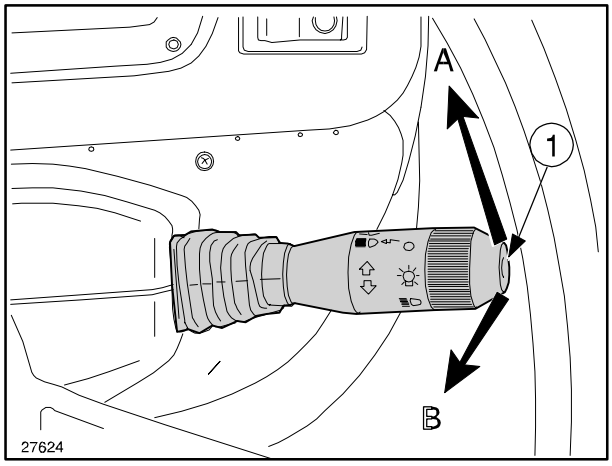

23

Flashing the headlights.

With the lights OFF or dipped, push the lever upwards to position **C** fig. 24 to flash the full beam lights. When released, the lever will automatically return to the original position **D**.

NOTE: *The light selector knob (**5**) fig. 25, operates when the starter switch is in position **B** fig. 1, page 2−4.*

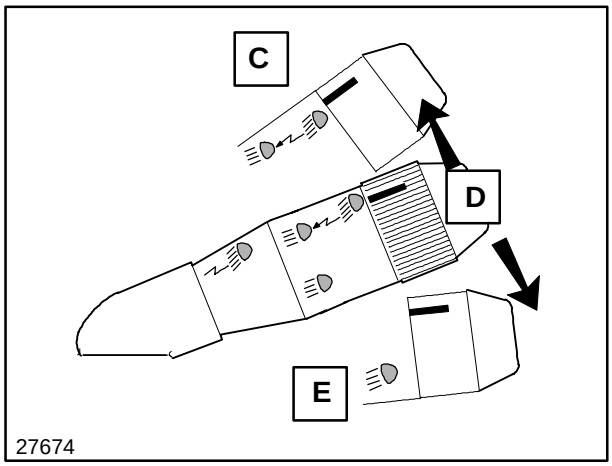

24

Side lights.

With lever (**1**) in position **D** turn the index mark (**4**) on the knob (**5**) until it coincides with symbol (**2**). The side lights and the control panel will illuminate.

Dipped lights.

With lever (**1**) in position **D** turn the index mark (**4**) on the knob (**5**) until it coincides with symbol (**6**).

Full beam

With the lights on dipped beam, move lever (**1**) downwards to position **E** until the lever stops (**1**).

Horn.

Press the horn button (**5**) fig. 25 on the end of the knob, as indicated in the drawing.

NOTE: *With index mark (**4**) coinciding with symbol (**3**) all of the lights are off. Only the direction indicators and horn remain operative.*

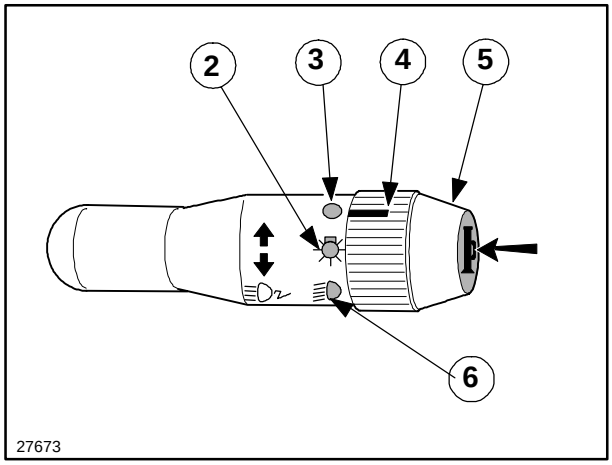

25

TRANSMISSION WITH RANGE GEAR AND ELECTRO−HYDRAULIC SHUTTLE 18.64/24.85 mph (30/40 km/h) (8F+8R) (Not available on all markets)

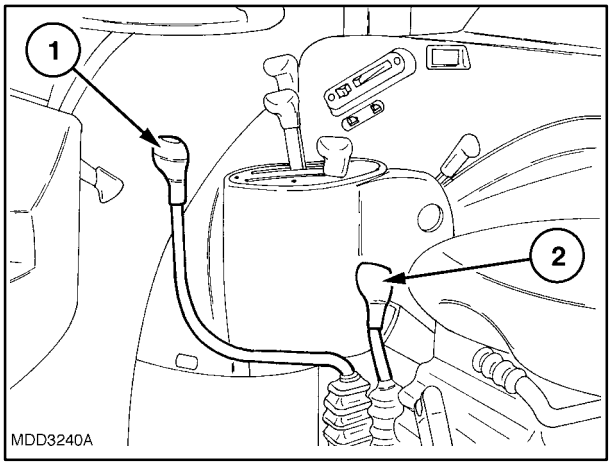

26

CAUTION: *With the engine running and only one gear lever in neutral, the tractor could be engaged and start moving if the lever is accidentally operated, which may lead to possible accidents. To avoid this hazard, move both levers to neutral, disengage the power take−off, lower any implements and apply the handbrake before leaving the tractor.*

NOTE: *In order to start the engine move the lever* (**1**) fig. 30 *to the neutral position. The clutch pedal must also be pressed fully down.*

The gear lever (**1**) fig. 26 selects four gear ratios (**1**, **2**, **3**, **4**).

The range lever (**2**) fig. 26 provides two ranges:

— **A** = slow;

— **C** = fast;

— **P** = neutral position.

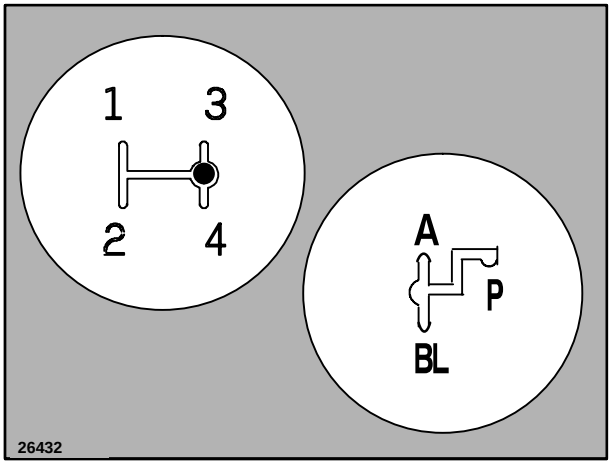

27

Separate use of the gear lever (**1**) fig. 26, the range lever (**2**) fig. 26 and the shuttle lever (**1**) fig. 30 allows **8** forward gears and **8** reverse gears to be selected.

NOTE: *The neutral position of the gear lever (**1**) fig. 26 and the range lever (**2**) fig. 26 is shown by the black dot.*

The tractor must always be stopped to change from one range to another. To change from one speed to another within the same range, disengage the clutch and move the gear lever (the tractor does not need to be stationary as the gears are synchro−engaged).

SPEED AT MAXIMUM POWER
Transmission with Power Shuttle 18.64 mph (30 km/h) version (8F+8R)

MODEL TN55S (Forward drive speed)

RANGE	GEAR	REAR TYRES km/h (mph)			
		16.9−28	14.9−28	13.6−28	16.9−24
A	1	2.4 (1.49)	2.3 (1.42)	2.21 (1.36)	2.2 (1.36)
	2	3.6 (2.23)	3.4 (2.11)	3.3 (2.05)	3.3 (2.05)
	3	5.3 (3.29)	5.0 (3.10)	4.8 (2.98)	4.9 (3.04)
	4	7.8 (4.84)	7.5 (4.66)	7.1 (4.41)	7.2 (4.47)
BL	1	9.4 (5.84)	9.0 (5.59)	8.6 (5.34)	8.7 (5.40)
	2	14.0 (8.69)	13.4 (8.32)	12.8 (7.95)	13.0 (8.07)
	3	20.6 (2.80)	19.7 (12.24)	18.8 (11.68)	19.1 (11.86)
	4	30.6 (19.01)	29.2 (18.14)	27.8 (17.27)	28.3 (17.58)

MODEL TN55D TN55S (Forward speed)

RANGE	GEAR	REAR TYRES km/h (mph)			
		TN55D TN55S		**TN55D**	
		14.9−24	22.5LLX16.1	21.5L−16.1	44X18.00−20
A	1	2.1 (1.30)	1.7 (1.05)	1.8 (1.11)	1.9 (1.18)
	2	3.2 (1.98)	2.5 (1.55)	2.8 (1.73)	2.9 (1.80)
	3	4.6 (2.85)	3.7 (2.29)	4.1 (2.54)	4.2 (2.60)
	4	6.7 (4.16)	5.4 (3.35)	6.1 (3.79)	6.2 (3.85)

BL	1	8.3 (5.15)	6.5 (4.03)	7.3 (4.53)	7.5 (4.66)
	2	12.4 (7.70)	9.7 (6.02)	10.9 (6.77)	11.2 (6.95)
	3	18.2 (11.30)	14.3 (8.88)	16.0 (9.94)	16.4 (10.19)
	4	26.9 (16.71)	21.2 (13.17)	23.7 (14.72)	24.3 (15.09)

SPEED AT MAXIMUM POWER
Transmission with Power Shuttle 18.64 mph (30 km/h) version (8F+8R)

MODEL TN55S Reverse speed

RANGE	GEAR	REAR TYRES km/h (mph)			
		16.9−28	14.9−28	13.6−28	16.9−24
A	1	2.3 (1.42)	2.2 (1.36)	2.1 (1.30)	2.2 (1.36)
	2	3.5 (2.17)	3.3 (2.05)	3.2 (1.98)	3.2 (1.98)
	3	5.1 (3.16)	5.0 (3.10)	4.7 (2.92)	4.7 (2.92)
	4	7.6 (4.72)	7.2 (4.47)	7.0 (4.34)	7.0) (4.34)
BL	1	9.1 (5.65)	8.7 (5.40)	8.3 (5.15)	8.4 (5.21)
	2	3.6 (2.23)	13.0 (8.07)	12.4 (7.70)	12.6 (7.82)
	3	20.0 (12.42)	19.1 (11.86)	18.20 (11.30)	18.5 (11.49)
	4	29.6 (18.39)	28.3 (17.58)	27.0 (16.77)	27.4 (17.02)

MODEL TN55D TN55S Reverse speed

RANGE	GEAR	REAR TYRES km/h (mph)			
		TN55D TN55S		**TN55D**	
		14.9−24	22.5LLX16.1	21.5L−16.1	44X18.00−20
A	1	2.1 (1.30)	1.6 (0.99)	1.8 (1.11)	1.9 (1.18)
	2	3.1 (1.92)	2.4 (1.49)	2.7 (1.67)	2.8 (1.73)
	3	4.5 (2.79)	3.5 (2.17)	4.0 (2.48)	4.1 (2.54)
	4	6.7 (4.16)	5.3 (3.29)	5.9 (3.66)	6.0 (3.72)

BL	1	8.0 (4.97)	6.3 (3.91)	7.1 (4.41)	7.2 (4.47)
	2	12.0 (7.45)	9.4 (5.84)	10.6 (6.58)	10.8 (6.71)
	3	17.6 (10.93)	13.9 (8.63)	15.5 (9.63)	15.9 (9.87)
	4	26.1 (16.21)	20.6 (12.80)	23.0 (14.29)	23.5 (14.60)

MODEL TN65 TN70 AND TN75 (Forward speed)

RANGE	GEAR	REAR TYRES km/h (mph)					
		TN65D TN70D TN75D		**TN65D TN70D TN75D TN65S TN70S TN75S**			
		22.5LLX16.1	44X18.00−20	16.9−30	16.9−28	14.9−28	13.6−28
A	1	1.8 (1.11)	1.8 (1.11)	2.4 (1.49)	2.3 (1.42)	2.1 (1.30)	2.1 (1.30)
	2	2.6 (1.61)	2.7 (1.67)	3.5 (2.17)	3.4 (2.11)	3.2 (1.98)	3.1 (1.92)
	3	4.0 (2.48)	4.0 (2.48)	5.0 (3.10)	5.0 (3.10)	4.8 (2.98)	4.6 (2.85)
	4	5.8 (3.60)	6.0 (3.72)	7.4 (4.59)	7.4 (4.59)	7.1 (4.41)	6.8 (4.22)
BL	1	6.9 (4.28)	7.1 (4.41)	9.0 (5.59)	9.0 (5.59)	8.6 (5.34)	8.2 (5.09)
	2	10.4 (6.46)	10. (6.58)	13.8 (8.57)	13.3 (8.26)	12.7 (7.89)	12.4 (7.70)
	3	15.2 (9.44)	15.6 (9.69)	20.3 (12.61)	19.6 (12.17)	18.7 (11.61)	17.9 (11.12)
	4	22.5 (13.98)	23.1 (14.35)	30.1 (18.70)	29.5 (18.33)	27.8 (17.27)	26.5 (16.46)

MODEL TN65 TN70 AND TN75 (Reverse speed)

RANGE	GEAR	REAR TYRES km/h (mph)					
		TN65D TN70D TN75D		**TN65D TN65S TN70D TN70S TN75D TN75S**			
		22.5LLX16.1	44X18.00−20	16.9−30	16.9−28	14.9−28	13.6−28
A	1	1.7 (1.05)	1.8 (1.11)	2.3 (1.42)	2.2 (1.36)	2.1 (1.30)	2.0 (1.24)
	2	2.6 (1.61)	2.6 (1.61)	3.4 (2.11)	3.3 (2.05)	3.2 (1.98)	3.0 (1.86)
	3	3.8 (2.36)	3.9 (2.42)	5.0 (3.10)	4.9 (3.04)	4.6 (2.85)	4.4 (2.73)
	4	5.6 (3.47)	5.7 (3.54)	7.5) (4.66)	7.2 (4.47)	6.9 (4.28)	6.5 (4.03)
BL	1	6.7 (4.16)	6.9 (4.28)	9.0 (5.59)	8.7 (5.40)	8.3 (5.15)	7.9 (4.90)
	2	10.0 (6.21)	10.3 (6.40)	12.9 (8.01)	12.9 (8.01)	12.3 (7.64)	11.8 (7.33)
	3	14.7 (9.13)	15.1 (9.38)	19.0 (11.8)	19.0 (11.8)	18.1 (11.24)	17.3 (10.74)
	4	21.8 (13.54)	22.3 (13.85)	28.1 (17.46)	28.1 (17.46)	26.9 (16.71)	25.6 (15.90)

TRANSMISSION WITH RANGE GEAR AND ELECTRO−HYDRAULIC SHUTTLE 18.64/24.85 mph (16F+16R) (Not available on all markets)

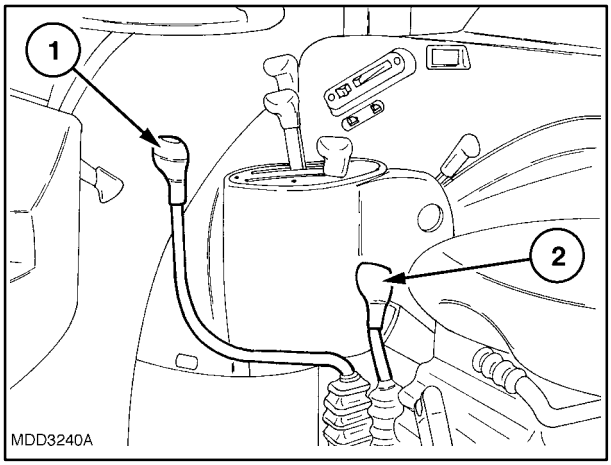

28

CAUTION: *With the engine running and only one gear lever in neutral, the tractor could be engaged and start moving if the lever is accidentally operated, which may lead to possible accidents. To avoid this hazard, move both levers to neutral, disengage the power take−off, lower any implements and apply the handbrake before leaving the tractor.*

NOTE: *In order to start the engine move the lever (**1**) fig. 30 to the neutral position. The clutch pedal must also be pressed fully down.*

The gear lever (**1**) fig. 28 selects four gear ratios (**1**, **2**, **3**, **4**).

The range lever (**2**) fig. 28 provides four ranges:

— **A** = slow;

— **BL** = medium slow;

— **BH** = medium fast;

— **C** = fast.

Separate use of the gear lever (**1**) fig. 28, the range lever (**2**) fig. 28 and the shuttle lever (**1**) fig. 30 allows **16** forward gears and **16** reverse gears to be selected.

NOTE: *The neutral position of the gear lever (**1**) fig. 30 and the range lever (**2**) fig. 28 is shown by the black dot fig. 29.*

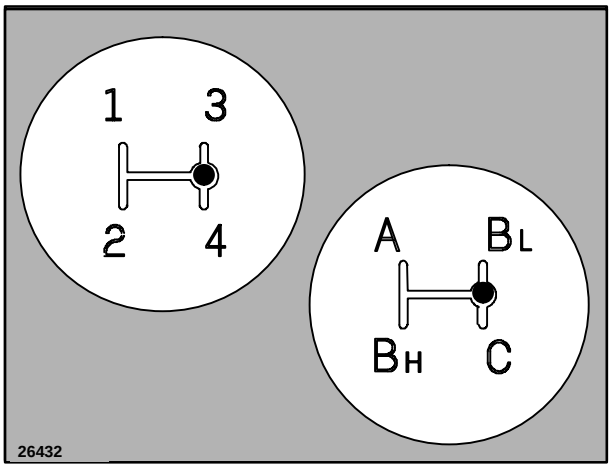

29

The tractor must always be stopped to change from one range to another. To change from one speed to another within the same range, disengage the clutch and move the gear lever (the tractor does not need to be stationary as the gears are synchro−engaged).

ELECTRO−HYDRAULIC (1) SHUTTLE CONTROL LEVER (Not available on all markets) − Fig. 30

The shuttle lever (**1**), located to the left of the steering wheel, is used to select forward or reverse drive when a gear ratio is engaged.

To select the drive direction, lift the lever and move it forwards for forward drive, or backward for reverse drive. Drive direction can be selected without pressing down the clutch pedal.

To change the drive direction without stopping the tractor, keep the lever raised and move it either forwards or backwards. Drive direction can be changed without pressing down the clutch pedal.

NOTE: *In order to start the engine, move the shuttle control lever* (**1**) fig. 36 *to the central neutral position* fig. 37*. It is also advised to fully press down the clutch pedal.*

CAUTION: *In order to use the Power shuttle lever (**1**) it is essential that the operator is correctly seated in the driving position.*

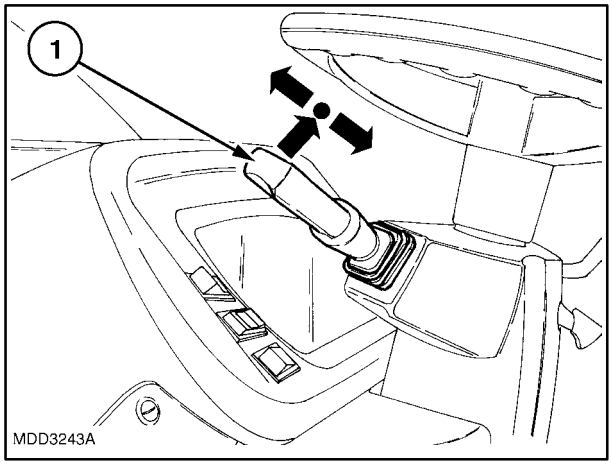

30

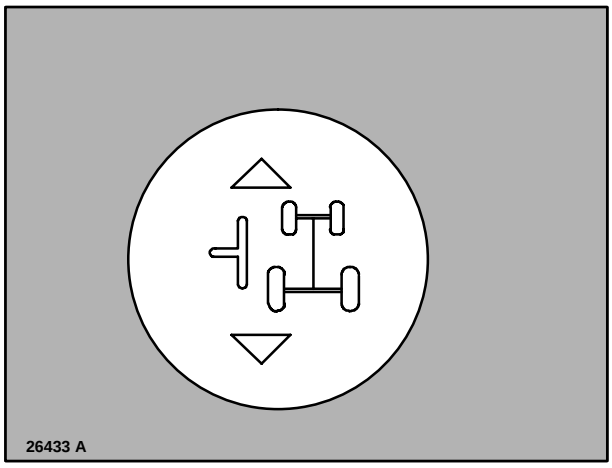

31

Transmission with Power Shuttle 18.64 mph (30 km/h) version (16F+16R)

MODEL TN55 S (Forward speed)

RANGE	GEAR	REAR TYRES km/h (mph)			
		16.9−28	14.9−28	13.6−28	16.9−24
A	1	0.6 (0.37)	0.6 (0.37)	0.6 (0.37)	0.6 (0.37)
	2	1.0 (0.62)	0.9 (0.55)	0.9 (0.55)	0.9 (0.55)
	3	1.4 (0.86)	1.3 (0.80)	1.3 (0.80)	1.3 (0.80)
	4	2.1 (1.30)	2.0 (1.24)	1.9 (1.18)	1.9 (1.18)
BL	1	2.7 (1.67)	2.6 (1.61)	2.4 (1.49)	2.5 (1.55)
	2	4.0 (2.48)	(3.8) (2.36)	3.6 (2.23)	3.7 (2.29)
	3	5.8 (3.60)	5.6 (3.47)	5.3 (3.29)	5.4 (3.35)
	4	8.7 (5.40)	8.3 (5.15)	7.9 (4.90)	8.0 (4.97)
BH	1	3.3 (2.05)	3.1 (1.92)	3.0 (1.86)	3.0 (1.8)
	2	4.9 (3.04)	4.7 (2.92)	4.4 (2.73)	4.5 (2.79)
	3	7.2 (4.47	6.8 (4.22)	6.5 (4.03)	6.6 (4.10)
	4	10.6 (6.58)	10.1 (6.27)	9.6 (5.96)	9.8 (6.08)
C	1	9.4 (5.84)	9.0 (5.59)	8.6 (5.34)	(8.7) (5.40)
	2	14.0 (8.69)	13.4) (8.32)	12.8 (7.95)	13.0 (8.07)
	3	20.6 (12.80)	19.7 (12.24)	18.8 (11.68)	19.1 (11.86)
	4	30.6 (19.01)	29.2 (18.14)	27.8 (17.27)	28.3 (17.58)

MODEL TN55D TN55S (Forward speed)

RANGE	GEAR	REAR TYRES km/h (mph)			
		TN55D TN55S		**TN55D**	
		14.9−24	22.5LLX16.1	21.5L−16.1	44X18.00−20
A	1	0.6 (0.37)	0.4 (0.24)	0.5 (0.31)	0.5 (0.31)
	2	0.8 (0.49)	0.7 (0.43)	0.7 (0.43)	0.8 (0.49)
	3	1.2 (0.74)	1.0 (0.62)	1.1 (0.68)	1.1 (0.68)
	4	1.8 (1.11)	1.4 (0.86)	1.6 (0.99)	1.6 (0.99)
BL	1	2.4) (1.49)	1.9 (1.18)	2.1 (1.30)	2.1 (1.30)
	2	3.5) (2.17)	2.8 (1.73)	3.1 (1.92)	3.2 (1.98)
	3	5.1 (3.16)	4.1 (2.54)	4.5 (2.79)	4.6 (2.85)
	4	7.6 (4.72)	6.0 (3.72)	6.7 (4.16)	6.9 (4.28)
BH	1	2.9 (1.80)	2.3 (1.42)	2.5 (1.55)	2.6 (1.61)
	2	4.3 (2.67)	3.4 (2.11)	3.8 (2.36)	3.9 (2.42)
	3	6.3 (3.91)	5.0 (3.10)	5.6 (3.47)	5.7 (3.54)
	4	9.3 (5.77)	7.4 (4.59)	8.2 (5.09)	8.4 (5.21)
C	1	8.3 (5.15)	6.5 (4.03)	7.3 (4.53)	7.5 (4.66)
	2	12.4 (7.70)	9.7 (6.02)	10.9 (6.77)	11.2 (6.95)
	3	18.2 (11.30)	14.3 (8.88)	16.0 (9.94)	16.4 (10.19)
	4	26.9 (16.71)	21.2 (13.17)	23.7 (14.72)	24.3 (15.09)

Transmission with Power Shuttle 18.64 mph (30 km/h) version (16F+16R)

MODEL TN55 S Reverse speed

RANGE	GEAR	REAR TYRES km/h (mph)			
		16.9−28	14.9−28	13.6−28	16.9−24
A	1	0.6 (0.37)	0.6 (0.37)	0.6 (0.37)	0.6 (0.37)
	2	0.9 (0.55)	0.9 (0.55)	0.8 (0.49)	0.9 (0.55)
	3	1.4 (0.86)	1.3 (0.80)	1.2 (0.74)	1.3 (0.80)
	4	2.0 (1.24)	1.9 (1.18)	1.8 (1.11)	1.9 (1.18)
BL	1	2.6 (1.61)	2.5 (1.55)	2.4 (1.49)	2.4 (1.49)
	2	3.9 (2.42)	3.7 (2.29)	3.5 (2.17)	3.6 (2.23)
	3	5.7 (3.54)	5.4 (3.35)	5.2 (3.23)	5.2 (3.23)
	4	8.4 (5.21)	8.0 (4.97)	7.6 (4.72)	7.7 (4.78)
BH	1	3.2 (1.98)	3.0 (1.86)	2.9 (1.80)	2.9 (1.80)
	2	4.7 (2.92)	4.5 (2.79)	4.3 (2.67)	4.4 (2.73)
	3	6.9 (4.28)	6.6 (4.10)	6.3 (3.91)	6.4 (3.97)
	4	10.3 (6.40)	9.8 (6.08)	9.3 (5.77)	9.5 (5.90)
C	1	9.1 (5.65)	8.7 (5.40)	8.3 (5.15)	8.4 (5.21)
	2	13.6 (8.45)	13.0 (8.07)	12.4 (7.70)	12.6 (7.82)
	3	20.0 (12.42)	19.1 (11.86)	18.2 (11.30)	18.5 (11.49)
	4	29.6 (18.39)	28.3 (17.58)	27.0 (16.77)	27.4 (17.02)

Reverse speed

RANGE	GEAR	REAR TYRES km/h (mph)			
		TN55D TN55S		**TN55D**	
		14.9−24	22.5LLX16.1	21.5L−16.1	44X18.00−20
A	1	0.6 (0.37)	0.4 (0.24)	0.5 (0.31)	0.5 (0.31)
	2	0.6 (0.49)	0.7 (0.43)	0.7 (0.43)	0.8 (0.49)
	3	1.2 (0.74)	1.0 (0.62)	1.1 (0.68)	1.1 (0.68)
	4	1.8 (1.11)	1.4 (0.86)	1.6 (0.99)	1.6 (0.99)
BL	1	2.4 (1.49)	1.9 (1.18)	2.1 (1.30)	2.1 (1.30)
	2	3.5 (2.17)	2.8 (1.73)	3.1 (1.92)	3.2 (1.98)
	3	5.1 (3.16)	4.1 (2.54)	4.5 (2.79)	4.6 (2.85)
	4	7.6 (4.72)	6.0 (3.72)	6.7 (4.16)	6.9 (4.28)
BH	1	2.9 (1.80)	2.3 (1.42)	2.5 (1.55)	2.6 (1.61)
	2	4.3 (2.67)	3.4 (2.11)	3.8 (2.36)	3.9 (2.42)
	3	6.3 (3.91)	5.0 (3.10)	5.6 (3.47)	5.7 (3.54)
	4	9.3 (5.77)	7.4 (4.59)	8.2 (5.09)	8.4 (5.21)
C	1	8.3 (5.15)	6.5 (4.03)	7.3 (4.53)	7.5 (4.66)
	2	12.4 (7.70)	9.7 (6.02)	10.9 (6.77)	11.2 (6.95)
	3	18.2 (11.30)	14.3 (8.88)	16.0 (9.94)	16.4 (10.19)
	4	26.9 (16.71)	21.2 (13.17)	23.7 (14.72)	24.3 (15.09)

(Forward speed)

RANGE	GEAR	REAR TYRES km/h (mph)					
		TN65D TN70D TN75D		**TN65D TN65S TN70D TN70S TN75D TN75S**			
		21.5LX16.1	44X18.00−20	16.9−30	16.9−28	14.9−28	13.6−28
A	1	0.5 (0.31)	0.5 (0.31)	0.6 (0.37)	0.6 (0.37)	0.6 (0.37)	0.6 (0.37)
	2	0.7 (0.43)	0.7 (0.43)	0.9 (0.55)	0.9 (0.55)	0.9 (0.55)	0.8 (0.49)
	3	1.0 (0.62)	1.1 (0.68)	1.4 (0.86)	1.3 (0.80)	1.3 (0.80)	1.2 (0.74)
	4	1.5 (0.93)	1.6 (0.99)	2.0 (1.24)	2.0 (1.24)	1.9 (1.18)	1.8 (1.11)
BL	1	2.0 (1.24)	2.0 (1.24)	2.6 (1.61)	2.5 (1.55)	2.4 (1.49)	2.3 (1.42)
	2	2.9 (1.80)	3.0 (1.86)	3.9) (2.42)	3.8 (2.36)	3.6 (2.23)	3.4 (2.11)
	3	4.3 (2.67)	4.4 (2.73)	5.8) (3.60)	5.6 (3.47)	5.3 (3.29)	5.1 (3.16)
	4	6.4 (3.97)	6.5 (4.03)	8.5) (5.28)	8.2 (5.09)	7.9 (4.90)	7.5 (4.66)
BH	1	2.4 (1.49)	2.5 (1.55)	3.2) (1.98)	3.1 (1.92)	3.0 (1.86)	2.8 (1.73)
	2	2.23 (3.6)	3.7 (2.29)	4.8) (2.98)	4.6 (2.85)	4.4 (2.73)	4.2 (2.60)
	3	5.3 (3.29)	5.4 (3.35)	7.0) (4.34)	6.8 (4.22)	6.5 (4.03)	6.2 (3.85)
	4	7.8 (4.84)	8.0 (4.97)	10.4) (6.46	10.1 (6.27)	9.6 (5.96)	9.2 (5.71)
C	1	6.9 (4.28)	7.1 (4.41)	9.3) (5.77)	9.0 (5.71)	8.6 (5.34)	8.1 (5.03)
	2	10.4 (6.46)	10.6 (6.58)	3.8) (8.57	13.3 (8.26)	12.7 (7.89)	12.1 (7.51)
	3	15.2 (9.44)	15.6 (9.69)	20.3 (12.61)	19.6 (12.17)	18.7 (11.61)	17.9 (11.12)
	4	22.5 (13.98)	23.1 (14.35)	30.1) (18.70)	29.1 (18.08)	27.8 (17.27)	26.5 (16.46)

(Forward speed)

RANGE	GEAR	REAR TYRES km/h (mph)			
		TN65D TN65S TN70D TN70S TN75D TN75S			
		14.9−24	18.4−16	16.9−24	22.5LLX16
A	1	0.5 (0.31)	0.5 (0.31)	0.5 (0.31)	0.4 (0.24)
	2	0.8 (0.49)	0.7 (0.43)	0.8 (0.49)	0.6 (0.37)
	3	1.2 (0.74)	1.1 (0.68)	1.2 (0.74)	0.9 (0.55)
	4	1.7 (1.05)	1.6 (0.99)	1.8 (1.11)	1.4 (0.86)
BL	1	2.2 (1.36)	2.1 (1.30)	2.3 (1.42)	1.8 (1.11)
	2	3.3 (2.05)	3.1 (1.92)	3.5 (2.17)	2.6 (1.61)
	3	4.9 (3.04)	4.5 (2.79)	5.1 (3.16)	3.9 (2.42)
	4	7.2 (4.47)	6.7 (4.16)	7.6 (4.72)	5.7 (3.54)
BH	1	2.7 (1.67)	2.5 (1.55)	2.9 (1.80)	2.2 (1.36)
	2	4.1 (2.54)	3.8 (2.36)	4.3 (2.67)	3.2 (1.98)
	3	6.0 (3.72)	5.5 (3.41)	6.3 (3.91)	4.7 (2.92)
	4	8.9 (5.53)	8.2 (5.09)	9.3 (5.77)	7.0 (4.34)
C	1	7.9 (4.90)	7.3 (4.53)	8.3 (5.15)	6.2 (3.85)
	2	11.8 (7.33)	10.9 (6.77)	12.3 (7.64)	9.3 (5.77)
	3	17.3 (10.74)	16.0 (9.94)	18.1 (11.24)	13.6 (8.45)
	4	25.6 (15.90)	23.6 (14.66)	26.9 (16.71)	20.2 (12.55)

(Reverse speed)

RANGE	GEAR	REAR TYRES km/h (mph)					
		TN65D TN70D TN75D		**TN65D TN65S TN70D TN70S TN75D TN75S**			
		21.5LX16.1	44X18.00−20	16.9−30	16.9−28	14.9−28	13.6−28
A	1	0.5 (0.31)	0.5 (0.31)	0.6 (0.37)	0.6 (0.37)	0.6 (0.37)	0.6 (0.37)
	2	0.7 (0.43)	0.7 (0.43)	0.9 (0.55)	0.9 (0.55)	0.8 (0.49)	0.8 (0.49)
	3	1.0 (0.62)	1.0 (0.62)	1.3 (0.80)	1.3 (0.80)	1.2 (0.74)	1.2 (0.74)
	4	1.5 (0.93)	1.5 (0.93)	2.0 (1.24)	1.9 (1.18)	1.8 (1.11)	1.7 (1.05)
BL	1	1.9 (1.18)	2.0 (1.24)	2.5 (1.55)	2.5 (1.55)	2.3 (1.42)	2.2 (1.36)
	2	2.8 (1.73)	2.9 (1.80)	3.8 (2.36)	3.7 (2.29)	3.6 (2.23)	3.3 (2.05)
	3	4.2 (2.60)	4.3 (2.67)	5.6 (3.47)	5.4 (3.35)	5.1 (3.16)	4.9 (3.04)
	4	6.2 (3.85)	6.3 (3.91)	8.3 (5.15)	8.0 (4.97)	7.6 (4.72)	7.3 (4.53)
BH	1	2.3 (1.42)	2.4 (1.49)	3.1 (1.92)	3.0 (1.86)	2.9 (1.80)	2.7 (1.67)
	2	3.5 (2.17)	3.4 (2.11)	4.6 (2.85)	4.5 (2.79)	4.3 (2.67)	4.1 (2.54)
	3	5.1 (3.16)	5.2 (3.23)	6.8 (4.22)	6.6 (4.10)	6.3 (3.91)	6.0 (3.72)
	4	7.6 (4.72)	7.7 (4.78)	10.1 (6.27)	9.8 (6.08)	9.3 (5.77)	8.9 (5.53)
C	1	6.7 (4.16)	6.9 (4.28)	9.0 (5.71)	8.7 (5.40)	8.3 (5.15)	7.9 (4.90)
	2	10.0 (6.21)	10.3 (6.40)	13.4 (8.32)	12.9 (8.01)	12.3 (7.64)	11.8 (7.33)
	3	14.7 (9.13)	15.1 (9.38)	19.0 (11.80)	19.0 (11.80)	18.1 (11.24)	17.3 (10.74)
	4	21.8 (13.54)	22.3 (13.85)	28.1 (17.46)	28.1 (17.46)	26.9 (16.71)	25.6 (15.90)

(Reverse speed)

RANGE	GEAR	REAR TYRES km/h (mph)			
		TN65D TN65S TN70D TN70S TN75D TN75S			
		14.9−24	18.4−16	16.9−24	22.5LLX16
A	1	0.5 (0.31)	0.5 (0.31)	0.5 (0.31)	0.4 (0.24)
	2	0.8 (0.49)	0.7 (0.43)	0.8 (0.40)	0.6 (0.37)
	3	1.1 (1.1)	1.0 (0.62)	1.2 (0.74)	0.9 (0.55)
	4	1.7 (1.05)	1.5 (0.93)	1.8 (1.11)	1.3 (0.80)
BL	1	2.2 (1.36)	2.0 (1.24)	2.3 (1.42)	1.7 (1.05)
	2	3.2 (11.98)	3.0 (1.86)	3.4 (2.11)	2.5 (1.55)
	3	4.7 (2.92)	4.4 (2.73)	5.0 (3.10)	3.7 (2.29)
	4	7.0 (4.34)	6.5 (4.03)	7.4 (4.59)	5.5 (3.41)
BH	1	2.6 (1.61)	2.4 (1.49)	2.8 (1.73)	2.1 (1.30)
	2	3.9 (2.42)	3.6 (2.23)	4.1 (2.54)	3.1 (1.92)
	3	5.8 (3.60)	5.4 (3.35)	6.1 (3.79)	4.6 (2.85)
	4	8.6 (5.34)	7.9 (4.90)	9.0 (5.71)	6.8 (4.22)
C	1	7.6 (4.72)	7.1 (4.41)	8.0 (4.97)	6.0 (3.72)
	2	11.4 (7.08)	10.5 (6.52)	12.0 (7.45)	9.0 (5.71)
	3	16.7 (10.37)	15.5 (9.63)	17.6 (10.93)	13.2 (8.20)
	4	24.8 (15.40)	22.9 (14.2)	26.0 (16.15)	19.5 (12.11)

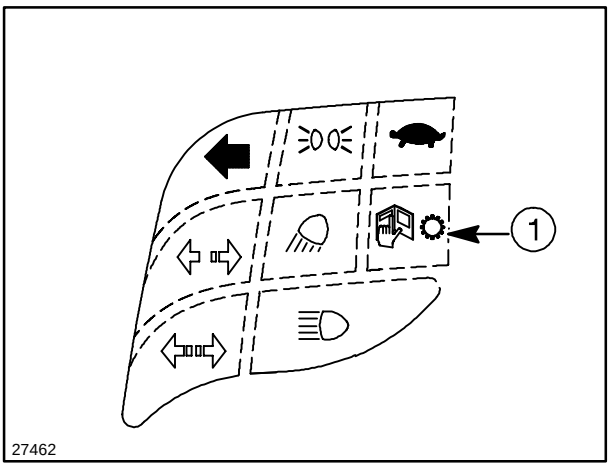

32

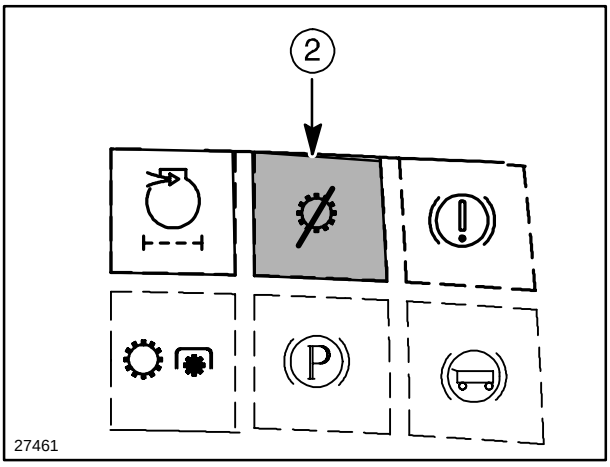

33

TRANSMISSION DISABLED INDICATION (8+8 and 16+16 transmissions)

The transmission can be disabled in three different ways:

1. Initial test;
2. Temporary transmission disable;
3. Permanent transmission disable.

Initial test

During the tractor starting phase, the control unit may detect conditions that could prevent operation, e.g.:

- excessive oil viscosity at low temperatures;
- hydraulic or mechanical problems.

In the event of low oil temperature due to climatic conditions, the control unit automatic test may continue for several seconds, causing the indicator (**1**) to illuminate.

In these conditions, wait until the control unit automatic test terminates and allow the engine to idle until the oil reaches working temperature. If conditions are acceptable, the indicator (**1**) will switch off.

Temporarily disabled transmission

If the control unit detects an incorrect control sequence performed by the operator or a system fault, the transmission will be disabled, causing indicator (**1**) to flash, and indicator (**2**) may also flash in the presence of a fault code (fault codes can be interpreted by following the instructions on page 2−54).

The transmission can be re−enabled by moving the shuttle lever to the neutral position and/or pressing the clutch pedal fully down.

This will stop indicator (**1**) from flashing, whereas indicator (**2**) may remain illuminated.

Permanently disabled transmission

If the control unit detects a critical fault in the transmission system, indicator (**1**) will remain illuminated, whereas indicator (**2**) will flash to signal a system fault.
In this case, the tractor cannot be used.

CAUTION: *If fault codes are* displayed*, contact NEW HOLLAND specialised personnel immediately.*

TRANSMISSION WITH RANGE GEAR AND MECHANICAL SHUTTLE 18.64/24.85 mph (30/40 km/h) (16F+16R)

CAUTION: *With the engine running and only one gear lever in neutral, the tractor could be engaged and start moving if the lever is accidentally operated, which may lead to possible accidents. To avoid this hazard, move both levers to neutral, disengage the power take−off, lower any implements and apply the handbrake before leaving the tractor.*

NOTE: *In order to start the engine move the lever (**1**) fig. 36 to the neutral position. The clutch pedal must also be pressed fully down.*

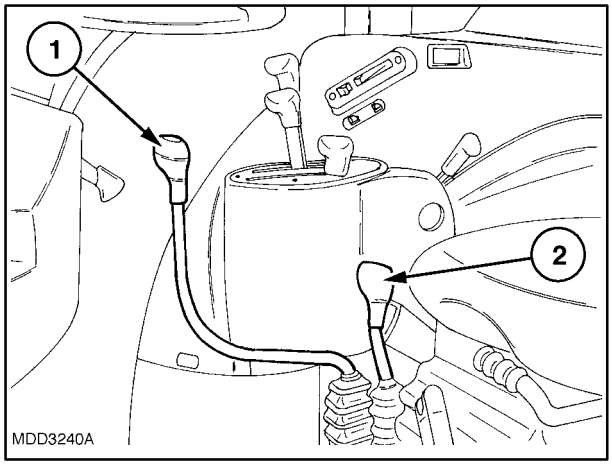

34

The gear lever (**1**) fig. 34 selects four gear ratios (**1**, **2**, **3**, **4**).

The range lever (**2**) fig. 34 provides four ranges:

— **A** = slow;

— **BL** = medium slow;

— **BH** = medium fast;

— **C** = fast.

Separate use of the gear lever (**1**) fig. 34, the range lever (**2**) fig. 34 and the mechanical shuttle lever (**1**) fig. 36 allows **16** forward gears and **16** reverse gears to be selected.

NOTE: *The neutral position of the gear lever (**1**) fig. 35 and the range lever (**2**) fig. 35 is shown by the black dot.*

The tractor must always be stopped to change from one range to another. To change from one speed to another within the same range, disengage the clutch and move the gear lever (the tractor does not need to be stationary as the gears are synchro−engaged).

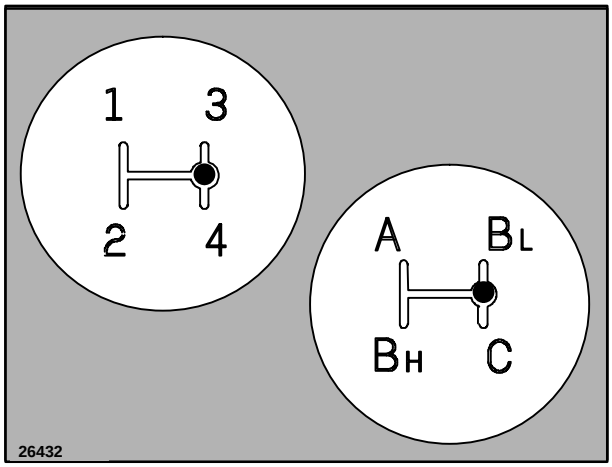

35

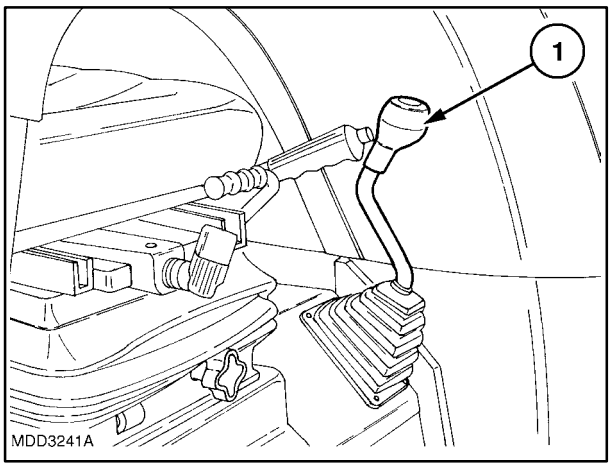

36

Mechanical shuttle control lever − Fig. 36 and 37

The lever (**1**) fig. 36, located to the left of the driver's seat, is used to select forward or reverse when a gear ratio is engaged.

To select the direction of travel, move lever (**1**) fig. 36 forwards for forward movement or backwards for reverse, as shown in fig. 37.

To change drive direction whilst in movement, slow down the tractor (almost to a standstill).

NOTE: *In order to start the engine, move the shuttle control lever* (**1**) fig. 36 *to the central neutral position* fig. 37*. It is also advised to fully press down the clutch pedal.*

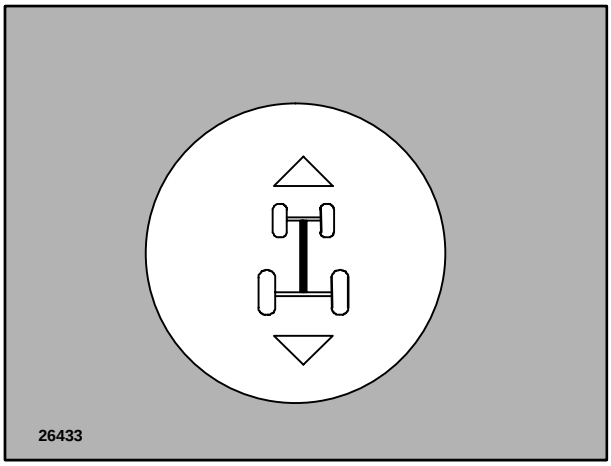

37

CAUTION: *In order to use the Power shuttle lever (**1**) it is essential that the operator is correctly seated in the driving position.*

MODEL TN55 − SPEED AT MAXIMUM POWER
Transmission with mechanical shuttle 18.64 mph (30 km/h) version (16F+16R)
Forward speed

RANGE	GEAR	REAR TYRES km/h (mph)		
		22.5LLX16.1	13.6−28 **(1)**	14.9−28 **(2)**
A	1	0.4 (0.24)	0.6 (0.37)	0.6 (0.37)
	2	0.8 (0.49)	0.9 (0.55)	0.9 (0.55)
	3	0.9 (0.55)	1.3 (0.80)	1.3 (0.80)
	4	1.4 (0.86)	1.9 (1.18)	2.0 (1.24)
BL	1	1.8 (1.11)	2.4 (1.49)	2.5 (1.55)
	2	2.6 (1.61)	3.5 (2.17)	3.8 (2.36)
	3	3.9 (2.42)	5.3 (3.29)	5.6 (3.47)
	4	5.7 (3.54)	7.8 (4.84)	8.3 (5.15)
BH	1	2.2 (1.36)	3.0 (1.86)	3.1 (1.92)
	2	3.2 (1.98)	4.4 (2.73)	4.6 (2.85)
	3	4.7 (2.92)	6.5 (4.03)	6.8 (4.22)
	4	7.0 (4.34)	9.6 (5.96)	10.1 (6.27)
C	1	8.3 (5.15)	8.6 (5.34)	9.0 (5.71)
	2	9.3 (5.77)	12.8 (7.95)	13.4 (8.32)
	3	13.7 (8.5)	18.8 (11.68)	19.7 (12.24)
	4	20.3 (12.61)	27.8 (17.27)	29.2 (18.14)

NOTE: *The speeds can also be applied to the following tyres:* ***(1)*** *380/70−28* ***(2)*** *420/70−28, 480/65−28, 12.4−32.*

MODEL TN55 − SPEED AT MAXIMUM POWER
Transmission with mechanical shuttle 18.64 mph (30 km/h) version (16F+16R)

Reverse speed

RANGE	GEAR	REAR TYRES km/h (mph)		
		22.5LLX16.1	13.6−28 **(1)**	14.9−28 **(2)**
A	1	0.4 (0.24)	0.6 (0.37)	0.6 (0.37)
	2	0.6 (0.37)	0.8 (0.49)	0.9 (0.55)
	3	0.9 (0.55)	1.2 (0.74)	1.3 (0.80)
	4	1.3 (0.80)	1.8 (1.11)	1.9 (1.18)
BL	1	1.7 (1.05)	2.4 (1.49)	2.5 (1.55)
	2	2.6 (1.61)	3.5 (2.17)	3.7 (2.29)
	3	3.8 (2.36)	5.2 (3.23)	5.4 (3.35)
	4	5.6 (3.47)	7.6 (4.72)	8.0 (4.97)
BH	1	2.1 (1.30)	2.9 (1.80)	3.0 (1.86)
	2	3.1 (1.92)	4.3 (2.67)	4.5 (2.79)
	3	4.6 (2.85)	6.3 (3.91)	6.6 (4.10)
	4	5.8 (3.60)	9.3 (5.77)	9.8 (6.08)
C	1	6.1 (3.79)	8.3 (5.15)	8.7 (5.40)
	2	9.0 (5.71)	12.4 (7.70)	13.0 (8.07)
	3	13.3 (8.26)	18.2 (11.30)	19.1 (11.86)
	4	19.6 (12.17)	27.0 (16.77)	28.3 (17.58)

NOTE: *The speeds can also be applied to the following tyres:* ***(1)*** *380/70−28* ***(2)*** *420/70−28, 480/65−28, 12.4−32.*

MODELS TN65 TN70 AND TN75 − SPEED AT MAXIMUM POWER
Transmission with mechanical shuttle 18.64 mph (30 km/h) version (16F+16R)

Forward speed

RANGE	GEAR	REAR TYRES km/h (mph)							
		22.5LLX16.1	13.6−28 **(1)**	14.9−28 (2)	9.5−36	14.9−30 **(3)**	16.9−28 **(4)**	12.4−36	16.9−30 **(5)**
A	1	0.24 (0.4)	0.5 (0.31)	0.6 (0.37)	0.6 (0.37)	0.6 (0.37)	0.6 (0.37)	0.6 (0.37)	0.6 (0.37)
	2	0.37 (0.6)	0.8 (0.49)	0.9 (0.55)	0.9 (0.55)	0.9 (0.55)	0.9 (0.55)	0.9 (0.55)	0.9 (0.55)
	3	0.55 (0.9)	1.2 (0.74)	1.3 (0.80)	1.3 (0.80)	1.3 (0.80)	1.3 (0.80)	1.4 (0.86)	1.4 (0.86)
	4	0.80 (1.3)	1.8 (1.11)	1.9 (1.18)	1.9 (1.18)	1.9 (1.18)	2.0 (1.24)	2.0 (1.24)	2.2 (1.36)
BL	1	1.05 (1.7)	2.3 (1.42)	2.4 (1.49)	2.4 (1.49)	2.5 (1.55)	2.5 (1.55)	2.6 (1.61)	2.6 (1.61)
	2	1.55 (2.5)	3.4 (2.11)	3.6 (2.23)	3.6 (2.23)	3.7 (2.29)	3.7 (2.29)	3.9 (2.42)	3.9 (2.42)
	3	2.42 (3.9)	5.1 (3.16)	5.3 (3.29)	5.3 (3.29)	5.5 (3.41)	5.5 (3.41)	5.7 (3.54)	5.6 (3.47)
	4	3.41 (5.5)	7.5 (4.66)	7.9 (4.90)	7.9 (4.90)	8.2 (5.09)	8.2 (5.09)	8.5 (5.28)	8.5 (5.28)
BH	1	1.30 (2.1)	2.8 (1.73)	3.0 (1.86)	3.0 (1.86)	3.1 (1.92)	3.1 (1.92)	3.2 (1.98)	3.2 (1.98)
	2	1.92 (3.1)	4.2 (2.60)	4.4 (2.73)	4.4 (2.73)	4.6 (2.85)	4.6 (2.85)	4.8 (2.98)	4.8 (2.98)
	3	2.79 (4.5)	6.2 (3.85)	6.5 (4.03)	6.5 (4.03)	6.7 (4.16)	6.8 (4.22)	7.0 (4.34)	7.0 (4.34)
	4	3.47 (5.6)	9.2 (5.71)	9.6 (5.96)	9.7 (6.02)	10.0 (6.21)	10.1 (6.27)	10.4 (6.46)	10.4 (6.46)
C	1	3.66 (5.9)	8.1 (5.03)	8.5 (5.28)	8.6 (5.34)	8.9 (5.53)	8.9 (5.53)	9.2 (5.71)	9.3 (5.77)
	2	5.53 (8.9)	(12.1 (7.51)	12.7 (7.89)	12.8 (7.95)	13.2 (8.20)	13.3 (8.26)	13.4 (8.32)	13.8 (8.7)
	3	8.07 (13.0)	17.9 (11.12)	18.7 (11.61)	18.9 (11.74)	19.5 (12.11)	19.6 (12.1)	12.55 (20.2)	20.3 (12.61)
	4	11.99 (19.3)	26.4 (16.40)	27.7 (17.21)	28.0 (17.39)	28.8 (17.89)	29.0 (18.01)	29.9 (18.57)	30.1 (18.70)

NOTE: *The speeds can also be applied to the following tyres:* ***(1)*** *380/70−28* ***(2)*** *420/70−28, 480/65−28, 12.4−32* ***(3)*** *420/70−30* ***(4)*** *540/65−28* ***(5)*** *480/70− 30.*

MODELS TN65 TN70 AND TN75 − SPEED AT MAXIMUM POWER

Transmission with mechanical shuttle 18.64 mph (30 km/h) version (16F+16R)

Reverse speed

RANGE	GEAR	REAR TYRES km/h (mph)							
		22.5LLX16.1	13.6−28 **(1)**	14.9−28 **(2)**	9.5−36	14.9−30 **(3)**	16.9−28 **(4)**	12.4−36	16.9−30 **(5)**
A	1	0.4 (0.24)	0.5 (0.31)	0.6 (0.37)	0.6 (0.37)	0.6 (0.37)	0.6 (0.37)	0.6 (0.37)	0.6 (0.37)
	2	0.6 (0.37)	0.49 (0.8)	0.8 (0.49)	0.8 (0.49)	0.9 (0.55)	0.9 (0.55)	0.9 (0.55)	0.9 (0.55)
	3	0.8 (0.49)	1.2 (0.74)	1.2 (0.74)	1.2 (0.74)	1.3 (0.80)	1.3 (0.80)	1.3 (0.80)	1.3 (0.80)
	4	1.3 (0.80)	1.7 (1.05)	1.8 (1.11)	1.8 (1.11)	1.9 (1.18)	1.9 (1.18)	2.0 (1.24)	2.0 (1.24)
BL	1	1.6 (0.99)	2.2 (1.36)	2.3 (1.42)	2.4 (1.49)	2.4 (1.49)	2.4 (1.49)	2.5 (1.55)	2.5 (1.55)
	2	2.4 (1.49)	3.3 (2.05)	3.5 (2.17)	3.5 (2.17)	3.6 (2.23)	3.7 (2.29)	3.8 (2.36)	3.8 (2.36)
	3	3.6 (2.23)	4.9 (3.04)	5.1 (3.16)	5.2 (3.23)	5.3 (3.29)	5.4 (3.35)	5.5 (3.41)	5.6 (3.47)
	4	5.3 (3.29)	7.2 (4.47)	7.6 (4.72)	7.7 (4.78)	7.9 (4.90)	8.0 (4.97)	8.2 (5.09)	8.3 (5.15)
BH	1	2.0 (1.24)	2.7 (1.67)	2.9 (1.80)	2.9 (1.80)	3.0 (1.86)	3.0 (1.86)	3.1 (1.92)	3.1 (1.92)
	2	3.0 (1.86)	4.1 (2.54)	4.3 (2.67)	4.3 (2.67)	4.4 (2.73)	4.5 (2.79)	4.6 (2.85)	4.6 (2.85)
	3	4.4 (2.73)	6.0 (3.72)	6.3 (3.91)	6.3 (3.91)	6.5 (4.03)	6.6 (4.10)	6.8 (4.22)	6.8 (4.22)
	4	5.5 (3.41)	8.9 (5.53)	9.3 (5.77)	9.4 (5.84)	9.8 (6.08)	9.7 (6.02)	10.1 (6.27)	10.1 (6.27)
C	1	5.8 (3.60)	7.9 (4.90)	8.3 (5.15)	8.3 (5.15)	8.6 (5.34)	8.6 (5.34)	8.9 (5.53)	8.9 (5.53)
	2	8.6 (5.34)	11.8 (7.33)	12.3 (7.64)	12.4 (7.70)	12.8 (7.95)	12.9 (8.01)	13.3 (8.26)	13.4 (8.32)
	3	12.6 (7.82)	17.3 (10.74)	18.1 (11.24)	18.3 (11.37)	18.9 (11.74)	19.0 (11.80)	19.6 (12.17)	19.7 (12.24)
	4	18.6 (11.55)	25.8 (16.03)	26.9 (16.71)	27.9 (17.33)	27.9 (17.33)	28.1 (17.46)	29.0 (18.01)	29.2 (18.14)

NOTE: *The speeds can also be applied to the following tyres:* ***(1)*** *380/70−28* ***(2)*** *420/70−28, 480/65−28, 12.4−32* ***(3)*** *420/70−30* ***(4)*** *540/65−28, 480/70−28* ***(5)*** *480/70−30.*

TRANSMISSION WITH CREEPER AND MECHANICAL SHUTTLE 18.64/24.85 mph (30/40 km/h) (28F+16R)

CAUTION: *With the engine running and only one gear lever in neutral, the tractor could be engaged and start moving if the lever is accidentally operated, which may lead to possible accidents. To avoid this hazard, move both levers (**1** and **2**) fig. 34 to neutral, disengage the power take−off, lower any implements and apply the handbrake before leaving the tractor.*

NOTE: *In order to start the engine, move the shuttle control lever* (**1**) *fig.* 38 *to the central neutral position fig.* 40. *It is also advised to fully press down the clutch pedal.*

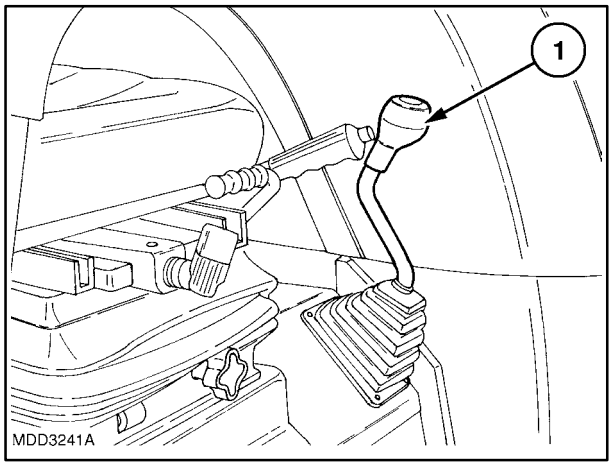

38

The gear, range gear and mechanical shuttle levers operate in the same way as the 16+16 transmission described on page 2−35.

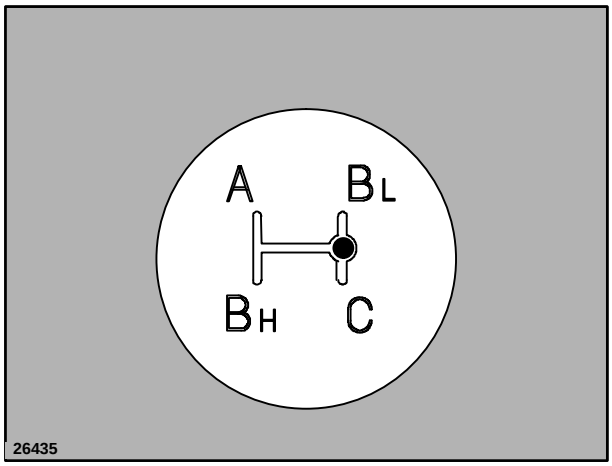

39

By means of the lever (**1**) fig. 38 the creeper unit can be selected, with the use of 12 reduced gears in forward drive only.

The unit must only be engaged when the tractor is stationary.

The creeper unit only operates with ranges **A** − **BL** and **BH** fig. 39.

NOTE: *Do not use the creeper unit together with fast range **C**. In the event of accidental engagement of the creeper unit, the range gear lever will move to the neutral position. Vice versa, if fast range **C**, is selected, the creeper unit will be disengaged.*

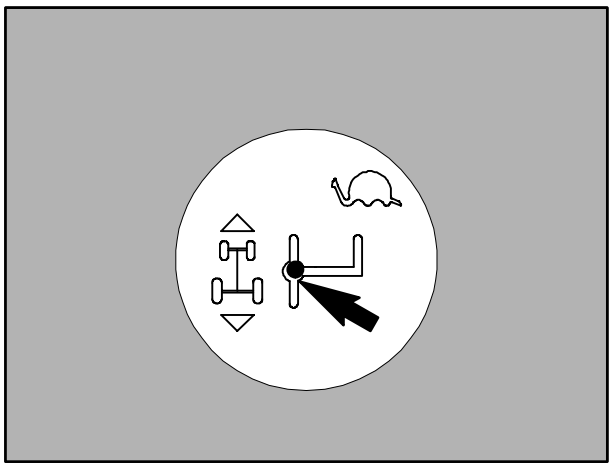

40

CREEPER UNIT CONTROL − Fig. 40

In order to select creeper unit operation, move the mechanical shuttle lever (**1**) fig. 38 from the central neutral position fig 40 forward and to the right, as shown in fig. 40.
The creeper unit provides **28** forward gears and **16** reverse gears.

SPEED AT MAXIMUM POWER

Transmission with creeper unit 18.64 mph (30 km/h) version (28F+16R)
MODEL TN55 − Speed in forward gear with creeper unit engaged.

RANGE	GEAR	REAR TYRES km/h (mph)		
		22.5LLX16.1	13.6−28 **(1)**	14.9−28 **(2)**
A	1	0.1 (0.06)	0.15 (0.09)	0.15 (0.09)
	2	0.18 (0.10)	0.22 (0.13)	0.23 (0.14)
	3	0.23 (0.14)	0.3 (0.18)	0.3 (0.18)
	4	0.4 (0.24)	0.5 (0.31)	0.5 (0.31)
BL	1	0.5 (0.31)	0.6 (0.37)	0.7 (0.43)
	2	0.6 (0.37)	0.9 (0.55)	0.9 (0.55)
	3	1.0 (0.62)	1.4 (0.86)	1.4 (0.86)
	4	1.5 (0.93)	2.0 (1.24)	2.1 (1.30)
BH	1	0.6 (0.37)	0.8 (0.49)	0.6 (0.37)
	2	0.8 (0.49)	1.1 (0.68)	1.2 (0.74)
	3	1.2 (0.74)	1.7 (1.05)	1.8 (1.11)
	4	1.8 (1.11)	2.5 (1.55)	2.6 (1.61)

NOTE: *The speeds can also be applied to the following tyres:* ***(1)*** *380/70−28* ***(2)*** *420/70−28, 480/65−28, 12.4−32.*

NOTE: *The speeds at maximum power in forward gear with creeper unit disengaged and in reverse gear are the same as for the 16 + 16 transmission shown on page 2−37.*

SPEED AT MAXIMUM POWER

Transmission with creeper unit 18.64 mph (30 km/h) version (28F+16R)

MODELS TN65, TN70, TN75 − Speed in forward gear with creeper unit engaged

RANGE	GEAR	REAR TYRES mph (km/h)							
		22.5LLX16.1	13.6−28 **(1)**	14.9−28 **(2)**	9.5−36	14.9−30 **(3)**	16.9−28 **(4)**	12.4−36	16.9−30 **(5)**
A	1	0.1 (0.06)	0.1 (0.06)	0.1 (0.06)	0.17 (0.10)	0.17 (0.10)	0.17 (0.10)	0.17 (0.10)	0.17 (0.10)
	2	0.15 (0.09)	0.2 (0.12)	0.2 (0.12)	0.2 (0.12)	0.2 (0.12)	0.2 (0.12)	0.2 (0.12)	0.2 (0.12)
	3	0.22 (0.13)	0.3 (0.18)	0.3 (0.18)	0.3 (0.18)	0.3 (0.18)	0.3 (0.18)	0.4 (0.24)	0.4 (0.24)
	4	0.3 (0.18)	0.4 (0.2)	0.5 (0.31)	0.5 (0.31)	0.5 (0.31)	0.5 (0.31)	0.5 (0.31)	0.5 (0.31)
BL	1	0.4 (0.24)	0.6 (0.37)	0.6 (0.37)	0.6 (0.37)	0.6 (0.37)	0.7 (0.43)	0.9 (0.55)	0.9 (0.55)
	2	0.5 (0.31)	0.9 (0.55)	0.9 (0.55)	0.9 (0.55)	1.0 (0.62)	1.0 (0.62)	1.0 (0.62)	1.0 (0.62)
	3	1.0 (0.62)	1.4 (0.86)	1.4 (0.86)	1.4 (0.86)	1.4 (0.86)	1.4 (0.86)	1.5 (0.93)	1.5 (0.93)
	4	1.4 (0.86)	1.9 (1.18)	2.0 (1.24)	2.1 (1.30)	2.1 (1.30)	2.1 (1.30)	2.2 (1.36)	2.2 (1.36)
BH	1	0.5 (0.31)	0.7 (0.43)	0.7 (0.43)	0.7 (0.43)	0.8 (0.49)	0.8 (0.49)	0.8 (0.49)	0.8 (0.49)
	2	0.8 (0.49)	1.1 (0.68)	1.1 (0.68)	1.2 (0.74)	1.2 (0.74)	1.2 (0.74)	1.2 (0.74)	1.2 (0.74)
	3	1.2 (0.74)	1.6 (0.99)	1.7 (1.05)	1.7 (1.05)	1.8 (1.11)	1.8 (1.11)	1.8 (1.11)	1.8 (1.11)
	4	1.7 (1.05)	2.4 (1.49)	2.5 (1.55)	2.51 (1.55)	2.6 (1.61)	2.6 (1.61)	2.7 (1.67)	2.7 (1.67)

NOTE: *The speeds at maximum power in forward gear with creeper unit disengaged and in reverse gear are the same as for the 16 + 16 transmission shown on page 2−40.*

NOTE: *The speeds can also be applied to the following tyres:* ***(1)*** *380/70−28* ***(2)*** *420/70−28, 480/65−28, 12.4−32* ***(3)*** *420/70−30* ***(4)*** *540/65−28, 480/70−28* ***(5)*** *480/70− 30.*

TRANSMISSION WITH RANGE GEAR, MECHANICAL SHUTTLE AND SPLITTER 18.64/24.85 mph (30/40 km/h) (32F+16R)

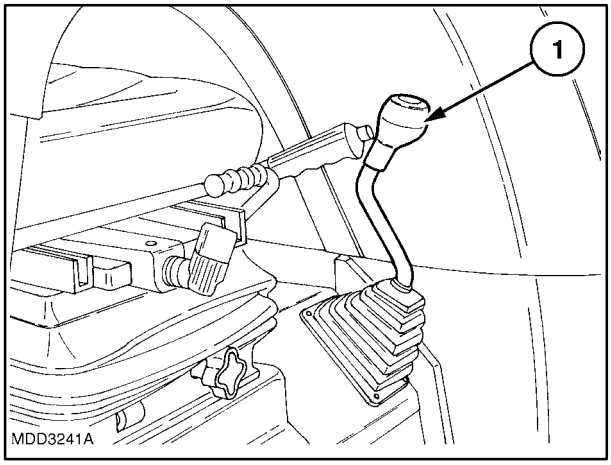

41

CAUTION: *With the engine running and only one gear lever in neutral, the tractor could be engaged and start moving if the lever is accidentally operated, which may lead to possible accidents. To avoid this hazard, move both levers (**1** and **2**) fig. 34 to neutral, lower any implements and apply the hand-brake before leaving the tractor.*

NOTE: *In order to start the engine, move the lever (**1**) fig. 41 to the central neutral position fig. 42. It is also advised to fully press down the clutch pedal.*

The gear, range gear and mechanical shuttle levers operate in the same way as the 16+16 transmission described on page 2−35.

By means of the lever (**1**) fig. 41 the splitter unit can be selected, enabling the forward gears to be doubled mechanically, with a reduction in speed of 20%.

The creeper unit provides **32** forward gears and **16** reverse gears.The tractor does not need to be stationary in order to select this operation, as the gears are synchro−engaged.

SPLITTER CONTROL − Fig. 42

In order to select splitter unit operation, move the mechanical shuttle lever (**1**) fig. 41 from the central neutral position fig. 42 backwards and to the right (tortoise symbol), as shown in fig. 42.

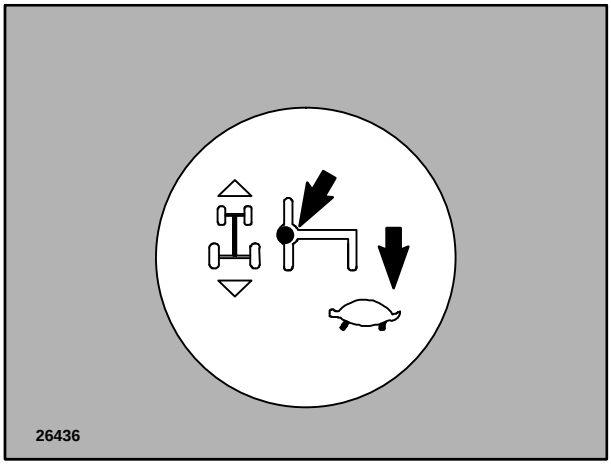

42

NOTE: *The speeds at maximum power in forward gear with the splitter disengaged and in reverse gear are the same as for the 16 + 16 transmission shown on page 2−37, 2−40.*

SPEED AT MAXIMUM POWER
Transmission with shuttle, range gear and splitter (32F+16R)
MODEL TN55 − Forward speed 18.64 mph (30 km/h)

RANGE	GEAR	REAR TYRES km/h (mph)		
		22.5LLX16.1	13.6−28 **(1)**	14.9−28 **(2)**
A	1	0.4 (0.24)	0.5 (0.31)	0.5 (0.31)
	2	0.5 (0.31)	0.7 (0.43)	0.8 (0.49)
	3	0.8 (0.49)	1.1 (0.68)	1.1 (0.68)
	4	1.1 (0.68)	1.6 (0.99)	1.6 (0.99)
BL	1	1.5 (0.93)	2.0 (1.24)	2.1 (1.30)
	2	2.2 (1.36)	3.0 (1.86)	3.2 (1.98)
	3	3.2 (1.98)	4.4 (2.73)	4.6 (2.85)
	4	4.8 (2.98)	6.6 (4.10)	6.9 (4.28)
BH	1	1.8 (1.11)	2.5 (1.55)	2.6 (1.61)
	2	2.7 (1.67)	3.7 (2.29)	3.9 (2.42)
	3	4.0 (2.48)	5.4 (3.35)	5.7 (3.54)
	4	5.9 (3.66)	8.3 (5.15)	8.4 (5.21)
C	1	5.2 (3.23)	7.1 (4.41)	7.5 (4.66)
	2	7.8 (4.84)	10.7 (6.64)	11.2 (6.95)
	3	11.4 (7.08)	15.9 (9.87)	16.4 (13.97)
	4	16.9 (10.50)	23.2 (14.41)	24.3 (15.09)

NOTE: *The speeds can also be applied to the following tyres:* ***(1)*** *380/70−28* ***(2)*** *420/70−28, 480/65−28, 12.4−32.*

SPEED AT MAXIMUM POWER

Transmission with shuttle, range gear and splitter (32F+16R)

MODELS TN65, TN70, TN75 − Forward speed 30 km/h

RANGE	GEAR	REAR TYRES km/h (mph)							
		22.5LLX16.1	13.6−28 **(1)**	14.9−28 **(2)**	9.5−36	14.9−30 **(3)**	16.9−28 **(4)**	12.4−36	16.9−30 **(5)**
A	1	0.3 (0.18)	0.5 (0.31)	0.5 (0.31)	0.5 (0.31)	0.5 (0.31)	0.5 (0.31)	0.5 (0.31)	0.5 (0.31)
	2	0.5 (0.31)	0.9 (0.55)	0.7 (0.43)	0.7 (0.43)	0.7 (0.43)	0.7 (0.43)	0.7 (0.43)	0.8 (0.49)
	3	0.7 (0.43)	1.0 (0.62)	1.1 (0.68)	1.1 (0.68)	1.1 (0.68)	1.1 (0.68)	1.1 (0.68)	1.1 (0.68)
	4	1.1 (0.68)	1.5 (0.93)	1.6 (0.99)	1.6 (0.99)	1.6 (0.99)	1.6 (0.99)	1.7 (1.05)	1.9 (1.18)
BL	1	1.4 (0.86)	1.9 (1.18)	2.0 (1.24)	2.0 (1.24)	2.1 (1.30)	2.1 (1.30)	2.2 (1.36)	2.2 (1.36)
	2	2.1 (1.30)	2.9 (1.80)	3.0 (1.86)	3.0 (1.86)	3.1 (1.92)	3.1 (1.92)	3.2 (1.98)	3.3 (2.05)
	3	3.1 (2.79)	4.2 (2.60)	4.4 (2.73)	4.5 (2.79)	4.6 (2.85)	4.6 (2.85)	4.8 (2.98)	4.8 (2.98)
	4	4.5 (1.05)	6.2 (3.85)	6.5 (4.03)	6.6 (4.10)	6.8 (4.22)	6.8 (4.22)	7.1 (4.41)	7.1 (4.41)
BH	1	1.7 (1.61)	2.3 (1.42)	2.5 (1.55)	2.5 (1.55)	2.6 (1.61)	2.5 (1.55)	2.7 (1.67)	2.7 (1.67)
	2	2.6 (2.36)	3.5 (2.17)	3.7 (2.29)	3.7 (2.29)	3.8 (2.36)	3.9 (2.42)	4.0 (2.48)	4.0 (2.48)
	3	3.8 (2.36)	5.2 (3.23)	5.4 (3.35)	5.4 (3.35)	5.6 (3.47)	5.6 (3.47)	5.8 (3.60)	5.9 (3.66)
	4	5.6 (3.47)	7.8 (4.84)	8.0 (4.97)	8.1 (5.03)	8.3 (5.15)	8.3 (5.15)	8.6 (5.34)	8.7 (5.40)
C	1	5.0 (3.10)	6.8 (4.22)	7.1 (4.41)	7.2 (4.47)	7.4 (4.59)	7.5 (4.66)	7.7 (4.78)	7.7 (4.78)
	2	7.4 (4.59)	10.1 (6.27)	10.6 (6.58)	10.7 (6.64)	11.0 (6.83)	11.1 (6.89)	11.4 (7.08)	11.5 (7.14)
	3	10.9 (6.77)	14.9 (13.04)	15.6 (9.69)	15.7 (9.75)	16.2 (10.06)	16.3 (10.12)	16.8 (10.43)	16.9 (10.50)
	4	16.1 (10.00)	22.0 (13.67)	23.1 (14.35)	23.3 (14.47)	24.0 (14.91)	24.2 (15.03)	24.9 (15.47)	25.1 (15.59)

NOTE: *The speeds can also be applied to the following tyres:* ***(1)*** *380/70−28* ***(2)*** *420/70−28, 480/65−28, 12.4−32* ***(3)*** *420/70−30* ***(4)*** *540/65−28, 480/70−28* ***(5)*** *480/70− 30.*

TRANSMISSION WITH CREEPER UNIT, MECHANICAL SHUTTLE AND SPLITTER 18.64/24.85 mph (30/40 km/h) (44F+16R)

CAUTION: *With the engine running and only one gear lever in neutral, the tractor could be engaged and start moving if the lever is accidentally operated, which may lead to possible accidents. To avoid this hazard, move both levers (**1** and **2**) fig. 34 to neutral, disengage the power take−off, lower any implements and apply the handbrake before leaving the tractor.*

The gear, range gear and mechanical shuttle levers operate in the same way as the 16+16 transmission described on page 2−35.

The combination of the creeper and splitter units provides **44** forward gears and **16** reverse gears.

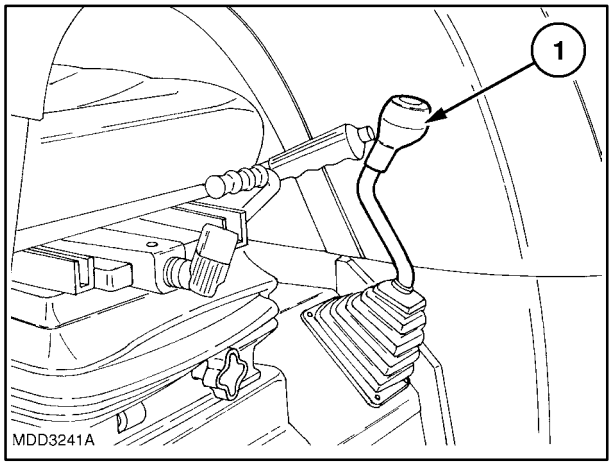

43

MECHANICAL SHUTTLE LEVER POSITIONS − Fig. 44

The mechanical shuttle lever (**1**) fig. 43, can be used to select either the creeper unit or the Splitter. To engage the creeper unit, stop the tractor and move lever (**1**) fig. 43 from the central position to the right and forwards (snail symbol). To select the splitter, move lever (**1**) fig. 43 to the right and backwards without stopping the tractor (tortoise symbol), as shown in fig. 44.

NOTE: *If the creeper unit is engaged, the use of range **C** is excluded.*

NOTE: *In order to start the engine, move the shuttle control lever (**1**) fig. 43 to the central neutral position-fig. 44. It is also advised to fully press down the clutch pedal.*

CAUTION: *The use of one of the two devices (creeper unit or Splitter), automatically excludes the engagement of the other.*

NOTE: *Tractor speeds at maximum power depend on the position of the lever (**1**) fig. 43:*

- *the forward and reverse speeds with the mechanical shuttle are shown on page 2−37 and 2−40 (30 km/h), 2−64, 2−66 (40 km/h);*
- *the forward and reverse speeds with the creeper unit engaged (snail symbol) are shown on page 2−43 (30 km/h), 2−68 (40 km/h);*
- *the forward and reverse speeds with the Splitter engaged (tortoise symbol) are shown on page 2−46 (30 km/h), 2−70 (40 km/h).*

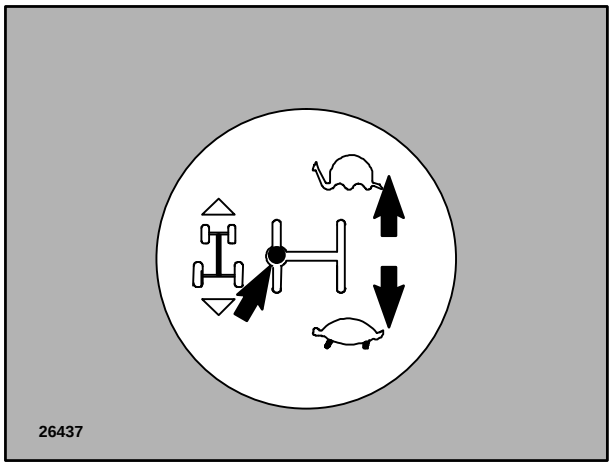

44

TRANSMISSION WITH ELECTRO−HYDRAULIC HI−LO / POWER−SHUTTLE 18.64/24.85 mph (30/40 km/h) (32F+ 16R)

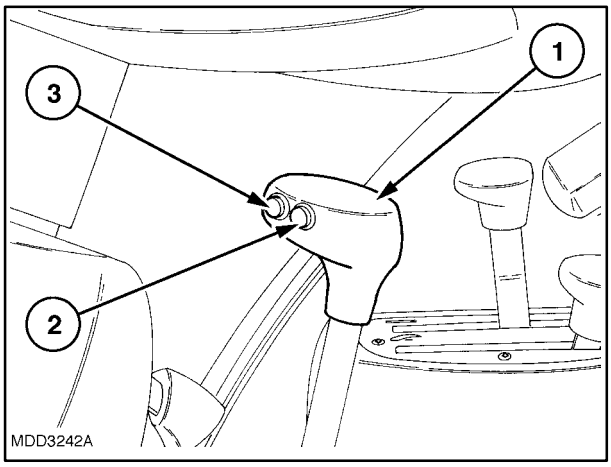

45

NOTE: *In order to start the engine, move the lever* (**1**) fig. 46 *to the neutral position and press the transmission/engine clutch pedal fully down.*

The gear and range gear levers operate in the same way as the 16+16 transmission described on page 2−35.

The gear lever (**1**) in fig. 45, is also equipped with **HI−LO** control push buttons (**2** and **3**) fig. 45, enabling the forward gears to be doubled to a total of 32 speeds. In order to switch between the **HI** and **LO** positions, press the two push buttons without operating the clutch pedal.

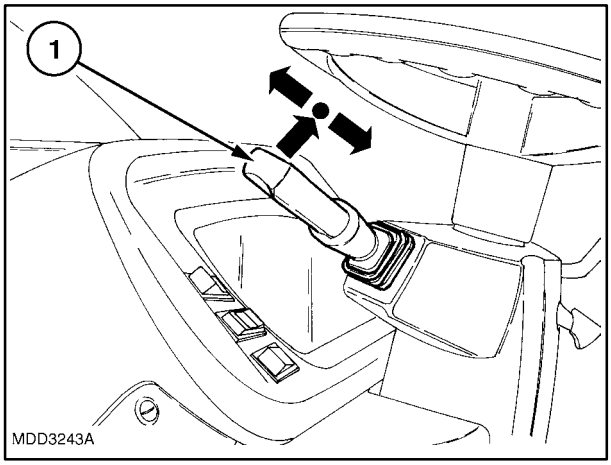

46

With the shuttle lever (**1**) fig. 48 in the reverse position (see page 2−50), the **HI** position is automatically excluded, thereby reducing the number of reverse gears to sixteen.

CAUTION: *When the tractor is parked and the engine is switched off, the parking brake* ***must*** *be applied. If the tractor is parked on a steep slope use a wedge to block the wheels.*

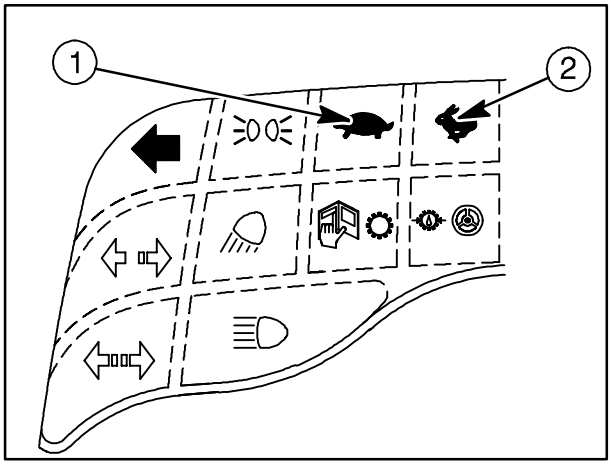

47

HI−LO PUSH BUTTONS − Fig. 45

To select the **LO** or **HI**, position, press push buttons (**2**) or (**3**), as required:

- push button (**3**) = **HI** range, signalled by the illumination of the indicator (**2**) fig. 47 (hare symbol);
- push button (**2**) = **LO** range, signalled by the illumination of the indicator (**1**) fig. 47 (tortoise symbol).

LEVER (1) ELECTRO−HYDRAULIC SHUTTLE LEVER − Fig. 48

The shuttle lever (**1**), located to the left of the steering wheel, is used to select forward or reverse drive when a gear ratio is engaged.

To select the drive direction, lift the lever and move it forwards for forward drive, or backward for reverse drive. Drive direction can be selected without pressing down the clutch pedal.

To change the drive direction without stopping the tractor, keep the lever raised and move it either forwards or backwards. Drive direction can be changed without pressing down the clutch pedal.

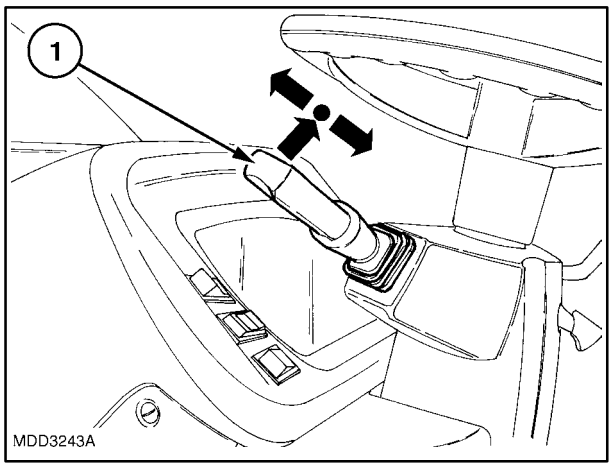

48

Operation

With the tractor moving it is possible to invert the drive direction without stopping and without pressing down the clutch pedal.

If proceeding forwards in the **HI** range and the shuttle lever (**1**) fig. 48 is moved to the reverse position, when the tractor starts reversing the indicator (**1**) fig. 49 will illuminate to signal the shift to the **LO** range.

When the shuttle lever (**1**) fig. 48 is returned to the forward drive position, the indicator (**1**) fig. 49 will illuminate and indicator (**2**) fig. 49 will flash to signal the automatic shift from the **LO** range, to the previously set **HI** range. On completion of the operation, indicator (**1**) will switch off and indicator (**2**) will remain illuminated to signal that the **HI** range is being used.

NOTE: *In order to start the engine, move the shuttle control lever* (**1**) fig. 36 *to the central neutral position* fig. 37. *It is also advised to fully press down the clutch pedal.*

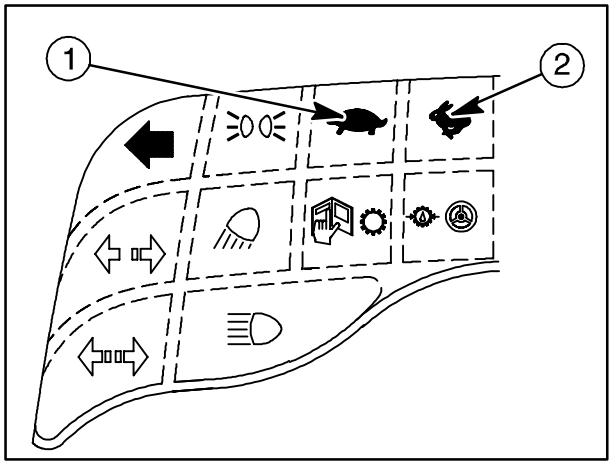

49

NOTE: *When working in the* ***LO*** *ranges, only indicator (**1**) fig. 49 will illuminate when drive direction is changed.*

CAUTION: *In order to use the Power shuttle lever (**1**) it is essential that the operator is correctly seated in the driving position.*

NOTE: *Before using the tractor at temperatures below −4 °F (−18 °C), start the engine and leave to idle at a speed of 1300÷1500 rpm for approximately 5 minutes. This will allow the gear oil to reach working temperature.*

HI−LO CLUTCH CALIBRATION

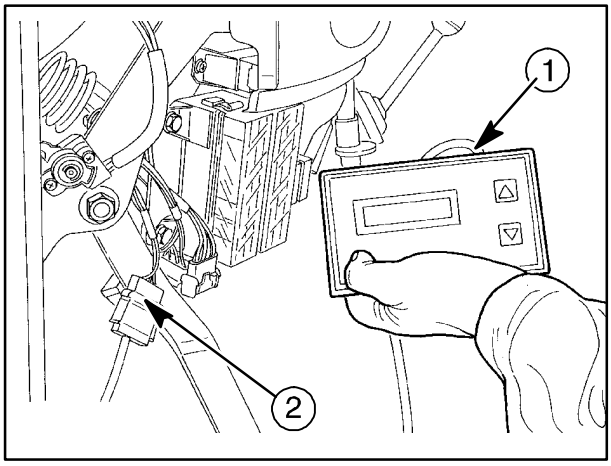

50

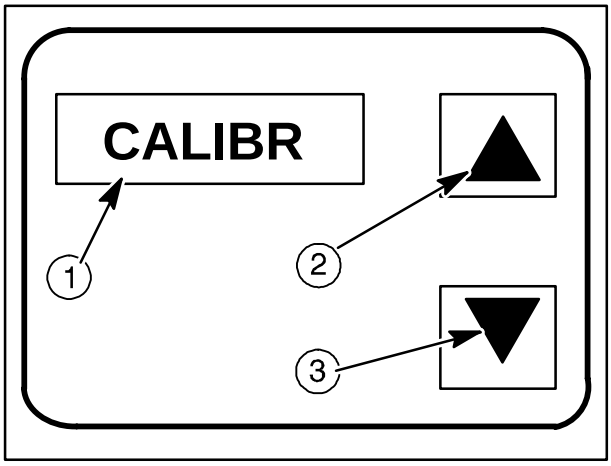

51

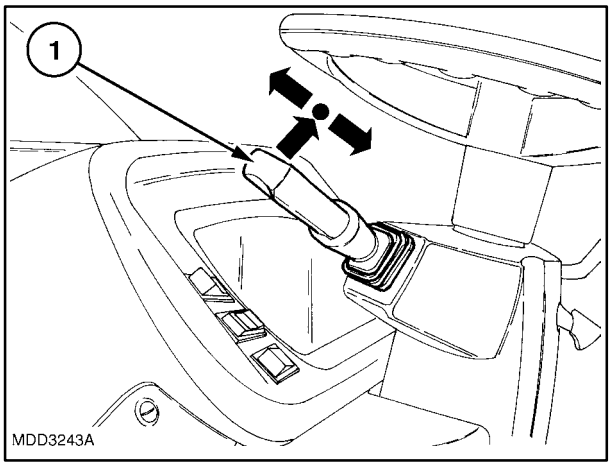

52

In order to maintain the hydraulic system in optimal conditions, clutch calibration must be carried out periodically, and after the following replacement operations:

- control unit replacement;
- solenoid valve replacement.

Carry out calibration operations according to the instructions listed below:

1. park the tractor in an obstacle−free area, switch off the engine and apply the handbrake;

2. remove the left−hand side panel on the dashboard;

3. find the black connector (**2**) fig. 50 and connect the calibration instrument (**1**) fig. 50;

4. keep push buttons (**2** and **3**) fig. 51 pressed down and start the engine;

5. after a few seconds, the display (**1**) fig. 51 will show the message “**CALIBR**”.

CAUTION: *Before starting the engine, move the shuttle lever to the neutral position and make sure that there are no people or objects in the vicinity of the tractor.*

6. release the push buttons (**2** and **3**), fig. 51 and, after a few seconds, the display (**1**) will show the transmission oil temperature (optimal temperature 122 ÷ 140 °C (50 ÷ 60 °C));

7. take the engine to approx. 1300 rpm, engage the first gear, select slow range **C**, move the shuttle lever (**1**) fig. 52 forwards and release the clutch pedal;

8. press the push button (**3**) fig. 51 with the arrow pointing downwards to calibrate the **LO** clutch, the display (**1**) fig. 51 will show a number that will increase rapidly. When the number stops and begins to flash, the **LO** clutch is calibrated.

NOTE: *If, during calibration operations, the instrument detects an anomaly, the display (**1**) fig. 51 will show a numerical code, preceded by the letter “**U**” (fault code). In this event, consult the table on page 2−53.*

On completion of calibration operations, switch off the engine in order to store the new transmission control values.

NOTE: *For **HI** clutch calibration, proceed as described in point **8** using the push button (**2**) fig. 51 with the arrow pointing upwards.*

FAULT CODE DISPLAY

Any eventual faults stored by the electronic control unit during tractor use can be checked using the instrument. To display the codes, follow the instructions noted below;

- connect the instrument as described on page 2−51;
- move the shuttle lever (**1**) fig. 52 to the reverse drive position;
- press, and hold down, the push button (**2**) with the arrow pointing upwards;
- turn the starter key to the second position (ready for starting), the display (**1**), will show a numerical code (fault code). Now release the push button.

By pressing the push button (**2**) with the arrow pointing upwards again, any other errors detected during tractor use can be checked.

The instrument will display up to a maximum of 9 faults.

Press, and hold down, the push button (**3**) with the arrow pointing downwards for at least 5 seconds in order to delete the data stored in the control unit.

Work with the tractor, checking operation as described previously.

If the instrument shows the same faults that were previously deleted or new faults, contact NEW HOLLAND specialised personnel.

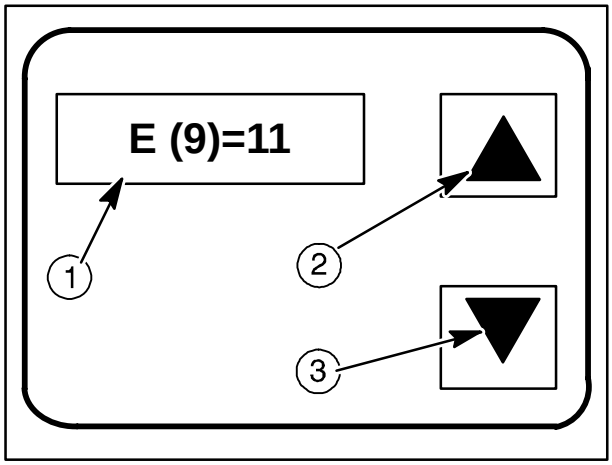

53

U..... FAULT CODES

CODE	CAUSE	SOLUTION
U 19	Oil temperature below 50 °F (10 °C) (*)	Bring oil temperature to 68°÷122 °C)
U 20	Incorrect starting procedure	Press and release the clutch pedal
U 21	Engine speed below 1200 rpm	Bring the speed to between 1400 and 1200 rpm
U 22	Engine speed above 1400 rpm	Bring the speed to between 1400 and 1200 rpm
U 23	Shuttle control lever in neutral	Engage the Shuttle lever in the forward position
U 24	Range gear lever in neutral	Engage the range gear lever in position C
U 25	Gear lever in neutral	Engage the gear lever in 1a
U 26	Clutch pedal not fully released	Release the clutch pedal
U 27	Hi (B) clutch calibration value below 230mA	Replace the solenoid valve
U 28	Hi (B) clutch calibration value above 480mA	Make sure that the solenoid valve has been fitted correctly Check the hydraulic pressure on the Hi circuit
U 29	Lo (A) clutch calibration value below 230mA	Replace the solenoid valve
U 30	Lo (A) clutch calibration value above 480mA	Make sure that the solenoid valve has been fitted correctly Check the hydraulic pressure on the Lo circuit
U 31	Tractor moving	Apply the handbrake
U 32	Hi−Lo synchroniser not engaged	Check with **HD** menu

POWER−SHUTTLE FAULT CODE SIGNALS

Any eventual anomalies that are detected will be indicated by the illuminated signal (**1**) fig. 54.

The indicator light (**1**) identifies the fault code in six phases:

1) 5 flashes in rapid succession to indicate imminent transmission of the fault code;

6) 2 second pause;

3) n... flashes to indicate the first figure of the fault code;

4) 1 second pause;

5) n... flashes to indicate the second figure of the fault code;

6) 3 second pause.

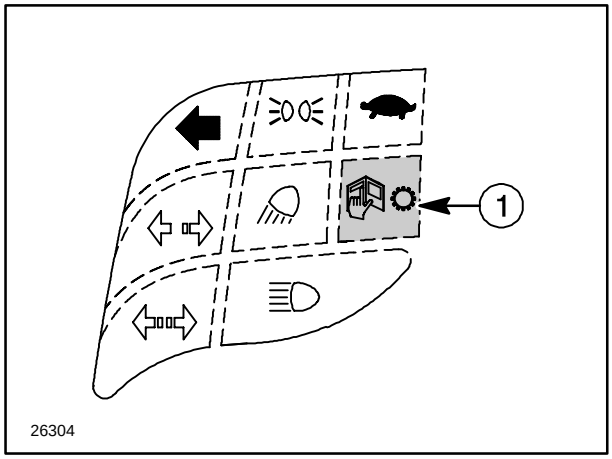

54

− Example of the interpretation of fault code number 21 −

1^ phase	2^ phase	3^ phase	4^ phase	5^ phase	6^ phase
●●●●●	pause	●●	pause	●	pause
warning transmission code	2s	first figure 2	1s	second figure 1	3s
		fault code composition 21			

CAUTION: *The system indicates eventual fault codes according to the degree of gravity.*
If a fault occurs that compromises system operation, this fault code will take priority over the indication of other codes, which will be stored in the system.
Once the fault has been repaired, the system will then display any other fault codes that are active.

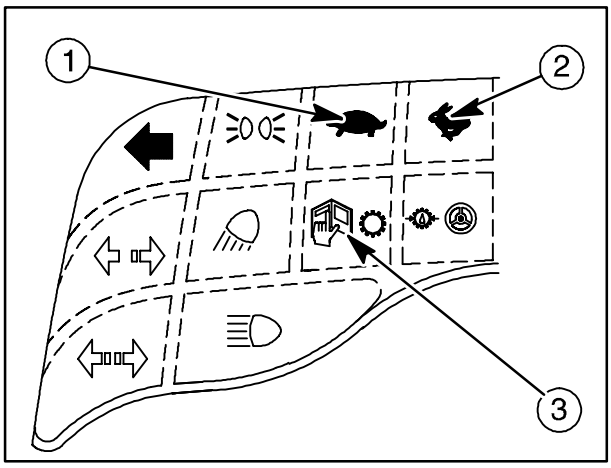

55

HI−LO/POWER−SHUTTLE TRANSMISSION DISABLED SIGNAL (32+16 and 44+16 transmissions)

The transmission can be disabled in three different ways:

1. Initial test;
2. Temporary transmission disable;
3. Permanent transmission disable.

Initial test

During the tractor starting phase, the control unit may detect conditions that could prevent operation, e.g.:

- excessive oil viscosity at low temperatures;
- hydraulic or mechanical problems.

In the event of low oil temperature due to climatic conditions, the control unit automatic test may continue for several seconds, causing indicators (**1**) and (**2**) to flash simultaneously.

In these conditions, wait until the control unit automatic test terminates and allow the engine to idle until the oil reaches working temperature. If conditions are acceptable, the two indicators (**1**) and (**2**) will stop flashing and indicator (**1**) will switch off.

Fault code **71** may be displayed (the reverse gear may be unavailable).

NOTE: *In this event, attempt to engage the reverse gear several times in order to eliminate the error condition.*

Temporarily disabled transmission

If the control unit detects an incorrect control sequence performed by the operator or a system fault, the transmission will be disabled, causing indicators (**1**) and (**2**) to flash alternately. Indicator (**3**) may also flash in the presence of an error code (fault codes can be interpreted by following the instructions on page 2−54).

The transmission can be re−enabled by moving the shuttle lever to the neutral position and/or pressing the clutch pedal fully down.

This will stop indicators (**1**) and (**2**) from flashing, whereas indicator (**3**) may remain illuminated.

Permanently disabled transmission

If the control unit detects a critical error in the transmission system, indicators (**1**) and (**2**) remain switched off, whereas indicator (**3**) will flash to signal a system fault.
In this case, the tractor cannot be used.

CAUTION: *If fault codes are displayed, contact NEW HOLLAND specialised personnel immediately.*

MODELS TN55 − SPEED AT MAXIMUM POWER

Transmission with hydraulic HI−LO / Power−Shuttle 18.64 mph (30 km/h) version (32F+16R)

Speed in forward gear

RANGE	GEAR	REAR TYRES km/h (mph)					
		22.5LLX16.1		13.6−28 **(1)**		14.9−28 **(2)**	
A	1	0.4 (0.24)	0.4 (0.24)	0.5 (0.31)	0.6 (0.37)	0.5 (0.31)	0.6 (0.37)
	2	0.5 (0.31)	0.6 (0.37)	0.7 (0.43)	0.9 (0.55)	0.8 (0.49)	0.9 (0.55)
	3	0.8 (0.49)	0.9 (0.55)	1.1 (0.68)	1.3 (0.80)	1.1 (0.68)	1.3 (0.80)
	4	1.1 (0.68)	1.4 (0.86)	1.6 (0.99)	1.9 (1.18)	1.6 (0.99)	2.0 (1.24)
BL	1	1.5 (0.93)	1.8 (1.11)	2.0 (1.24)	2.4 (1.49)	2.1 (1.30)	2.5 (1.55)
	2	2.2 (1.36)	2.6 (1.61)	3.0 (1.86)	3.6 (2.23)	3.2 (1.98)	3.8 (2.36)
	3	3.2 (1.98)	3.9 (2.42)	4.4 (2.73)	5.3 (3.29)	4.6 (2.85)	5.6 (3.47)
	4	4.8 (2.98)	5.7 (3.54)	6.6 (4.10)	7.9 (4.90)	6.9 (4.28)	8.3 (5.15)
BH	1	1.8 (1.11)	2.2 (1.36)	2.5 (1.55)	3.0 (1.86)	2.6 (1.61)	3.1 (1.92)
	2	2.7 (1.67)	3.2 (1.98)	3.7 (2.29)	4.4 (2.73)	3.9 (2.42)	4.6 (2.85)
	3	4.0 (2.48)	4.7 (2.92)	5.4 (3.35)	6.5 (4.03)	5.7 (3.54)	8.8 (5.46)
	4	5.9 (3.66)	7.0 (4.34)	8.3 (5.15)	9.6 (5.96)	8.4 (5.21)	10.1 (6.27)
C	1	5.2 (3.23)	8.3 (5.15)	7.1 (4.41)	8.6 (5.34)	7.5 (4.66)	9.0 (5.71)
	2	7.8 (4.84)	9.3 (5.77)	10.7 (6.64)	12.8 (7.95)	11.2 (6.95)	13.4 (8.32)
	3	11.4 (7.08)	13.7 (8.51)	15.9 (9.87)	18.9 (11.74)	16.4 (10.19)	19.7 (12.24)
	4	16.9 (10.50)	20.3 (12.61)	23.2 (14.41)	27.8 (17.27)	24.3 (15.09)	29.2 (18.14)

NOTE: *The speeds at maximum power in reverse are the same as for the 16+16 transmission shown on page 2−37.*

NOTE: *The speeds can also be applied to the following tyres:* ***(1)*** *380/70−28* ***(2)*** *420/70−28, 480/65−28, 12.4−32.*

MODELS TN65 TN70 AND TN75 − SPEED AT MAXIMUM POWER

Transmission with hydraulic HI−LO / Power−Shuttle 18.64 mph (30 km/h) version (32F+16R)

Forward speed

RANGE	GEAR	REAR TYRES km/h (mph)									
		22.5LLX16.1		13.6−28 **(1)**		14.9−28 **(2)**		9.5−36		14.9−30 **(3)**	
A	1	0.3 (0.18)	0.4 (0.24)	0.5 (0.31)	0.5 (0.31)	0.5 (0.31)	0.6 (0.37)	0.5 (0.31)	0.6 (0.37)	0.5 (0.31)	0.6 (0.37)
	2	0.5 (0.31)	0.6 (0.37)	0.9 (0.55)	0.8 (0.49)	0.7 (0.43)	0.9 (0.55)	0.7 (0.43)	0.9 (0.55)	0.7 (0.43)	0.9 (0.55)
	3	0.7 (0.43)	0.9 (0.55)	1.0 (0.62)	1.2 (0.74)	1.1 (0.68)	1.1 (0.80)	1.1 (0.68)	1.3 (0.80)	1.1 (0.68)	1.3 (0.80)
	4	1.1 (0.68)	1.3 (0.80)	1.5 (0.93)	1.8 (1.11)	1.6 (0.99)	1.9 (1.18)	1.6 (0.99)	1.9 (1.18)	1.6 (0.99)	1.9 (1.18)
BL	1	1.4 (0.86)	1.7 (1.05)	1.9 (1.18)	2.3 (1.42)	2.0 (1.24)	2.4 (1.49)	2.0 (1.24)	2.4 (1.49)	2.1 (1.30)	2.5 (1.55)
	2	2.1 (1.30)	2.5 (1.55)	2.9 (1.80)	3.4 (2.11)	3.0 (1.86)	3.6 (2.23)	3.0 (1.86)	3.6 (2.23)	3.1 (1.92)	3.7 (2.29)
	3	3.1 (1.92)	3.7 (2.29)	4.2 (2.60)	5.1 (3.16)	4.4 (2.73)	5.3 (3.29)	4.5 (2.79)	5.3 (3.29)	4.6 (2.85)	5.5 (3.41)
	4	4.5 (2.79)	5.5 (3.41)	6.2 (3.85)	7.5 (4.66)	6.5 (4.03)	7.9 (4.90)	6.6 (4.10)	7.9 (4.90)	6.8 (4.22)	8.2 (5.09)
BH	1	1.7 (1.05)	2.1 (1.30)	2.3 (1.42)	2.8 (1.73)	2.5 (1.55)	3.0 (1.86)	2.5 (1.55)	3.0 (1.86)	2.6 (1.61)	3.1 (1.92)
	2	2.6 (1.61)	3.1 (1.92)	3.5 (2.17)	4.2 (2.60)	3.7 (2.29)	4.4 (2.73)	3.7 (2.29)	4.4 (2.73)	3.8 (2.36)	4.6 (2.85)
	3	3.8 (2.36)	4.5 (2.79)	5.2 (3.23)	8.2 (5.09)	5.4 (3.35)	8.5 (5.28)	5.4 (3.35)	8.5 (5.28)	5.6 (3.47)	8.7 (5.40)
	4	5.6 (3.47)	6.7 (4.16)	7.8 (4.84)	9.1 (5.65)	8.0 (4.97)	9.6 (5.96)	8.1 (5.03)	9.7 (6.02)	8.3 (5.15)	10.0 (6.21)
C	1	5.0 (3.10)	5.9 (3.66)	6.8 (4.22)	8.1 (5.03)	7.1 (4.41)	8.5 (5.28)	7.2 (4.47)	8.6 (5.34)	7.4 (4.59)	8.8 (5.46)
	2	7.4 (4.59)	8.9 (5.53)	10.1 (6.27)	12.1 (7.51)	10.6 (6.58)	12.7 (7.89)	10.7 (6.64)	12.8 (7.95)	11.0 (6.83)	13.2 (8.20)
	3	10.9 (6.77)	13.0 (8.07)	4.9 (13.04)	17.9 (11.12)	15.6 (9.69)	18.7 (11.61)	15.7 (9.75)	18.9 (11.74)	16.2 (10.06)	19.5 (12.11)
	4	16.1 (10.00)	19.3 (11.99)	22.0 (13.67)	26.4 (16.40)	23.1 (14.35)	27.7 (17.21)	23.3 (14.47)	28.0 (17.39)	24.0 (14.91)	28.8 (17.89)

NOTE: *The speeds at maximum power in reverse are the same as for the 16+16 transmission shown on page 2−40.*

NOTE: *The speeds can also be applied to the following tyres:* ***(1)*** *380/70−28* ***(2)*** *420/70−28, 480/65−28, 12.4−32* ***(3)*** *420/70−30.*

MODELS TN65 TN70 AND TN75 − SPEED AT MAXIMUM POWER

Transmission with hydraulic HI−LO / Power−Shuttle 18.64 mph (30 km/h) version (32F+16R)

Forward speed

RANGE	GEAR	REAR TYRES km/h (mph)					
		16.9−28 **(4)**		12.4−36		16.9−30 **(5)**	
A	1	0.5 (0.31)	0.8 (0.49)	0.5 (0.31)	0.6 (0.37)	0.5 (0.31)	0.6 (0.37)
	2	0.7 (0.43)	0.9 (0.55)	0.7 (0.43)	0.9 (0.55)	0.8 (0.49)	0.9 (0.55)
	3	1.1 (0.68)	1.3 (0.80)	1.1 (0.68)	1.3 (0.80)	1.1 (0.68)	1.4 (0.86)
	4	1.6 (0.99)	2.0 (1.24)	1.7 (1.05)	2.1 (1.30)	1.9 (1.18)	2.0 (1.24)
BL	1	2.1 (1.30)	2.5 (1.55)	2.2 (1.36)	2.6 (1.61)	2.2 (1.36)	2.6 (1.61)
	2	3.1 (1.92)	3.8 (2.36)	3.2 (1.98)	3.9 (2.42)	3.3 (2.05)	3.9 (2.42)
	3	4.6 (2.85)	5.5 (3.41)	4.8 (2.98)	5.7 (3.54)	4.8 (2.98)	5.8 (3.60)
	4	6.8 (4.22)	8.2 (5.09)	7.1 (4.41)	8.5 (5.28)	7.1 (4.41)	8.5 (5.28)
BH	1	2.5 (1.55)	3.1 (1.92)	2.7 (1.67)	3.2 (1.98)	2.7 (1.67)	3.2 (1.98)
	2	3.9 (2.42)	4.8 (2.98)	4.0 (2.48)	4.8 (2.98)	4.0 (2.48)	4.8 (2.98)
	3	5.6 (3.47)	6.8 (4.22)	5.8 (3.60)	9.0 (5.71)	5.9 (3.66)	7.0 (4.34)
	4	8.3 (5.15)	10.1 (6.27)	8.6 (5.34)	10.4 (6.46)	8.7 (5.40)	10.4 (6.46)
C	1	7.5 (4.66)	8.9 (5.53)	7.7 (4.78)	9.2 (5.71)	7.7 (4.78)	9.3 (5.77)
	2	11.1 (6.89)	13.3 (8.26)	11.4 (7.08)	13.7 (8.51)	11.5 (7.14)	13.8 (8.57)
	3	16.3 (10.12)	19.5 (12.11)	16.8 (10.43)	20.2 (12.55)	16.9 (10.50)	20.3 (12.61)
	4	24.2 (15.03)	29.0 (18.01)	24.9 (15.47)	29.9 (18.57)	25.1 (15.59)	30.1 (18.70)

NOTE: *The speeds at maximum power in reverse are the same as for the 16+16 transmission shown on page 2−40.*

NOTE: *The speeds can also be applied to the following tyres:* ***(4)*** *540/65−28, 480/70−28* ***(5)*** *480/70−30.*

TRANSMISSION WITH HI−LO/ HYDRAULIC POWER SHUTTLE AND CREEPER UNIT 18.64/24.85 mph (30/40 km/h) (44F+ 16R)

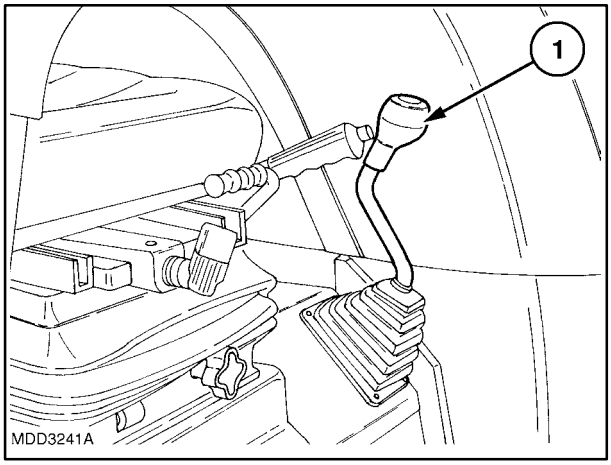

56

CAUTION: *When the tractor is parked and the engine is switched off, the parking brake must be applied.*

The gear lever, range gear and electro−hydraulic shuttle operate in the same way as the 32+16 Power− Shuttle/HI−LO transmission as described on page 2−49.

By means of the lever (**1**) fig. 56 use of the creeper unit can be selected, providing 12 reduced gears in forward drive only.

NOTE: *Selection of the creeper unit excludes operation of the* ***HI−LO*** *control push buttons. In this event the indicators will be automatically excluded.*

DANGER: *Never use the creeper unit together with the* ***C*** *fast ranges.*

CREEPER UNIT LEVER

With lever (**1**) fig. 56 in position (**N**) fig. 57 all normal forward gears can be used; if lever (**1**) fig. 56 is moved forward (snail symbol), as shown in fig. 57, the reduced forward gears are selected.

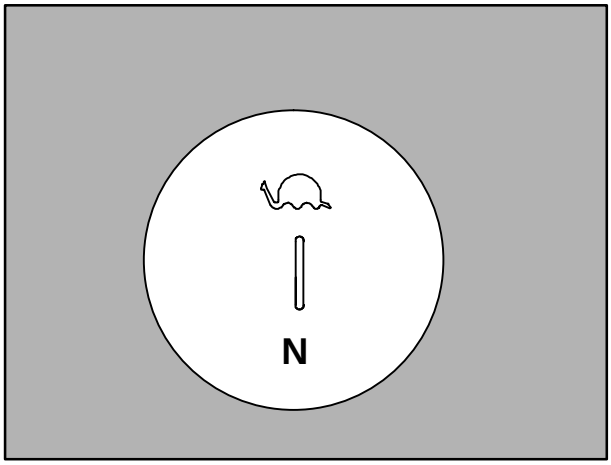

57

NOTE: *Speeds at maximum* power *in forward gear with creeper unit disengaged* ***N*** *are the same as the 32+16 transmission shown on page 2−56 and 2−57 18.64 mph (30 km/h), 2−72 and 2−73 24.85 mph (40 km/h).*
The following page shows the forward gears with the creeper unit engaged.
The reverse gears are the same as the 16+16 transmission shown on page 2−37 and 2−40 18.64 mph (30 km/h), 2−64 and 2−66 24.85 mph (40 km/h), excluding the ***C*** *fast ranges with the creeper unit engaged.*

SPEED AT MAXIMUM POWER

Transmission with hydraulic HI−LO/ Power−Shuttle and creeper unit (44F+16R)

MODEL TN55 − Forward speed 18.64 mph (30 km/h)

RANGE	GEAR	REAR TYRES km/h (mph)		
		22.5LLX16.1	13.6−28 **(1)**	14.9−28 **(2)**
A	1	0.2 (0.12)	0.2 (0.12)	0.2 (0.12)
	2	0.3 (0.18)	0.3 (0.18)	0.4 (0.24)
	3	0.4 (0.24)	0.5 (0.31)	0.5 (0.31)
	4	0.5 (0.31)	0.7 (0.43)	0.8 (0.49)
BL	1	0.9 (0.55)	0.9 (0.55)	0.9 (0.55)
	2	1.0 (0.62)	1.4 (0.86)	1.5 (0.93)
	3	1.5 (0.93)	2.1 (1.30)	2.2 (1.36)
	4	2.2 (1.36)	3.1 (1.92)	3.2 (1.98)
BH	1	0.8 (0.49)	1.2 (0.74)	1.2 (0.74)
	2	1.3 (0.80)	1.7 (1.05)	1.8 (1.11)
	3	1.9 (1.18)	2.5 (1.55)	2.7 (1.67)
	4	2.7 (1.66)	3.8 (2.36)	3.9 (2.42)

NOTE: *The speeds can also be applied to the following tyres:* ***(1)*** *380/70−28* ***(2)*** *420/70−28, 480/65−28, 12.4−32.*

SPEED AT MAXIMUM POWER

Transmission with hydraulic HI−LO/ Power−Shuttle and creeper unit (44F+16R)

MODELS TN65 TN70 AND TN75 − Forward speed 18.64 mph (30 km/h)

RANGE	GEAR	REAR TYRES km/h (mph)				
		22.5LLX16.	13.6−28 **(1)**	14.9−28 **(2)**	9.5−36	14.9−30 **(3)**
A	1	0.15 (0.09)	0.2 (0.12)	0.2 (0.12)	0.2 (0.12)	0.2 (0.12)
	2	0.2 (0.12)	0.3 (0.18)	0.3 (0.18)	0.3 (0.18)	0.4 (0.24)
	3	0.3 (0.18)	0.5 (0.31)	0.5 (0.31)	0.5 (0.31)	0.5 (0.31)
	4	0.5 (0.31)	0.7 (0.43)	0.7 (0.43)	0.7 (0.43)	0.8 (0.49)
BL	1	0.8 (0.49)	0.9 (0.55)	0.9 (0.55)	1.0 (0.62)	1.0 (0.62)
	2	0.9 (0.55)	1.4 (0.86)	1.4 (0.86)	1.4 (0.86)	1.5 (0.93)
	3	1.0 (0.62)	2.1 (1.30)	2.1 (1.30)	2.1 (1.30)	2.2 (1.36)
	4	2.1 (1.30)	3.1 (1.92)	3.1 (1.92)	3.1 (1.92)	3.3 (2.05)
BH	1	0.8 (0.49)	1.2 (0.74)	1.2 (0.74)	1.2 (0.74)	1.3 (0.80)
	2	1.2 (0.74)	1.7 (1.05)	1.7 (1.05)	1.7 (1.05)	1.9 (1.18)
	3	1.8 (1.11)	2.5 (1.55)	2.5 (1.55)	2.1 (1.30)	2.7 (1.67)
	4	2.8 (1.73)	3.7 (2.29)	3.7 (2.29)	3.8 (2.36)	4.1 (2.54)

NOTE: *The speeds can also be applied to the following tyres:* ***(1)*** *380/70−28* ***(2)*** *420/70−28, 480/65−28, 12.4−32* ***(3)*** *420/70−30.*

SPEED AT MAXIMUM POWER

Transmission with hydraulic HI−LO/ Power−Shuttle and creeper unit (44F+16R)

MODELS TN65 TN70 AND TN75 − Forward speed 18.64 mph (30 km/h)

RANGE	GEAR	REAR TYRES km/h (mph)		
		16.9−28 **(4)**	12.4−36	16.9−30 **(5)**
A	1	0.2 (0.12)	0.2 (0.12)	0.2 (0.12)
	2	0.4 (0.24)	0.4 (0.24)	0.4 (0.24)
	3	0.5 (0.31)	0.5 (0.31)	0.5 (0.31)
	4	0.8 (0.49)	0.9 (0.55)	0.8 (0.49)
BL	1	1.0 (0.62)	1.0 (0.62)	1.0 (0.62)
	2	1.5 (0.93)	1.5 (0.93)	1.5 (0.93)
	3	2.2 (1.36)	2.2 (1.36)	2.2 (1.36)
	4	3.2 (1.98)	3.3 (2.05)	3.3 (2.05)
BH	1	1.2 (0.74)	1.2 (0.74)	1.3 (0.80)
	2	1.9 (1.18)	1.9 (1.18)	1.9 (1.18)
	3	2.7 (1.67)	2.7 (1.67)	2.7 (1.67)
	4	4.0 (2.48)	4.0 (2.48)	4.0 (2.48)

NOTE: *The speeds can also be applied to the following tyres:* ***(4)*** *540/65−28, 480/70−28* ***(5)*** *480/70−30.*

FAST TRANSMISSIONS 24.85 mph (40 km/h) (4WD MODELS)

With the use of different bevel gear pairs, all previously listed transmissions can achieve a speed of 24.85 mph (40 km/h).

- Model TN55D/S:
  FRONT **11/40**; REAR **11/36**.
- Models TN65D/S TN70D/S and TN75D/S:
  FRONT **11/28**; REAR **11/39**.

When you use fast bevel gear pairs, the synchronised power take−off provides a different ratio between wheel rpm and power take−off rpm.

With the use of fast bevel gear pairs, the new ratios (in power take−off revs per **one revolution of the rear wheels**), are shown below:

- models TN55D/S:
  12.14 revs . . . (PTO 540 rpm)
  15.59 revs . . . (PTO 540E rpm)
  20.72 revs . . . (PTO 1000 rpm)

- models TN65D/S, TN70D/S and TN75D/S:
  12.94 revs . . . (PTO 540 rpm)
  16.50 revs . . . (PTO 540E rpm)
  22.07 revs . . . (PTO 1000 rpm)

WARNING: *If the tyres are changed, make sure that the new equipment bears the “A8” code on the side. Always observe the inflation pressures as specified on page 2−133; 2−134.*

NOTE: *The method for interpreting the tables showing the speeds at maximum power, in 24.85 mph (40 km/h) version, shown below, is the same as adopted for the 18.64 mph (30 km/h) versions.*

MODEL TN55 − SPEED AT MAXIMUM POWER

Transmission with mechanical shuttle 24.85 mph (40 km/h) version (16F+16R)

Forward speed

RANGE	GEAR	REAR TYRES km/h (mph)				
		22.5LLX16.1	13.6−28 **(1)**	14.9−28 **(2)**	9.5−36	14.9−30 **(3)**
A	1	0.5 (0.31)	0.7 (0.43)	0.8 (0.49)	0.8 (0.49)	0.8 (0.49)
	2	1.1 (0.68)	1.1 (0.68)	1.2 (0.74)	1.2 (0.74)	1.2 (0.74)
	3	1.2 (0.74)	1.6 (0.99)	1.7 (1.05)	1.7 (1.05)	1.8 (1.11)
	4	1.8 (1.11)	2.4 (1.49)	2.5 (1.55)	2.6 (1.61)	2.6 (1.61)
BL	1	2.3 (1.42)	3.1 (1.92)	3.3 (2.05)	3.3 (2.05)	3.4 (2.11)
	2	3.4 (2.11)	4.7 (2.92)	5.0 (3.10)	4.9 (3.04)	5.1 (3.16)
	3	5.0 (3.10)	6.9 (4.28)	7.2 (4.47)	7.3 (4.53)	7.5 (4.66)
	4	7.4 (4.59)	10.2 (6.33)	10.6 (6.58)	10.7 (6.64)	11.1 (6.89)
BH	1	2.8 (1.73)	3.8 (2.36)	4.0 (2.48)	4.1 (2.54)	4.2 (2.60)
	2	4.2 (2.60)	5.7 (3.54)	6.0 (3.72)	6.0 (3.72)	6.2 (3.85)
	3	6.1 (3.79)	8.4 (5.21)	8.8 (5.46)	8.9 (5.53)	9.2 (5.71)
	4	9.1 (5.65)	12.4 (7.70)	13.1 (8.13)	13.2 (8.20)	13.6 (8.45)
C	1	8.1 (5.03)	11.1 (6.89)	11.6 (7.20)	11.7 (7.27)	12.1 (7.51)
	2	12.0 (7.45)	16.5 (10.25)	17.3 (10.74)	17.4 (10.81)	18.0 (11.18)
	3	17.7 (10.99)	24.2 (15.03)	25.4 (15.78)	25.6 (15.90)	26.4 (16.40)
	4	26.2 (16.27)	35.9 (22.30)	37.7 (23.42)	37.9 (23.54)	39.2 (24.35)

MODEL TN55 − SPEED AT MAXIMUM POWER

Transmission with mechanical shuttle 18.64 mph (30 km/h) version (16F+16R)

Reverse speed

RANGE	GEAR	REAR TYRES km/h (mph)				
		22.5LLX16.1	13.6−28 **(1)**	14.9−28 **(2)**	9.5−36	14.9−30 **(3)**
A	1	0.5 (0.31)	0.7 (0.43)	0.8 (0.49)	0.8 (0.49)	0.8 (0.49)
	2	0.8 (0.49)	1.1 (0.68)	1.1 (0.68)	1.1 (0.68)	1.2 (0.74)
	3	1.2 (0.74)	1.6 (0.99)	1.7 (1.05)	1.7 (1.05)	1.7 (1.05)
	4	1.7 (1.05)	2.3 (1.42)	2.5 (1.55)	2.5 (1.55)	2.6 (1.61)
BL	1	2.2 (1.36)	3.0 (1.86)	3.2 (1.98)	3.2 (1.98)	3.3 (2.05)
	2	3.3 (2.05)	4.5 (2.79)	4.7 (2.92)	4.7 (2.92)	4.9 (3.04)
	3	4.8 (2.98)	6.6 (4.10)	7.0 (4.34)	7.0 (4.34)	7.2 (4.47)
	4	7.2 (4.47)	9.8 (6.08)	10.3 (6.40)	10.3 (6.40)	10.7 (6.64)
BH	1	2.7 (1.67)	3.7 (2.29)	3.9 (2.42)	3.9 (2.42)	4.0 (2.48)
	2	4.0 (2.48)	5.5 (3.41)	5.8 (3.60)	5.9 (3.66)	8.0 (4.97)
	3	5.9 (3.66)	8.1 (5.03)	8.5 (5.28)	8.6 (5.34)	8.9 (5.53)
	4	8.8 (5.46)	12.1 (7.51)	12.6 (7.82)	12.7 (7.89)	13.1 (8.13)
C	1	7.8 (4.84)	10.7 (6.64)	11.2 (6.95)	11.3 (7.02)	11.9 (7.39)
	2	11.7 (7.27)	16.0 (9.94)	16.8 (10.43)	16.9 (10.50)	17.4 (10.81)
	3	17.1 (10.62)	23.5 (14.60)	24.6 (15.28)	24.8 (15.40)	25.6 (15.90)
	4	25.4 (15.78)	35.8 (22.24)	37.5 (23.30)	36.8 (22.86)	37.9 (23.54)

NOTE: *The speeds can also be applied to the following tyres:* ***(1)*** *380/70−28* ***(2)*** *420/70−28, 480/65−28, 12.4−32* ***(3)*** *420/70−30.*

MODELS TN65 TN70 AND TN75 − SPEED AT MAXIMUM POWER

Transmission with mechanical shuttle 18.64 mph (30 km/h) version (16F+16R)

Forward speed

RANGE	GEAR	REAR TYRES km/h (mph)							
		22.5LLX16.1	13.6−28 **(1)**	14.9−28 **(2)**	9.5−36	14.9−30 **(3)**	16.9−28 **(4)**	12.4−36	16.9−30 **(5)**
A	1	0.5 (0.31)	0.7 (0.43)	0.7 (0.43)	0.7 (0.43)	0.7 (0.43)	0.8 (0.49)	0.8 (0.49)	0.8 (0.49)
	2	0.7 (0.43)	1.0 (0.62)	1.1 (0.68)	1.1 (0.68)	1.1 (0.68)	1.1 (0.68)	1.2 (0.74)	1.2 (0.74)
	3	1.1 (0.68)	1.5 (0.93)	1.6 (0.99)	1.6 (0.99)	1.6 (0.99)	1.7 (1.05)	1.7 (1.05)	1.7 (1.05)
	4	1.6 (0.99)	2.2 (1.36)	2.3 (1.42)	2.4 (1.49)	2.4 (1.49)	2.5 (1.55)	2.5 (1.55)	2.5 (1.55)
BL	1	2.1 (1.30)	2.9 (1.80)	3.0 (1.86)	3.1 (1.92)	3.1 (1.92)	3.2 (1.98)	3.3 (2.05)	3.3 (2.05)
	2	3.1 (1.92)	4.3 (2.67)	4.5 (2.79)	4.6 (2.85)	4.7 (2.92)	4.7 (2.92)	4.8 (2.98)	4.9 (3.04)
	3	4.8 (2.98)	6.3 (3.91)	6.6 (4.10)	8.7 (5.40)	8.9 (5.53)	6.9 (4.28)	7.1 (4.41)	7.2 (4.97)
	4	8.8 (5.46)	9.4 (5.84)	9.8 (6.08)	9.9 (6.15)	10.2 (6.33)	10.3 (6.40)	10.6 (6.58)	10.7 (4.47)
BH	1	2.6 (1.61)	3.5 (2.17)	3.7 (2.29)	3.7 (2.29)	3.9 (2.42)	3.9 (2.42)	4.0 (2.48)	4.0 (2.48)
	2	3.8 (2.36)	5.3 (3.29)	5.5 (3.41)	5.6 (3.47)	5.7 (3.54)	5.8 (3.60)	6.0 (3.72)	6.0 (3.72)
	3	5.7 (3.54)	7.8 (4.84)	8.1 (5.03)	8.2 (5.09)	8.4 (5.21)	8.5 (5.28)	8.8 (5.46)	8.8 (5.46)
	4	8.4 (5.21)	11.5 (7.14)	12.0 (7.45)	12.1 (7.51)	12.5 (7.76)	12.6 (7.82)	13.0 (8.07)	13.0 (8.07)
C	1	7.4 (4.59)	10.2 (6.33)	10.7 (6.64)	10.8 (6.71)	11.1 (6.89)	12.2 (7.58)	11.6 (7.20)	11.6 (7.20)
	2	11.1 (6.89)	15.2 (9.44)	15.8 (9.81)	16.1 (10.00)	16.6 (10.31)	16.7 (10.37)	17.2 (10.68)	17.3 (10.74)
	3	16.3 (10.12)	22.4 (13.91)	23.5 (14.60)	23.7 (14.72)	24.4 (15.16)	24.6 (15.28)	25.3 (15.72)	25.5 (15.84)
	4	24.2 (15.03)	33.2 (20.62)	34.8 (21.62)	35.1 (21.81)	36.1 (22.43)	36.4 (22.61)	37.5 (23.30)	37.7 (23.42)

MODELS TN65 TN70 AND TN75 − SPEED AT MAXIMUM POWER

Transmission with mechanical shuttle 18.64 mph (30 km/h) version (16F+16R)

Reverse speed

RANGE	GEAR	REAR TYRES km/h (mph)							
		22.5LLX16.1	13.6−28 **(1)**	14.9−28 **(2)**	9.5−36	14.9−30 **(3)**	16.9−28 **(4)**	12.4−36	16.9−30 **(5)**
A	1	0.5 (0.31)	0.7 (0.43)	0.7 (0.43)	0.7 (0.43)	0.7 (0.43)	0.7 (0.43)	0.8 (0.49)	0.8 (0.49)
	2	0.7 (0.43)	1.0 (0.62)	1.0 (0.62)	1.1 (0.68)	1.1 (0.68)	1.1 (0.68)	1.1 (0.68)	1.1 (0.68)
	3	1.1 (0.68)	1.5 (0.93)	1.5 (0.93)	1.5 (0.93)	1.6 (0.99)	1.6 (0.99)	1.7 (1.05)	1.7 (1.05)
	4	1.6 (0.99)	2.3 (1.42)	2.3 (1.42)	2.3 (1.42)	2.4 (1.49)	2.4 (1.49)	2.4 (1.49)	2.5 (1.55)
BL	1	2.0 (1.24)	3.0 (1.86)	2.9 (1.80)	3.0 (1.86)	3.1 (1.92)	3.1 (1.92)	3.2 (1.98)	3.2 (1.98)
	2	3.0 (1.86)	4.4 (2.73)	4.4 (2.73)	4.4 (2.73)	4.5 (2.79)	4.6 (2.85)	4.7 (2.92)	4.7 (2.92)
	3	4.5 (2.79)	8.5 (5.28)	6.4 (3.97)	6.5 (4.03)	6.7 (4.16)	6.7 (4.16)	6.9 (4.28)	7.0 (4.34)
	4	6.6 (4.10)	9.6 (5.96)	9.5 (5.90)	9.5 (5.90)	9.9 (6.15)	10.0 (6.21)	10.3 (6.40)	10.4 (6.46)
BH	1	2.5 (1.55)	3.6 (2.23)	3.6 (2.23)	3.6 (2.23)	3.7 (2.29)	3.8 (2.36)	3.9 (2.42)	3.9 (2.42)
	2	3.7 (2.29)	5.4 (3.35)	5.4 (3.35)	5.4 (3.35)	5.4 (3.35)	5.6 (3.47)	5.8 (3.60)	5.8 (3.60)
	3	5.5 (3.41)	7.9 (4.90)	7.9 (4.90)	7.9 (4.90)	7.9 (4.90)	8.2 (5.09)	8.5 (5.28)	8.6 (5.34)
	4	8.1 (5.03)	11.8 (7.33)	11.7 (7.27)	11.8 (7.33)	11.8 (7.33)	12.2 (7.58)	12.6 (7.82)	12.7 (7.89)
C	1	7.2 (4.47)	10.5 (6.52)	10.4 (6.46)	10.5 (6.52)	10.5 (6.52)	10.9 (6.77)	11.2 (6.95)	11.3 (7.02)
	2	10.8 (6.71)	15.6 (9.69)	15.5 (9.63)	15.6 (9.69)	15.6 (9.69)	16.2 (10.06)	16.7 (10.37)	16.8 (10.43)
	3	15.8 (9.81)	22.9 (14.22)	22.7 (14.10)	22.9 (14.22)	22.9 (14.22)	23.8 (14.78)	24.5 (15.22)	24.73 (15.35)
	4	23.4 (14.54)	34.0 (21.12)	33.7 (20.94)	33.4 (20.75)	34.00 (21.12)	35.3 (21.93)	36.3 (22.55)	36.6 (22.74)

NOTE: *The speeds can also be applied to the following tyres:* ***(1)*** *380/70−28* ***(2)*** *420/70−28, 480/65−28, 12.4−32* ***(3)*** *420/70−30* ***(4)*** *540/65−28, 480/70−28* ***(5)*** *480/70−30.*

SPEED AT MAXIMUM POWER

Transmission with creeper unit 18.64 mph (30 km/h) version (28F+16R)

MODEL TN55 − Forward speed

RANGE	GEAR	REAR TYRES km/h (mph)				
		22.5LLX16.1	13.6−28 **(1)**	14.9−28 **(2)**	9.5−36	14.9−30 **(3)**
A	1	0.1 (0.06)	0.2 (0.12)	0.2 (0.12)	0.2 (0.12)	0.2 (0.12)
	2	0.2 (0.12)	0.3 (0.18)	0.3 (0.18)	0.3 (0.18)	0.3 (0.18)
	3	0.3 (0.18)	0.4 (0.24)	0.4 (0.24)	0.4 (0.24)	0.5 (0.31)
	4	0.5 (0.31)	0.6 (0.37)	0.7 (0.43)	0.7 (0.43)	0.7 (0.43)
BL	1	0.6 (0.37)	0.8 (0.49)	0.9 (0.55)	0.9 (0.55)	0.9 (0.55)
	2	0.9 (0.55)	1.2 (0.74)	1.3 (0.80)	1.3 (0.80)	1.3 (0.80)
	3	1.3 (0.80)	1.8 (1.11)	1.9 (1.18)	1.9 (1.18)	1.9 (1.18)
	4	1.9 (1.18)	2.6 (1.61)	2.8 (1.73)	2.8 (1.73)	2.9 (1.80)
BH	1	0.7 (0.43)	1.0 (0.62)	1.0 (0.62)	1.1 (0.68)	1.1 (0.68)
	2	1.1 (0.68)	1.5 (0.93)	1.6 (0.99)	1.6 (0.99)	1.6 (0.99)
	3	1.6 (0.99)	2.2 (1.36)	2.3 (1.42)	2.3 (1.42)	2.4 (1.49)
	4	2.4 (1.49)	3.2 (1.98)	3.4 (2.11)	3.4 (2.11)	3.5 (2.17)

NOTE: *The speeds can also be applied to the following tyres:* ***(1)*** *380/70−28* ***(2)*** *420/70−28, 480/65−28, 12.4−32* ***(3)*** *420/70−30.*

SPEED AT MAXIMUM POWER

Transmission with creeper unit 18.64 mph (30 km/h) version (28F+16R)

MODELS TN65 TN70 AND TN75 − Forward speed 24.85 mph (40 km/h)

RANGE	GEAR	REAR TYRES km/h (mph)							
		22.5LLX16.1	13.6−28 **(1)**	14.9−28 **(2)**	9.5−36	14.9−30 **(3)**	16.9−28 **(4)**	12.4−36	16.9−30 **(5)**
A	1	0.1 (0.06)	0.2 (0.12)	0.2 (0.12)	0.2 (0.12)	0.2 (0.12)	0.2 (0.12)	0.2 (0.12)	0.2 (0.12)
	2	0.2 (0.12)	0.3 (0.18)	0.3 (0.18)	0.3 (0.18)	0.3 (0.18)	0.3 (0.18)	0.3 (0.18)	0.3 (0.18)
	3	0.3 (0.18)	0.4 (0.24)	0.4 (0.24)	0.4 (0.24)	0.4 (0.24)	0.4 (0.24)	0.4 (0.24)	0.4 (0.24)
	4	0.4 (0.24)	0.6 (0.37)	0.6 (0.37)	0.6 (0.37)	0.6 (0.37)	0.6 (0.37)	0.7 (0.43)	0.7 (0.43)
BL	1	0.5 (0.31)	0.7 (0.43)	0.9 (0.55)	0.8 (0.49)	0.8 (0.49)	0.8 (0.49)	0.8 (0.49)	0.9 (0.55)
	2	0.8 (0.49)	1.1 (0.68)	1.2 (0.74)	1.2 (0.74)	1.2 (0.74)	1.2 (0.74)	1.3 (0.80)	1.3 (0.80)
	3	1.2 (0.74)	1.8 (1.11)	1.7 (1.05)	1.7 (1.05)	1.8 (1.11)	1.8 (1.11)	1.9 (1.18)	1.9 (1.18)
	4	1.8 (1.11)	2.4 (1.49)	2.6 (1.61)	2.6 (1.61)	2.6 (1.61)	2.7 (1.67)	2.7 (1.67)	2.8 (1.73)
BH	1	0.7 (0.43)	0.9 (0.55)	1.0 (0.62)	1.0 (0.62)	1.0 (0.62)	1.0 (0.62)	1.0 (0.62)	1.0 (0.62)
	2	1.0 (0.62)	1.4 (0.86)	1.4 (0.86)	1.4 (0.86)	1.5 (0.93)	1.5 (0.93)	1.5 (0.93)	1.6 (0.99)
	3	1.5 (0.93)	2.0 (1.24)	2.1 (1.30)	2.1 (1.30)	2.2 (1.36)	2.2 (1.36)	2.3 (1.42)	2.3 (1.42)
	4	2.2 (1.36)	3.0 (1.86)	3.1 (1.92)	3.1 (1.92)	3.2 (1.98)	3.3 (2.05)	3.4 (2.11)	3.4 (2.11)

NOTE: *The speeds can also be applied to the following tyres:* ***(1)*** *380/70−28* ***(2)*** *420/70−28, 480/65−28, 12.4−32* ***(3)*** *420/70−30* ***(4)*** *540/65−28, 480/70−28* ***(5)*** *480/70−30.*

SPEED AT MAXIMUM POWER

Transmission with mechanical shuttle, range gear and splitter (32F+16R)

MODEL TN55 − Forward speed 18.64 mph (30 km/h)

RANGE	GEAR	REAR TYRES km/h (mph)				
		22.5LLX16.1	13.6−28 **(1)**	14.9−28 **(2)**	9.5−36	14.9−30 **(3)**
A	1	0.5 (0.31)	0.6 (0.37)	0.7 (0.43)	0.7 (0.43)	0.7 (0.43)
	2	0.7 (0.43)	0.9 (0.55)	1.0 (0.62)	1.0 (0.62)	1.0 (0.62)
	3	1.0 (0.62)	1.4 (0.86)	1.4 (0.86)	1.4 (0.86)	1.5 (0.93)
	4	1.5 (0.93)	2.0 (1.24)	2.1 (1.30)	2.1 (1.30)	2.2 (1.36)
BL	1	1.9 (1.18)	2.6 (1.61)	2.7 (1.67)	2.8 (1.73)	2.8 (1.73)
	2	2.8 (1.73)	3.9 (2.42)	4.1 (2.54)	4.1 (2.54)	4.2 (2.60)
	3	4.2 (2.60)	5.7 (3.54)	6.0 (3.72)	6.0 (3.72)	6.2 (3.85)
	4	6.2 (3.85)	8.5 (5.28)	8.9 (5.53)	9.0 (5.59)	9.2 (5.71)
BH	1	2.3 (1.42)	3.2 (1.98)	3.4 (2.11)	3.4 (2.11)	3.5 (2.17)
	2	3.5 (2.17)	4.8 (2.98)	5.0 (3.10)	5.0 (3.10)	5.2 (3.23)
	3	5.1 (3.16)	7.0 (4.34)	7.3 (4.53)	7.4 (4.59)	7.6 (4.72)
	4	7.6 (4.72)	10.4 (6.46)	10.9 (6.77)	11.0 (6.83)	11.3 (7.02)
C	1	6.7 (4.16)	9.2 (5.71)	9.7 (6.02)	9.7 (6.02)	10.1 (6.27)
	2	10.0 (6.21)	13.7 (8.51)	14.4 (8.94)	14.5 (9.00)	15.0 (9.32)
	3	14.7 (9.13)	20.2 (12.55)	21.2 (13.17)	21.4 (13.29)	22.0 (13.67)
	4	21.8 (13.54)	29.9 (18.57)	31.4 (19.51)	31.6 (19.63)	32.6 (20.25)

NOTE: *The speeds can also be applied to the following tyres:* ***(1)*** *380/70−28* ***(2)*** *420/70−28, 480/65−28, 12.4−32* ***(3)*** *420/70−30.*

SPEED AT MAXIMUM POWER

Transmission with mechanical shuttle, range gear and splitter (32F+16R)

MODELS TN65 TN70 AND TN75 − Forward speed 24.85 mph (40 km/h)

RANGE	GEAR	REAR TYRES km/h (mph)							
		22.5LLX16.1	13.6−28 **(1)**	14.9−28 **(2)**	9.5−36	14.9−30 **(3)**	16.9−28 **(4)**	12.4−36	16.9−30 **(5)**
A	1	0.4 (0.24)	0.6 (0.37)	0.6 (0.37)	0.6 (0.37)	0.6 (0.37)	0.6 (0.37)	0.6 (0.37)	0.7 (0.43)
	2	0.5 (0.31)	0.9 (0.55)	0.9 (0.55)	0.9 (0.55)	0.9 (0.55)	0.9 (0.55)	1.0 (0.62)	1.0 (0.62)
	3	0.9 (0.55)	1.3 (0.80)	1.3 (0.80)	1.3 (0.80)	1.4 (0.86)	1.4 (0.86)	1.4 (0.86)	1.4 (0.86)
	4	1.4 (0.86)	1.9 (1.18)	2.0 (1.24)	2.0 (1.24)	2.0 (1.24)	2.0 (1.24)	2.1 (1.30)	2.1 (1.30)
BL	1	1.8 (1.11)	2.4 (1.49)	2.5 (1.55)	2.5 (1.55)	2.6 (1.61)	2.6 (1.61)	2.7 (1.67)	2.7 (1.67)
	2	2.6 (1.61)	3.6 (2.23)	3.8 (2.36)	3.8 (2.36)	3.9 (2.42)	3.9 (2.42)	4.1 (2.54)	4.1 (2.54)
	3	3.5 (2.17)	5.3 (3.29)	5.5 (3.41)	5.6 (3.47)	5.8 (3.60)	5.8 (3.60)	6.0 (3.72)	6.0 (3.72)
	4	5.7 (3.54)	7.8 (4.84)	8.2 (5.09)	8.3 (5.15)	8.5 (5.28)	8.6 (5.34)	8.8 (5.46)	8.9 (5.53)
BH	1	2.1 (1.30)	2.9 (1.80)	3.1 (1.92)	3.1 (1.92)	3.2 (1.98)	3.2 (1.98)	3.3 (2.05)	3.4 (2.11)
	2	3.2 (1.98)	4.4 (2.73)	4.6 (2.85)	4.6 (2.85)	4.8 (2.98)	4.8 (2.98)	5.0 (3.10)	5.0 (3.10)
	3	4.7 (2.92)	6.5 (4.03)	6.8 (4.22)	8. 8 (5.46)	7.0 (4.34)	7.1 (4.41)	7.3 (4.53)	7.4 (4.59)
	4	6.0 (3.72)	9.6 (5.96)	10.0 (6.21)	10.1 (6.27)	10.4 (6.46)	10.5 (6.52)	10.8 (6.71)	10.9 (6.77)
C	1	6.2 (3.85)	8.5 (5.28)	8.9 (5.53)	9.0 (5.59)	9.3 (5.77)	9.3 (5.77)	9.5 (5.90)	9.9 (6.15)
	2	9.2 (5.71)	12.9 (8.01)	13.3 (8.26)	13.4 (8.32)	13.8 (8.57)	13.9 (8.63)	14.3 (8.88)	14.5 (9.00)
	3	13.6 (8.45)	18.8 (11.68)	19.6 (12.17)	19.7 (12.2)	20.3 (12.61)	20.5 (12.73)	21.1 (13.11)	21.2 (13.17)
	4	20.1 (12.48)	27.6 (17.14)	29.0 (18.01)	29.2 (18.14)	30.1 (18.70)	30.3 (18.82)	31.2 (19.38)	31.5 (19.57)

NOTE: *The speeds can also be applied to the following tyres:* ***(1)*** *380/70−28* ***(2)*** *420/70−28, 480/65−28, 12.4−32* ***(3)*** *420/70−30* ***(4)*** *540/65−28, 480/70−28* ***(5)*** *480/70−30.*

MODEL TN55 − SPEED AT MAXIMUM POWER

Transmission with hydraulic HI−LO / Power−Shuttle 40 km/h version (32F+16R)

Forward speed

RANGE	GEAR	REAR TYRES km/h (mph)									
		22.5LLX16.1		13.6−28 **(1)**		14.9−28 **(2)**		9.5−36		14.9−30 **(3)**	
A	1	0.5 (0.31)	0.5 (0.31)	0.6 (0.37)	0.7 (0.43)	0.7 (0.43)	0.8 (0.49)	0.7 (0.43)	0.8 (0.49)	0.7 (0.43)	0.8 (0.49)
	2	0.7 (0.43)	0.8 (0.49)	0.9 (0.55)	1.1 (0.68)	1.0 (0.62)	1.2 (0.74)	1.0 (0.62)	1.2 (0.74)	1.0 (0.62)	1.2 (0.74)
	3	1.0 (0.62)	1.2 (0.74)	1.4 (0.86)	1.6 (0.99)	1.4 (0.86)	1.7 (1.05)	1.4 (0.86)	1.7 (1.05)	1.5 (0.93)	1.8 (1.11)
	4	1.5 (0.93)	1.8 (1.11)	2.0 (1.24)	2.4 (1.49)	2.1 (1.30)	2.5 (1.55)	2.1 (1.30)	2.6 (1.61)	2.2 (1.36)	2.6 (1.61)
BL	1	1.9 (1.18)	2.3 (1.42)	2.6 (1.61)	3.1 (1.92)	2.7 (1.67)	3.3 (2.05)	2.8 (1.73)	3.3 (2.05)	2.8 (1.73)	3.4 (2.11)
	2	2.8 (1.73)	3.4 (2.11)	3.9 (2.42)	4.7 (2.92)	4.1 (2.54)	4.9 (3.04)	4.1 (2.54)	4.9 (3.04)	4.2 (2.60)	5.1 (3.16)
	3	4.2 (2.60)	5.0 (3.10)	5.7 (3.54)	6.9 (4.28)	6.0 (3.72)	7.2 (4.47)	6.0 (3.72)	7.3 (4.53)	6.2 (3.85)	7.5 (4.66)
	4	6.2 (3.85)	7.4 (4.59)	8.5 (5.28)	10.2 (6.33)	8.9 (5.53)	10.6 (6.58)	9.0 (5.59)	10.7 (6.64)	9.2 (5.71)	11.1 (6.89)
BH	1	2.3 (1.42)	2.8 (1.73)	3.2 (1.98)	3.8 (2.36)	3.4 (2.11)	4.0 (2.48)	3.4 (2.11)	4.1 (2.54)	3.5 (2.17)	4.2 (2.60)
	2	3.5 (2.17)	4.2 (2.60)	4.8 (2.98)	5.7 (3.54)	5.0 (3.10)	6.0 (3.72)	5.0 (3.10)	6.0 (3.72)	5.2 (3.23)	6.2 (3.85)
	3	5.1 (3.16)	6.1 (3.79)	7.0 (4.34)	8.4 (5.21)	7.3 (4.53)	8.8 (5.46)	7.4 (4.59)	8.9 (5.53)	7.6 (4.72)	9.2 (5.71)
	4	7.6 (4.72)	9.1 (5.65)	10.4 (6.46)	12.4 (7.70)	10.9 (6.77)	13.1 (8.13)	11.0 (6.83)	13 (8.20)	11.3 (7.02)	13.6 (8.45)
C	1	6.7 (4.16)	8.1 (5.03)	9.2 (5.71)	11.1 (6.89)	9.7 (6.02)	11.6 (7.20)	9.7 (6.02)	11.7 (7.27)	10.1 (6.27)	12.1 (7.51)
	2	10.0 (6.21)	12.0 (7.45)	13.7 (8.51)	16.5 (10.25)	14.4 (8.94)	17.3 (10.74)	14.5 (9.00)	17.4 (10.81)	15.0 (9.32)	18.0 (11.18)
	3	14.7 (9.13)	17.7 (10.99)	20.2 (12.55)	24.2 (15.03)	21.2 (13.17)	25.4 (15.78)	21.4 (13.29)	25.8 (16.03)	22.0 (13.67)	26.4 (16.40)
	4	21.8 (13.54)	26.2 (16.27)	29.9 (18.57)	35.9 (22.30)	31.4 (19.51)	37.7 (23.42)	31.6 (19.63)	38.0 (23.61)	32.6 (20.25)	39.2 (24.35)

NOTE: *The speeds can also be applied to the following tyres:* ***(1)*** *380/70−28* ***(2)*** *420/70−28, 480/65−28, 12.4−32* ***(3)*** *420/70−30.*

MODELS TN65 TN70 AND TN75 − SPEED AT MAXIMUM POWER

Transmission with hydraulic HI−LO / Power−Shuttle 24.85 mph (40 km/h) version (32F+16R)

Forward speed

RANGE	GEAR	REAR TYRES km/h (mph)							
		22.5LLX16.1		13.6−28 **(1)**		14.9−28 **(2)**		9.5−36	
A	1	0.4 (0.24)	0.5 (0.31)	0.6 (0.37)	0.7 (0.43)	0.6 (0.37)	0.7 (0.43)	0.6 (0.37)	0.7 (0.43)
	2	0.5 (0.31)	0.7 (0.43)	0.9 (0.55)	1.0 (0.62)	0.9 (0.55)	1.1 (0.68)	0.9 (0.55)	1.1 (0.68)
	3	0.9 (0.55)	1.1 (0.68)	1.3 (0.80)	1.5 (0.93)	1.3 (0.80)	1.6 (0.99)	1.3 (0.80)	1.6 (0.99)
	4	1.4 (0.86)	1.8 (1.11)	1.9 (1.18)	2.2 (1.36)	2.0 (1.24)	2.3 (1.42)	2.0 (1.24)	2.4 (1.49)
BL	1	1.8 (1.11)	2.1 (1.30)	2.4 (1.49)	2.9 (1.80)	2.5 (1.55)	3.0 (1.86)	2.5 (1.55)	3.1 (1.92)
	2	2.6 (1.61)	3.1 (1.92)	3.6 (2.23)	4.3 (2.67)	3.8 (2.36)	4.5 (2.79)	3.8 (2.36)	4.6 (2.85)
	3	3.5 (2.17)	4.6 (2.85)	5.3 (3.29)	6.3 (3.91)	5.5 (3.41)	6.6 (4.10)	5.6 (3.47)	6.7 (4.16)
	4	5.7 (3.54)	6.8 (4.22)	7.8 (4.84)	9.4 (5.84)	8.2 (5.09)	9.8 (6.08)	8.3 (5.15)	9.9 (6.15)
BH	1	2.1 (1.30)	2.6 (1.61)	2.9 (1.80)	3.5 (2.17)	3.1 (1.92)	3.7 (2.29)	3.1 (1.92)	3.7 (2.29)
	2	3.2 (1.98)	3.8 (2.36)	4.4 (2.73)	5.3 (3.29)	4.6 (2.85)	5.5 (3.41)	4.6 (2.85)	5.6 (3.47)
	3	4.7 (2.92)	5.7 (3.54)	6.5 (4.03)	7.8 (4.84)	6.8 (4.22)	8.1 (5.03)	8.8 (5.46)	8.2 (5.09)
	4	6.0 (3.72)	8.4 (5.21)	9.6 (5.96)	11.5 (7.14)	10.0 (6.21)	12.0 (7.45)	10.1 (6.27)	12.1 (7.51)
C	1	6.2 (3.85)	7.4 (4.59)	8.5 (5.28)	10.2 (6.33)	8.9 (5.53)	10.7 (6.64)	9.0 (5.59)	10.8 (6.71)
	2	9.2 (5.71)	11.1 (6.89)	12.9 (8.01)	15.2 (9.44)	13.3 (8.26)	16.0 (9.94)	13.4 (8.32)	16.1 (10.00)
	3	13.6 (8.45)	16.3 (10.12)	18.8 (11.68)	22.4 (13.91)	19.6 (12.17)	23.5 (14.60)	19.7 (12.24)	23.7 (14.72)
	4	20.1 (12.48)	24.2 (15.03)	27.6 (17.14)	33.2 (20.62)	29.0 (18.01)	34.8 (21.62)	29.2 (18.14)	35.1 (21.81)

NOTE: *The speeds can also be applied to the following tyres:* ***(1)*** *380/70−28* ***(2)*** *420/70−28, 480/65−28, 12.4−32.*

MODELS TN65 TN70 AND TN75 − SPEED AT MAXIMUM POWER

Transmission with hydraulic HI−LO / Power−Shuttle 24.85 mph (40 km/h) version (32F+16R)

Forward speed

RANGE	GEAR	REAR TYRES km/h (mph)							
		14.9−30 **(3)**		16.9−28 **(4)**		12.4−36		16.9−30 **(5)**	
A	1	0.6 (0.37)	0.7 (0.43)	0.6 (0.37)	0.8 (0.49)	0.6 (0.37)	0.8 (0.49)	0.7 (0.43)	0.8 (0.49)
	2	0.9 (0.55)	1.1 (0.68)	0.9 (0.55)	1.1 (0.68)	1.0 (0.62)	1.2 (0.74)	1.0 (0.62)	1.2 (0.74)
	3	1.4 (0.86)	1.6 (0.99)	1.4 (0.86)	1.7 (1.05)	1.4 (0.86)	1.7 (1.05)	1.4 (0.86)	1.7 (1.05)
	4	2.0 (1.24)	2.4 (1.49)	2.0 (1.24)	2.5 (1.55)	2.1 (1.30)	2.5 (1.55)	2.1 (1.30)	2.5 (1.55)
BL	1	2.6 (1.61)	3.2 (1.98)	2.6 (1.61)	3.2 (1.98)	2.7 (1.67)	3.3 (2.05)	2.7 (1.67)	3.3 (2.05)
	2	3.9 (2.42)	4.7 (2.92)	3.9 (2.42)	4.7 (2.92)	4.1 (2.54)	4.9 (3.04)	4.1 (2.54)	4.9 (3.04)
	3	5.8 (3.60)	6.9 (4.28)	5.8 (3.60)	7.0 (4.34)	6.0 (3.72)	7.2 (4.47)	6.0 (3.72)	7.2 (4.47)
	4	8.5 (5.28)	10.2 (6.33)	8.6 (5.34)	10.3 (6.40)	8.8 (5.46)	10.5 (6.52)	8.9 (5.53)	10.7 (6.64)
BH	1	3.2 (1.98)	3.9 (2.42)	3.2 (1.98)	3.9 (2.42)	3.3 (2.05)	4.0 (2.48)	3.4 (2.11)	4.0 (2.48)
	2	4.8 (2.98)	5.7 (3.54)	4.8 (2.98)	5.8 (3.60)	5.0 (3.10)	6.0 (3.72)	5.0 (3.10)	6.0 (3.72)
	3	7.0 (4.34)	8.4 (5.21)	7.1 (4.41)	8.5 (5.28)	7.3 (4.53)	8.8 (5.46)	7.4 (4.59)	8.8 (5.46)
	4	10.4 (6.46)	12.5 (7.76)	10.5 (6.52)	12.6 (7.82)	10.8 (6.71)	13.0 (8.07)	10.9 (6.77)	13.1 (8.13)
C	1	9.3 (5.77)	11.1 (6.89)	9.3 (5.77)	11.2 (6.95)	9.5 (5.90)	11.6 (7.20)	9.9 (6.15)	11.6 (7.20)
	2	13.8 (8.57)	16.6 (10.31)	13.9 (8.63)	16.7 (10.37)	14.3 (8.88)	17.2 (10.68)	14.5 (9.00)	17.3 (10.74)
	3	20.3 (12.61)	24.4 (15.16)	20.5 (12.73)	24.6 (15.28)	21.1 (13.11)	25.3 (15.72)	21.2 (13.17)	25.5 (15.84)
	4	30.1 (18.70)	36.1 (22.43)	30.3 (18.82)	36.4 (22.61)	31.2 (19.38)	37.5 (23.30)	31.5 (19.57)	37.8 (23.48)

NOTE: *The speeds can also be applied to the following tyres:* ***(3)*** *420/70−30* ***(4)*** *540/65−28, 480/70−28* ***(5)*** *480/70−30.*

Transmission with hydraulic HI−LO/Power−Shuttle/ and creeper unit (44F+16RM)

MODEL TN55 − Forward speed 18.64 mph (40 km/h)

SPEED AT MAXIMUM POWER

RANGE	GEAR	REAR TYRES km/h (mph)				
		22.5LLX16.1	13.6−28 **(1)**	14.9−28 **(2)**	9.5−36	14.9−30 **(3)**
A	1	0.1 (0.06)	0.2 (0.12)	0.2 (0.12)	0.2 (0.12)	0.2 (0.12)
	2	0.2 (0.12)	0.3 (0.18)	0.3 (0.18)	0.3 (0.18)	0.3 (0.18)
	3	0.3 (0.18)	0.4 (0.24)	0.4 (0.24)	0.4 (0.24)	0.5 (0.31)
	4	0.5 (0.31)	0.6 (0.37)	0.7 (0.43)	0.7 (0.43)	0.7 (0.43)
BL	1	0.6 (0.37)	0.8 (0.49)	0.9 (0.55)	0.9 (0.55)	0.9 (0.55)
	2	0.9 (0.55)	1.2 (0.74)	1.3 (0.80)	1.3 (0.80)	1.3 (0.80)
	3	1.3 (0.80)	1.8 (1.11)	1.9 (1.18)	1.9 (1.18)	1.9 (1.18)
	4	1.9 (1.18)	2.6 (1.61)	2.8 (1.73)	2.8 (1.73)	2.9 (1.80)
BH	1	0.7 (0.43)	1.0 (0.62)	1.0 (0.62)	1.1 (0.68)	1.1 (0.68)
	2	1.1 (0.68)	1.5 (0.93)	1.6 (0.99)	1.6 (0.99)	1.6 (0.99)
	3	1.6 (0.99)	2.2 (1.36)	2.3 (1.42)	2.3 (1.42)	2.4 (1.49)
	4	2.4 (1.49)	3.2 (1.98)	3.4 (2.11)	3.4 (2.11)	3.5 (2.17)

NOTE: *The speeds can also be applied to the following tyres:* ***(1)*** *380/70−28* ***(2)*** *420/70−28, 480/65−28, 12.4−32* ***(3)*** *420/70−30.*

Transmission with hydraulic HI−LO/Power−Shuttle/ and creeper unit (44F+16RM)

MODELS TN65 TN70 AND TN75 − Forward speed 24.85 mph (40 km/h)

RANGE	GEAR	REAR TYRES km/h (mph)							
		22.5LLX16.1	13.6−28 **(1)**	14.9−28 **(2)**	9.5−36	14.9−30 **(3)**	16.9−28 **(4)**	12.4−36	16.9−30 **(5)**
A	1	0.1 (0.06)	0.2 (0.12)	0.2 (0.12)	0.2 (0.12)	0.2 (0.12)	0.2 (0.12)	0.2 (0.12)	0.2 (0.12)
	2	0.2 (0.12)	0.3 (0.18)	0.3 (0.18)	0.3 (0.18)	0.3 (0.18)	0.3 (0.18)	0.3 (0.18)	0.3 (0.18)
	3	0.3 (0.18)	0.4 (0.24)	0.4 (0.24)	0.4 (0.24)	0.4 (0.24)	0.4 (0.24)	0.4 (0.24)	0.4 (0.24)
	4	0.4 (0.24)	0.6 (0.37)	0.6 (0.37)	0.6 (0.37)	0.6 (0.37)	0.6 (0.37)	0.7 (0.43)	0.7 (0.43)
BL	1	0.5 (0.31)	0.7 (0.43)	0.8 (0.49)	0.8 (0.49)	0.8 (0.49)	0.8 (0.49)	0.8 (0.49)	0.9 (0.55)
	2	0.8 (0.49)	1.1 (0.68)	1.2 (0.74)	1.2 (0.74)	1.2 (0.74)	1.2 (0.74)	1.3 (0.80)	1.3 (0.80)
	3	1.2 (0.74)	1.8 (1.11)	1.7 (1.05)	1.7 (1.05)	1.8 (1.11)	1.8 (1.11)	1.9 (1.18)	1.9 (1.18)
	4	1.8 (1.11)	2.4 (1.49)	2.6 (1.61)	2.6 (1.61)	2.6 (1.61)	2.7 (1.67)	2.7 (1.67)	2.8 (1.73)
BH	1	0.7 (0.43)	1.0 (0.62)	1.0 (0.62)	1.0 (0.62)	1.0 (0.62)	1.0 (0.62)	1.0 (0.62)	1.0 (0.62)
	2	1.0 (0.62)	1.4 (0.86)	1.4 (0.86)	1.4 (0.86)	1.5 (0.93)	1.5 (0.93)	1.5 (0.93)	1.6 (0.93)
	3	1.5 (0.93)	2.0 (1.24)	2.1 (1.30)	2.1 (1.30)	2.2 (1.36)	2.2 (1.36)	2.3 (1.42)	2.3 (1.42)
	4	2.2 (1.36)	3.0 (1.86)	3.1 (1.92)	3.1 (1.92)	3.2 (1.98)	3.3 (2.05)	3.4 (2.11)	3.4 (2.11)

NOTE: *The speeds can also be applied to the following tyres:* ***(1)*** *380/70−28* ***(2)*** *420/70−28, 480/65−28, 12.4−32* ***(3)*** *420/70−30* ***(4)*** *540/65−28, 480/70−28* ***(5)*** *480/70−30.*

MECHANICALLY CONTROLLED FOUR−WHEEL DRIVE (MODELS TN55D TN65D TN70D TN75D)

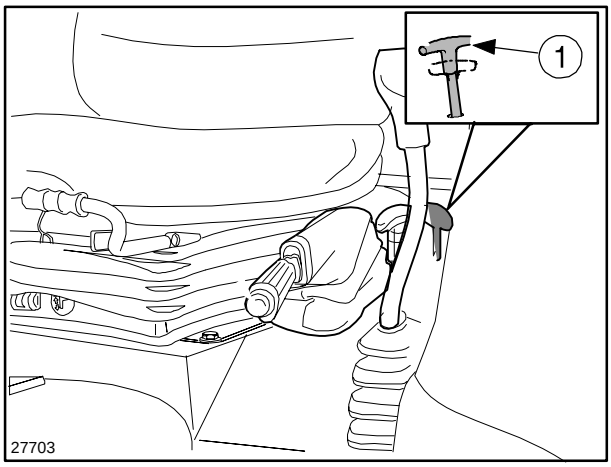

58

USING FOUR−WHEEL DRIVE

Front−wheel drive increases the tractor's grip on the ground; the advantages are evident when working on uneven, muddy or slippery ground, when ploughing or working in difficult conditions.

Four−wheel drive engagement − Fig. 58

Front−wheel drive engagement and disengagement is carried out by means of lever (**1**) with the tractor moving slowly and preferably with the engine decelerating.
Avoid carrying out this operation under stress. If the manoeuvre proves to be difficult with the tractor moving in a straight line, keeping the lever in the engaged position, slightly turn the steering wheel in both directions until the control has been engaged.

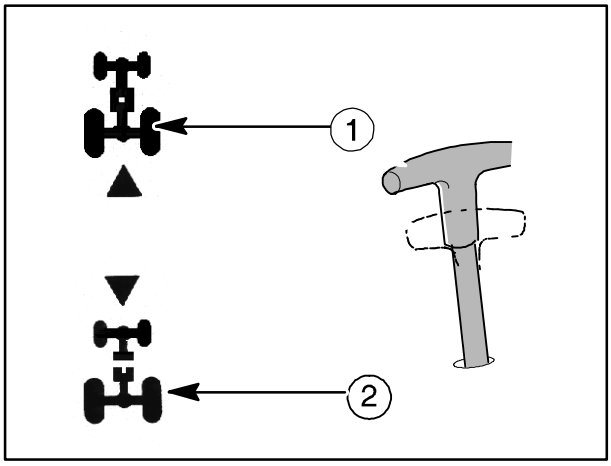

59

Control lever engage/disengage positions − Fig. 59

− Lever in position **1**, pulled upwards = four−wheel drive engaged;

− Lever in position **2**, pushed downwards = four−wheel drive disengaged.

CAUTION: *Do not use front−wheel drive when driving on hard roads as this increases front tyre wear. Abnormal tyre wear can also be due to non−compliance with the recommended tyre pressures.*

ELECTRO−HYDRAULIC FOUR−WHEEL DRIVE

USING FOUR−WHEEL DRIVE

Front−wheel drive increases the tractor's grip on the ground; the advantages are evident when working on uneven, muddy or slippery ground, when ploughing or working in difficult conditions.

Manual operation.

Engage four−wheel drive by switching button (**1**) fig. 61 to position **A**.
In this position, front−wheel drive will be permanently engaged; indicator (**1**) fig. 60 will illuminate to show that front−wheel drive is engaged.
To disengage, press the switch to position **A** once more.

Automatic mode.

By switching button (**1**) fig. 61 to position (**C**) indicator (**2**) fig. 60 will illuminate, signalling that automatic four−wheel drive has been selected. Four−wheel drive engagement will be signalled by indicator (**1**) fig. 60 on the control panel.
This system will automatically engage four−wheel drive if the wheels slip in the following conditions:

− during traction, (e.g.: when working) on slippery ground;

− on downward slopes, (e.g.: when towing a heavy trailer) on slippery ground.

Four−wheel drive is automatically disengaged when the wheels stop slipping and/or when a pre−set steering angle is exceeded and with speed above 9.32/15.53 mph (15/25 km/h) when travelling downhill.
To disengage, press push button (**1**) fig. 61 to position (**c**) once more.
The indicator (**2**) fig. 60 will switch off.

NOTE: Use of the automatic four−wheel mode is highly recommended.

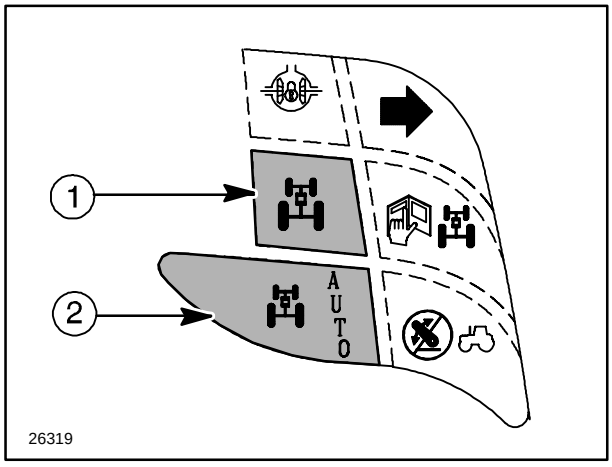

60

CAUTION: *Four−wheel drive is engaged automatically when the brake pedals are pressed simultaneously, regardless of the selection made.*

CAUTION: *Do not use the manual four−wheel drive setting when driving on roads as, unlike the automatic setting, this increases wear on the front tyres.*

NOTE: *When the push button is released after having been pressed to positions **A** or **C**, it will automatically return to position **B**.*

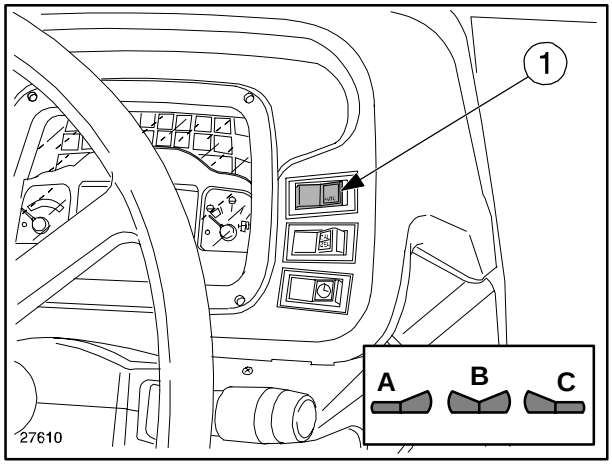

61

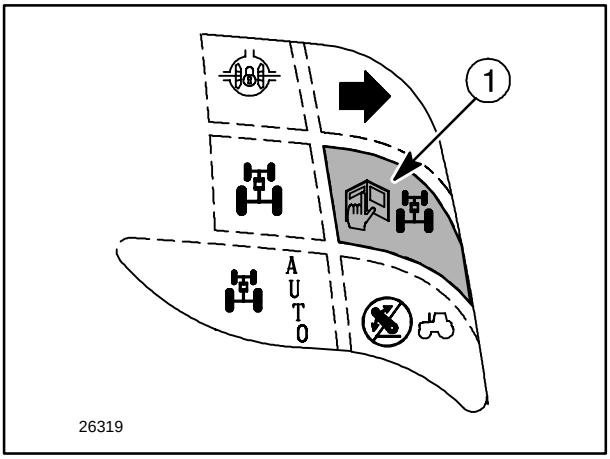

62

AUTOMATIC FOUR−WHEEL DRIVE FAULT CODES

If an electrical or electronic fault occurs, indicator (**1**) fig. 62 will illuminate to signal the fault.

The indicator light (**1**) identifies the error code in six phases:

1) 5 flashes in rapid succession to indicate imminent transmission of the error code;

2) 2 second pause;

3) n... flashes to indicate the first figure of the fault code;

4) 1 second pause;

5) n... flashes to indicate the second figure of the fault code;

6) 3 second pause.

− Example of the interpretation of error code number 31 −

1^ phase	2^ phase	3^ phase	4^ phase	5^ phase	6^ phase
●●●●●	pause	●●●	pause	●	pause
warning transmission code	2s	first figure 3	1s	second figure 1	3s
		fault code composition 31			

CAUTION: *The system indicates eventual error codes according to the degree of gravity.*
If a fault occurs that disables the automatic four−wheel drive mode, this fault code will take priority over the indication of other codes, which will be stored in the system.
Once the fault has been repaired, the system will then display any other error codes that are active.

CAUTION: *If a fault is signalled but the tractor continues to operate normally, contact your New Holland dealer to have the tractor checked if necessary.*

BRAKES

HANDBRAKE − Fig. 63

The handbrake is located to the left of the driver's seat.

To apply the handbrake, press the red button on the end of the lever (**1**) and pull upwards. When pulled three notches, the handbrake should engage.

If brake travel exceeds the three notches, adjust as described on page 3−22.

To release the handbrake, pull the lever slightly upwards, press the red button and then fully lower the lever.

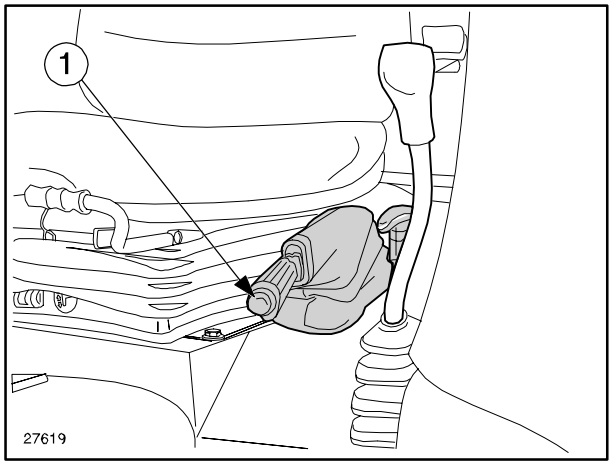

63

CAUTION: *When leaving the tractor switch off the engine and apply the handbrake. If the operator leaves the driving position without having carried out the aforementioned operations, an alarm is activated. The alarm will only be interrupted when the operations have been carried out.*

BRAKE PEDALS − Fig. 64

CAUTION: *On 4WD tractors, transmission to the front axle is engaged automatically when the brakes are applied on all four wheels.*
With automatic engagement of 4WD, the brakes function much more efficiently, therefore care must be taken when braking sharply.

The brakes are controlled by pedals (**1**) and (**2**); they can also be separately controlled, in order to facilitate turning in tight spaces, or coupled for normal tractor braking.

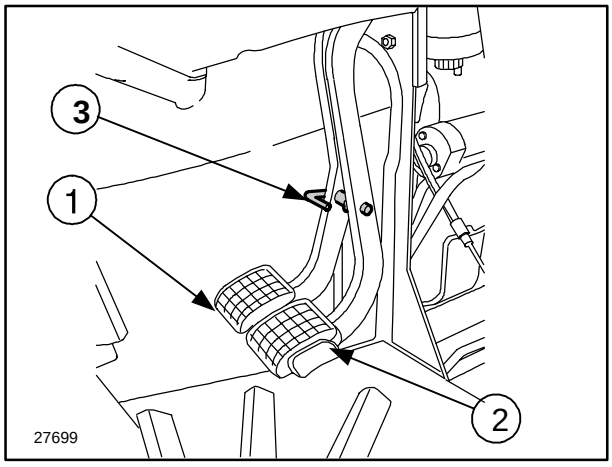

64

CAUTION: *Always connect the brakes with the safety pin provided (**3**), as shown in the drawing, when on roads and when towing trailers with hydraulically operated brakes.*

MECHANICALLY CONTROLLED REAR DIFFERENTIAL LOCK

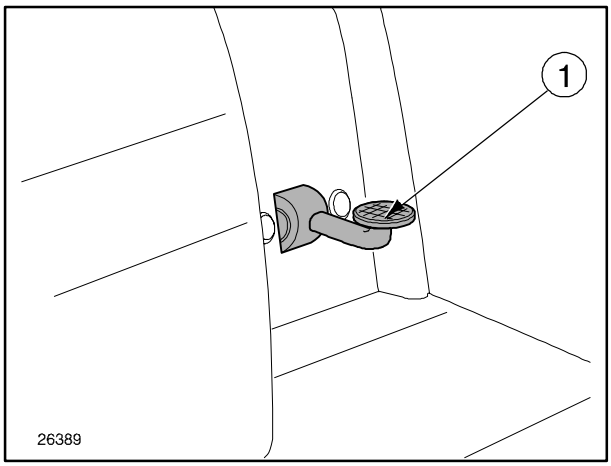

65

The differential allows the drive wheels to rotate at different speeds when the tractor is turning.

The differential is fitted with a locking device controlled by pedal (**1**) fig. 65. The differential should be locked in the following situations:

— when ploughing, to prevent the wheel that is not in the furrow from slipping;

— when one of the drive wheels is on uneven, muddy or slippery ground and tends to slip.

To lock the differential, reduce tractor speed and fully press down the pedal (**1**) fig. 65. The differential will remain locked.

To release the lock, press one of the two brake pedals.

CAUTION: *Do not keep the differential locked unnecessarily as this wastes power and can cause damaging stresses in the transmission system, tyre wear and steering problems.*

LIM−SLIP FRONT DIFFERENTIAL LOCK

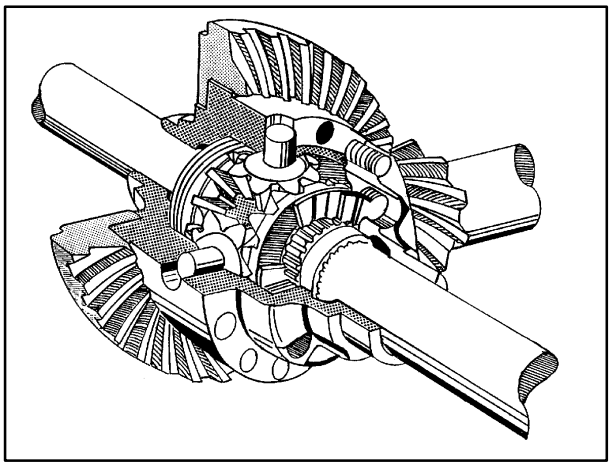

66

The limited slip differential lock (LIM−SLIP) is a two planetary pinion type, complete with two multi−disc clutch blocks fitted between the planetary pinions and the differential box.

This differential lock device is totally automatic, requires no manual operation and notably reduces (without completely eliminating) wheel slipping that may result from tractor grip loss.

The difference in revs between the planetary pinions and the differential box, when a wheel begins to slip as a result of grip loss, is obstructed by the clutch blocks that are compressed by axial thrust from the torque transmitted to the planetary pinions by the bevel gear pairs, by means of the teeth on the two planetary pinions.

The torque may differ according to the condition of the ground, thereby proportionally varying the axial thrust on the clutch blocks, consolidating the planetary pinions with the differential box which results in the axle being able to successfully overcome the difficult ground conditions.

ELECTRO−HYDRAULICALLY CONTROLLED DIFFERENTIAL LOCK

DIFFERENTIAL LOCK ELECTRO−HYDRAULIC CONTROL PUSHBUTTON

The differential allows the drive wheels to rotate at different speeds when the tractor is turning.

The differential is fitted with an electro−hydraulically controlled locking device, operated by switch (**1**) fig. 68.

Engagement will be signalled by the illumination of an indicator (**1**) on the dashboard fig. 67.

It is advisable to lock the differential in the following situations:

— when ploughing, to prevent the wheel that is not in the furrow from slipping;

— when one of the drive wheels is on uneven, muddy or slippery ground and tends to slip.

To release the differential, reduce the tractor speed and put the switch (**1**) in position **A**, fig. 68 for tractors with a mechanical lift unit (**1**) fig. 69 for models with an electronically controlled lift.

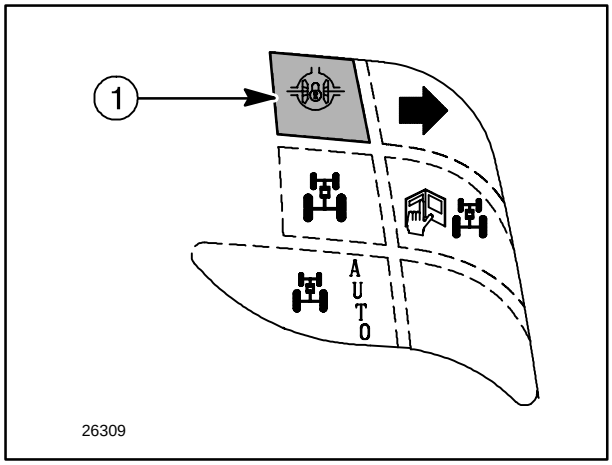

67

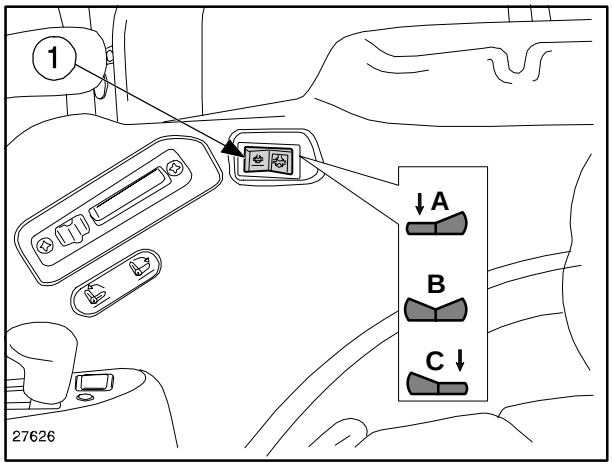

68

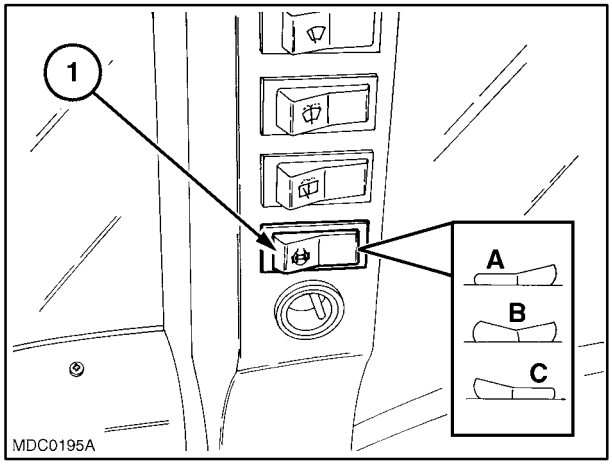

69

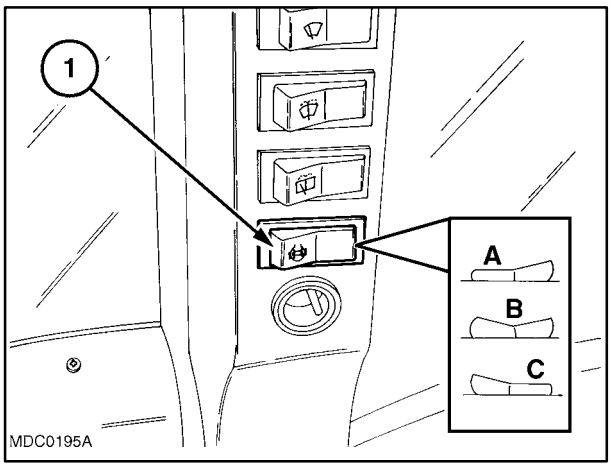

70

DIFFERENTIAL LOCK OPERATION

The control buttons (**1**) fig. 70 and (**1**) fig. 71 have three positions:

- position **A** = differential lock permanently disengaged;
- position **B** = predisposition for differential lock engagement;
- position **C** = differential lock engaged. The differential lock disengages when one of the two brake pedals is pressed (**1** and **2**) fig. 72. To re−engage, return the push button to position **C**. When released, the push button will automatically return to position **B**.
  To totally deactivate the function, return the push button to position **A**.

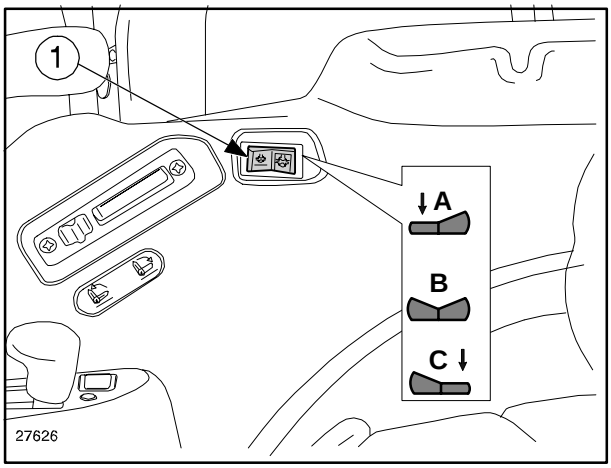

71

NOTE: *The position **C** on the differential lock control push button is only used for the first engagement.After the first engagement, with the engine running and the control button in position **A**, to re−engage the lock, press the button to position **B**.*

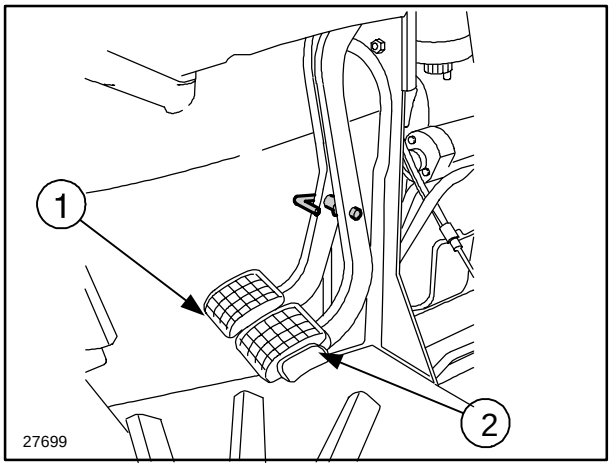

72

CAUTION: *If the differential fails to disengage, briefly press the brake pedal that acts on the wheel on the outside of the curve.*

CAUTION: *Only lock the differential in the event of one of the two wheels slipping excessively. Do not keep the differential locked unnecessarily as this wastes power and can cause damaging stresses in the transmission system, tyre wear and steering problems.*

POWER TAKE−OFF

GENERAL INSTRUCTIONS

The power take−off fitted on your tractor is used to transfer power from the engine directly to the implement. It can be controlled directly by the engine, or directly by the tractor's transmission drive gears.

All tractors are fitted as standard with power take−off synchronised at 540/540/E rpm, with mechanically controlled engage/disengage system.

The power take−off is available in the following versions:

- one speed, 540 rpm;
- one speed, 540 rpm synchronised;
- two speeds, 540/540E rpm;
- two speeds, 540/540E rpm synchronised;
- three speeds, 540/540E/1000 rpm synchronised.

CAUTION: *Before operating an implement driven by the power take−off, check that the safety clutch on the implement transmission shaft functions correctly, i.e.: it slips when overloaded.*

CAUTION: *Never operate the implement connected to the power take−off at a higher speed than specified.*

DANGER: *Always make sure that the drive shaft plastic guards are in perfect condition.*

DANGER: *Always switch the engine off before starting work on an implement connected to the power take−off.*

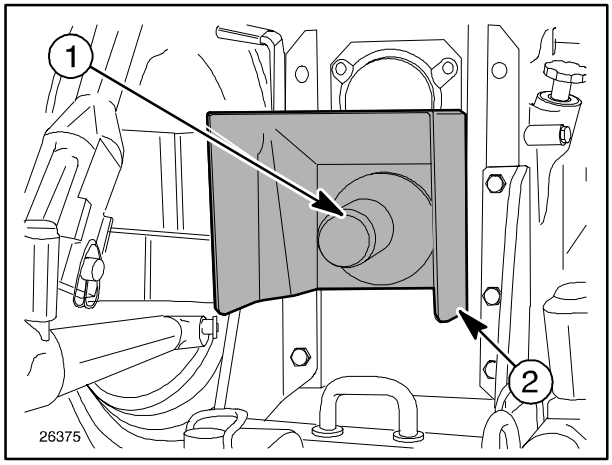

73

When the power take−off is not in use, always fit the safety cover (**1**) fig. 73 on the splined output shaft.

CAUTION: *When the power take−off is not in use or when, with an implement connected, the power take−off has been disengaged by means of the operation selection lever, always remember to move the lever to the disengaged position. When the power take−off is not connected to implements, keep the control handle in the disengaged position.*

CAUTION: *When using the power take−off, and especially when changing speeds, always make sure that the tractor is fitted with the correct shaft for the speed selected.*
When using an implement that requires a speed of 540 rpm, never select a speed of 1000 rpm, and vice versa.

DANGER: *Never climb on the power take−off guard (**2**) fig. 73 when in operation.*

OPERATION OF THE POWER TAKE−OFF

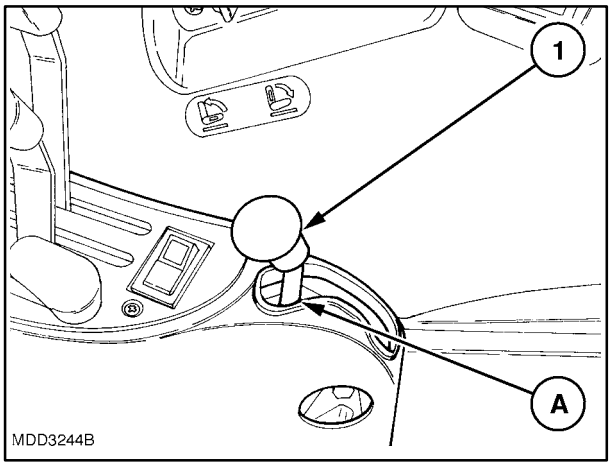

74

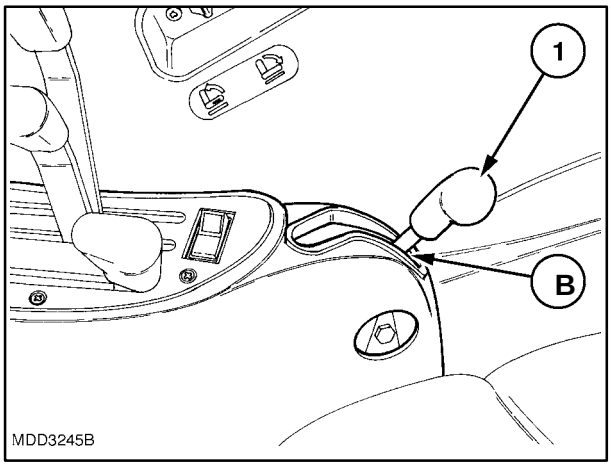

75

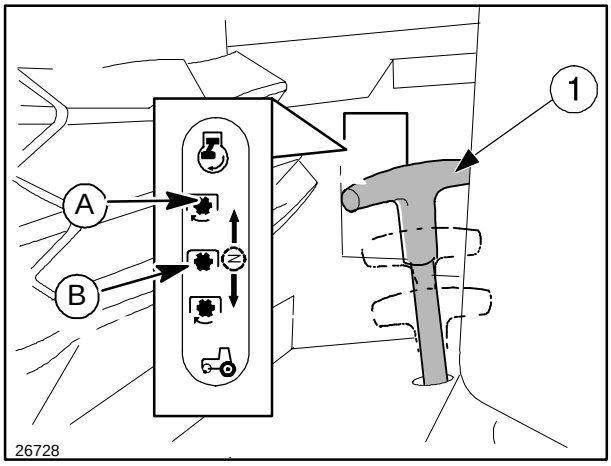

76

Independent PTO operated by the engine − Figs. 74 and 75

To operate the power take−off, engage the clutch by moving the control lever **1** forward to position (**A**) fig. 74.

In these conditions, operation is totally independent of the tractor ground speed, and the following operations can be performed:

- halt the tractor without stopping the power take−off;
- stop the power take−off without halting the tractor (by disengaging the power take−off clutch).

The shaft rotates in a clockwise direction, viewed from behind the tractor.

To disengage the power take−off, move the lever backwards to position **B**.

CAUTION: *Always disengage the power take−off and apply the handbrake before leaving the tractor. If the operator leaves the driving position without having carried out the aforementioned operations, an alarm is activated. The alarm will only be interrupted when the operations have been carried out.*

WARNING: *When the power take−off is not in use, keep the clutch lever (**1**) fig. 75 in the disengaged position **B**.*

NOTE: *When the engine is switched off, the PTO clutch lever (**1**) moves automatically to the neutral position **B**, even if it has not been disengaged manually.*

Independent PTO operated by the engine (variation with synchronised power take−off) − Fig. 76

To operate the power take−off, proceed as follows:

- keep the clutch lever in the disengaged position **B** (**1**) fig. 75;
- with the tractor stationary, move the mode selection lever (**1**) fig. 76 to position **A**;
- after a few moments, move lever (**1**) fig. 74 fully forward to position **A**.

Power take−off synchronised with transmission for models with mechanical transmission

To operate the power take−off, proceed as follows:

- disengage the clutch lever (**1**) fig. 74 (position **B**);
- with the tractor stationary, fully press down the clutch pedal;
- after a few moments, move the mode selection lever (**1**) fig. 77 fully down to position **B** fig. 77 and release the clutch pedal.

CAUTION: *Avoid engaging the synchronised power take−off when the tractor is moving. When using trailers with drive wheels, it is advisable to select a PTO speed of 1000 rpm.*

Power take−off synchronised with transmission for models with Power−Shuttle/HI−LO transmission (not available on all markets)

WARNING: *When not using the power take−off on models with mechanical transmission, keep the clutch lever (**1**) in position **B** (disengaged) fig. 75 and the mode selection lever (**1**) fig. 77 in neutral position **A**.*

To operate the power take−off, proceed as follows:

- disengage the clutch lever (**1**) fig. 74;
- with the tractor stationary, move the mode selection lever (**1**) fig. 77 to position **B** fig. 77.

In these conditions, motion is imparted to the power take−off directly by the transmission: when the tractor is stationary, the synchronised power take−off does not turn; when switching from forward to reverse, the direction of rotation of the shaft is inverted.

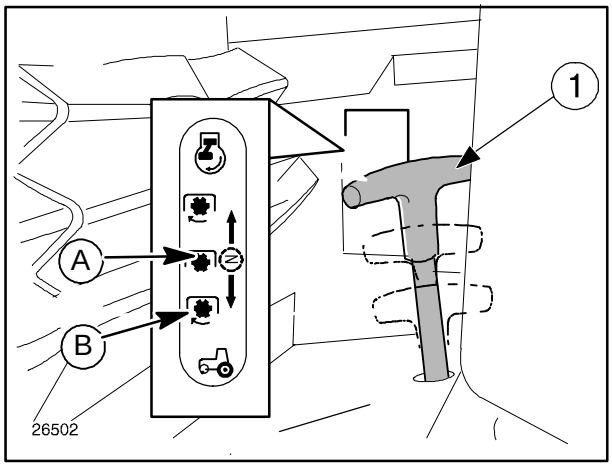

77

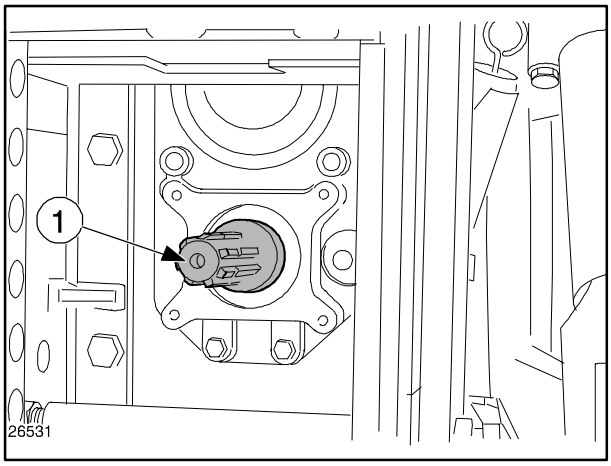

78

PTO SPEED

Power take−off

Fitted with an output shaft (**1**) fig. 78 of 1 $^{3}/_{8}$" with six grooves.

PTO speeds:

Power take−off 540

- 540 rpm with engine at: . . . . . 1957 rpm
  634 rpm with engine at: . . . . . 2300 rpm

Power take−off 540 rpm. (not available on all markets)

- 540 rpm with engine at: . . . . . 2196 rpm
  565 rpm with engine at: . . . . . 2300 rpm

Power take−off 540E

- 540 rpm with engine at: . . . . . 1535 rpm
  809 rpm with engine at: . . . . . 2300 rpm

Power take−off 1000

- 1000 rpm with engine at: . . . . . 2125 rpm
  1082 rpm with engine at: . . . . . 2300 rpm

NOTE − *with the PTO speed selection lever set to 540E rpm, 540 rpm can be obtained from the output shaft with the engine speed at 1534 rpm. instead of 1957 rpm.*

SYNCHRONISED POWER TAKE−OFF REVS

With any gear engaged, the grooved output shaft, **for one revolution of the rear wheels, makes the following revs with:**

Power take−off **540 rpm**:

- Model TN55D/S
  18.64 mph (30 km/h) 15.23
  4WD 24.85 mph (40 km/h) 12.14
- Models TN65D/S TN70D/S TN75D/S
  18.64 mph (30 km/h) 16.69
  4WD 24.85 mph (40 km/h) 12.94

Power take−off **540E rpm**:

- Model TN55D/S
  18.64 mph (30 km/h) 19.42
  4WD 24.85 mph (40 km/h) 15.59
- Models TN65D/S TN70D/S TN75D/S
  18.64 mph (30 km/h) 21.29
  4RM 24.85 mph (40 km/h) 16.50

Power take−off **1000 rpm**:

- Model TN55D/S
  18.64 mph (30 km/h) 25.98
  24.85 mph (40 km/h) 20.72
- Models TN65D/S TN70D/S TN75D/S
  18.64 mph (30 km/h) 28.47
  4WD 24.85 mph (40 km/h) 22.07

THREE−SPEED POWER TAKE−OFF SELECTION − Fig. 79

Selection with lever

To select power take−off speed, position lever (**1**) on sector (**2**) at the selected speed, securing the lever (**1**) in the respective groove.

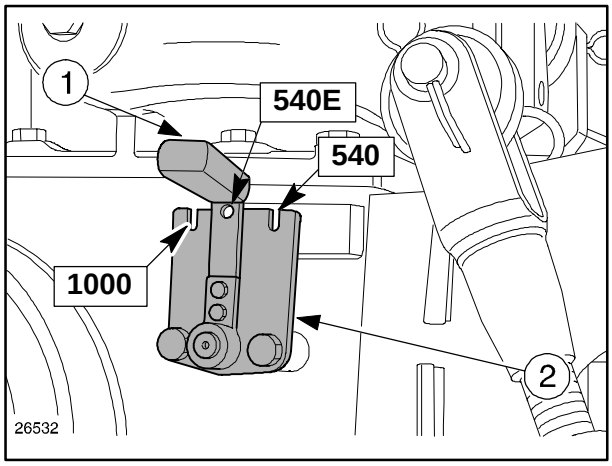

79

TWO−SPEED POWER TAKE−OFF SELECTION − Fig. 80

Selection with lever

To select power take−off speed, position lever (**1**) on sector (**2**) at the selected speed, securing the lever (**1**) in the respective groove.
With the lever (**1**) in the central position **A**, the power take−off output shaft does not rotate.

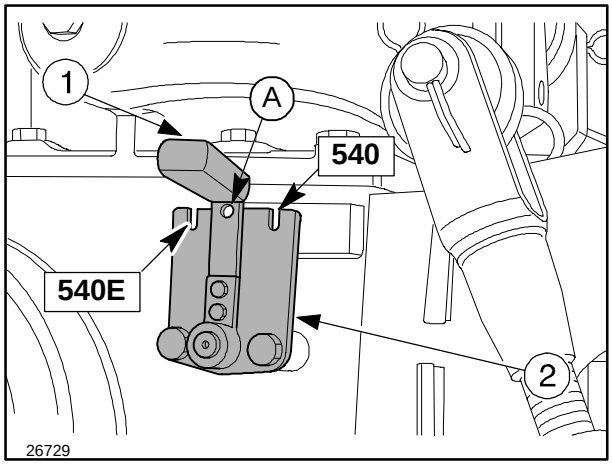

80

FRONT PTO

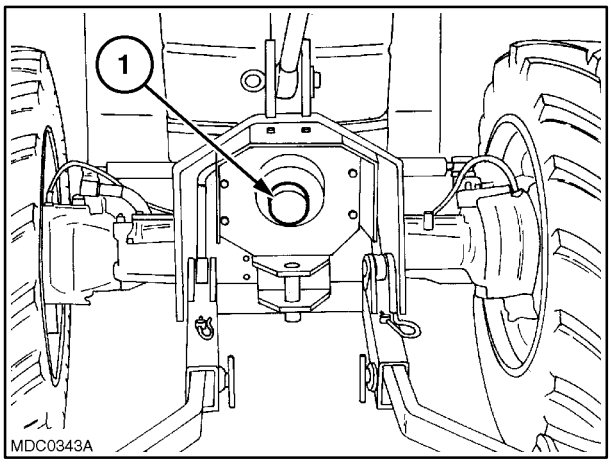

81

GENERAL INSTRUCTIONS

When the power take−off is not in use, always fit the safety cover (**1**) fig. 81 on the splined output shaft.

CAUTION

Before operating an implement driven by the power take−off, check that the safety clutch on the implement transmission shaft functions correctly, i.e.: it slips when overloaded.

CAUTION

Never operate the implement connected to the power take−off at a higher speed than specified.

DANGER

Always make sure that the drive shaft plastic guards are in perfect condition.

DANGER

Always switch the engine off before starting work on an implement connected to the power take−off.

CAUTION

When the power take−off is not in use or when, with an implement connected, the tractor is left unattended, disengage the PTO using the knob, fig. 81.

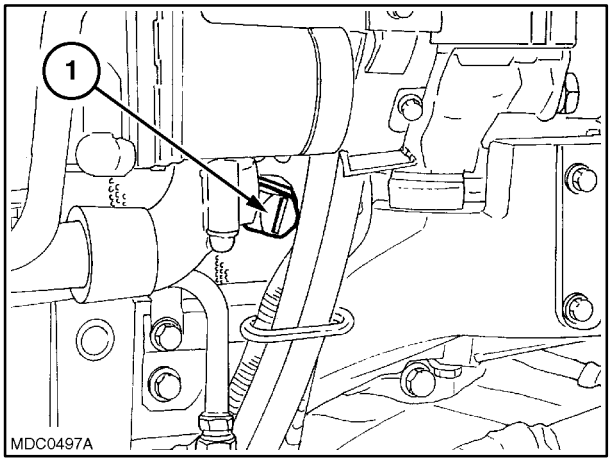

82

PTO drive transmission coupling

WARNING

*When the front power take−off is not in use, in order to ensure longer working life for the coupling and the electromagnetic clutch, select the neutral position by turning the screw (**1**) in fig. 82 counter−clockwise.*

OPERATION

Front PTO operation is commanded by the same control unit that controls the 4WD and electro−hydraulic clutch.

With the engine at 1100 rpm, the PTO reaches **540 rpm**.

When the engine is switched on with pushbutton (**2**) ON, indicator light (**1**) fig. 84 flashes to tell the operator to release the button. If the engine switches off with the PTO engaged, an indicator light (**1**) fig. 84 tells the operator to deactivate the command.

CONTROLS

To engage the PTO, press the button (**1**) in fig. 83 and pull the knob (**2**) fig. 83 upwards. Engagement is controlled by an electromagnetic clutch. PTO engagement is shown by the illumination of indicator (**1**) fig. 84 (non−flashing). To disengage, press the same knob (**2**) fig. 83 downwards.

FAULT CODES TRANSMISSION

If there is an electrical fault on the PTO, the control unit sends a signal to the indicator (**1**) fig. 84. The type of flashing mode identifies the fault code corresponding to the problem in question.

CAUTION

*In the event of slipping because of torque peaks, as a result of the implement jamming or particularly heavy ground, the control unit automatically disengages the coupling by means of sensor inside the clutch. Disengagement takes place when the sensor reads a difference of three revs in 5 seconds between the driving and driven shaft. Under these conditions the indicator (**1**) fig. 84 flashes slowly to indicate coupling disengagement. To re−engage the PTO, press the knob (**2**) fig. 83 fully down to disengage the clutch, and then pull the knob upwards to re−engage.*

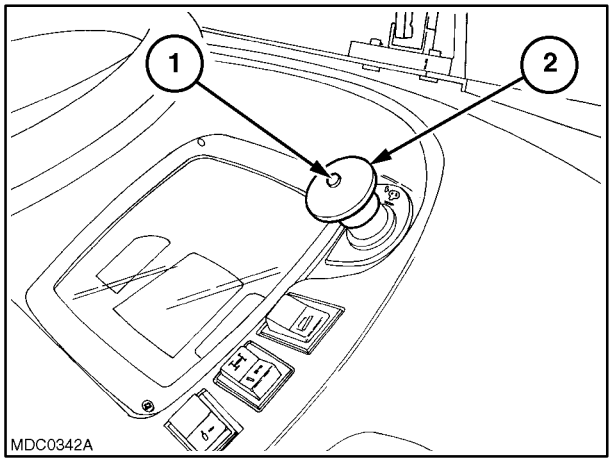

83

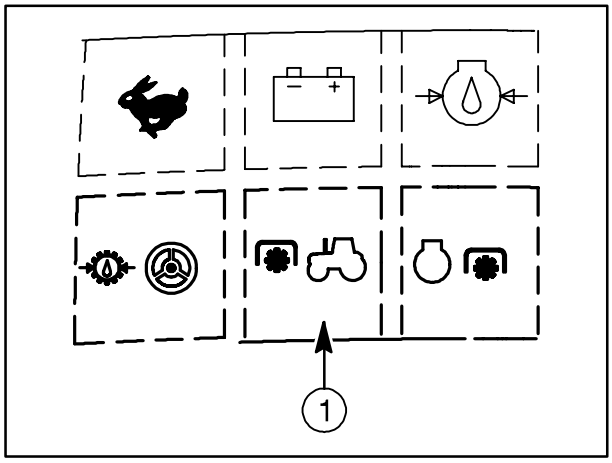

84

NOTE: *When a fault occurs, shown by the indicator (**1**) fig. 84 flashing, the system is disabled.*
To return to normal operation the fault must be eliminated.

NOTE: *For safety reasons, and to avoid pointless skidding, engagement cannot be carried out when the engine exceeds 1500 rpm. If PTO engagement is unintentionally attempted with the engine exceeding 1500 rpm, the indicator (**1**) fig. 84 flashes quickly to tell the operator to reduce engine speed.*

PTO ENGAGEMENT SYSTEM FAULT CODES

CODE	DESCRIPTION	POSSIBLE CAUSE
11	Fuse F9	F9 fuse circuit open) Pin N° 35 on control unit disconnected
15	PTO engagement circuit	Short circuit on solenoid valve + terminal Check solenoid valve terminals
16	PTO engagement circuit	Short circuit on solenoid valve to ground Solenoid valve terminals disconnected Check wiring
17	PTO engagement solenoid valve	Short circuit on solenoid valve terminals
18	Control unit power supply too low	Battery and/or alternator faulty
19	Control unit power supply too high	Double starting Battery and/or alternator faulty
29	No engine revs	Alternator fault Pin N° 5 disconnected
32	PTO engagement electromagnetic clutch disabled because of high voltage	Short circuit Pin N° 4 at + on control unit Clutch coil fault Wiring problems
37	PTO system disabled	Contact your dealer
38	PTO system disabled	Contact your dealer
49	PTO system disabled	PTO circuit terminals open Check wiring

FAULT CODES INDICATION

If an electrical or electronic fault occurs, indicator (**1**) fig. 85 will illuminate to signal the fault.

The indicator light (**1**) identifies the fault code in six phases:

3. 5 flashes in rapid succession to indicate imminent transmission of the fault code;

4. 2 second pause;

5. n... flashes to indicate the first figure of the fault code;

6. 1 second pause;

7. n... flashes to indicate the second figure of the error code;

8. 3 second pause.

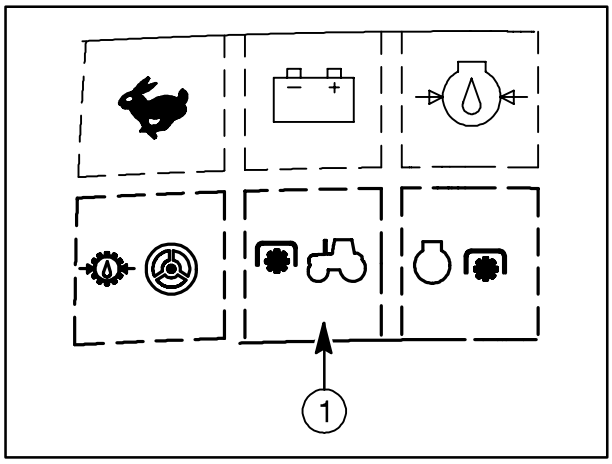

85

− EXAMPLE OF THE INTERPRETATION OF ERROR CODE NUMBER 33 −

1^ phase	2^ phase	3^ phase	4^ phase	5^ phase	6^ phase
●●●●●	pause	●●●	pause	●●●	pause
warning transmission code	2s	first figure 3	1s	second figure 3	3s
		fault code composition 33			

1

CAUTION

The system indicates eventual fault codes according to the degree of gravity.
If an error occurs that disables the automatic four−wheel drive mode, this fault code will take priority over the indication of other codes, which will be stored in the system.
Once the fault has been repaired, the system will then display any other fault codes that are active.

CAUTION

If a fault is signalled but the tractor continues to operate normally, contact your New Holland dealer to have the tractor checked if necessary.

FRONT HYDRAULIC LIFT ELECTRONICALLY OPERATED

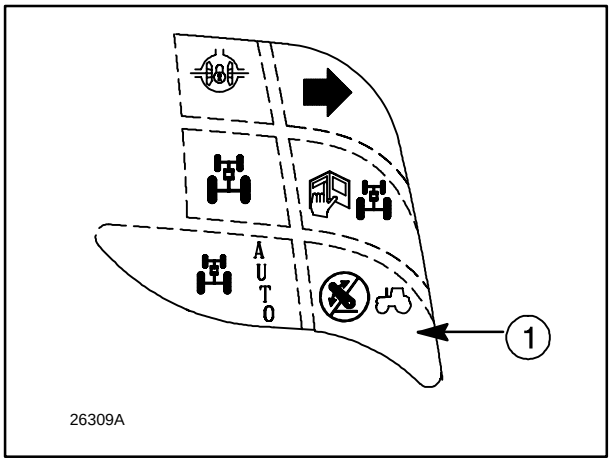

86

INTRODUCTION

Front lift operation is commanded by the same control unit that controls the rear lift.

When starting the tractor, for safety reasons, the front lift controls are disabled. This is shown by the illumination of the indicator (**1**) fig. 86.

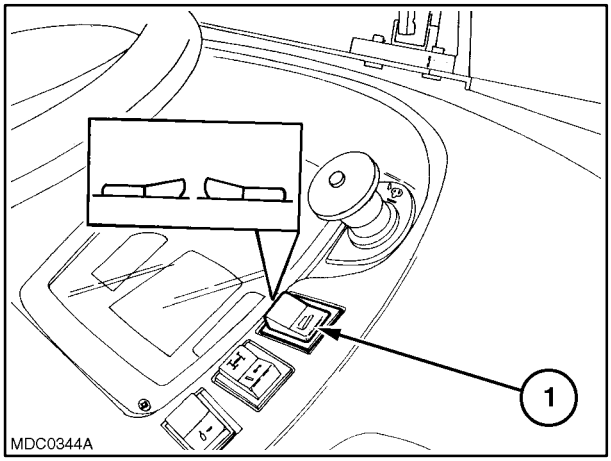

87

ENABLING THE CONTROLS

To enable the controls, proceed as follows:

- with the engine running, check that the alternator recharging light is OFF;
- press switch (**1**) fig. 87 first to raising position **B** and then to lowering position **A**;
- turn the working position potentiometer (**1**) fig. 88 clockwise, then counter−clockwise, until the indicator (**1**) fig. 86 switches off.

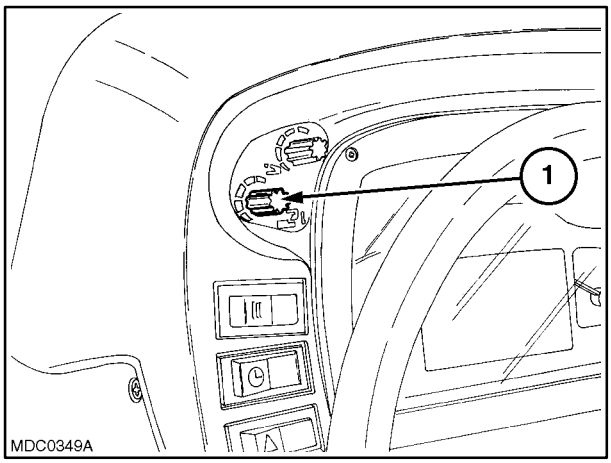

88

FAULT CODES TRANSMISSION

If there is a fault on the lift, as a result of sensors/actuators malfunction, the control unit sends a signal to the indicator (**1**) fig. 86.
The type of flashing mode identifies the fault code corresponding to the problem in question (see page 2−102).

LIFT OPERATION

COMMANDS

On the left−hand side of the dashboard there are two potentiometers (**1** e **2**) fig. 89 which stabilize the lifting limit and working position.

The switch (**1**) fig. 90 which raises and lowers the implement, is located on the right−hand side.

Adjustments

Fig. 89

1. Travel adjustment knob UP;

− turn knob (**1**) fully clockwise to raise the lift arms to the upper travel limit;

− turn knob (**1**) counter−clockwise to gradually reduce the upward travel, until it is totally eliminated.

2. Working position adjustment knob;

− turn knob (**2**) fully clockwise, to set the minimum working depth;

− turn knob (**2**) counter−clockwise, to gradually increase the working depth.

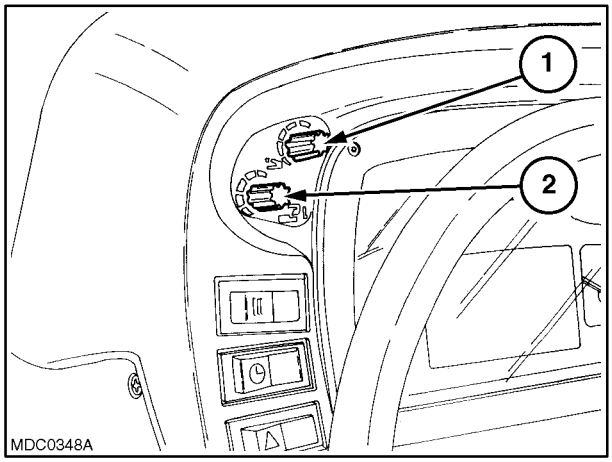

89

Fig. 90

1. Raise/lower switch

To raise and lower the implement, use switch (**1**) which has two positions:

− lower (position **A**);

− raise (position **B**).

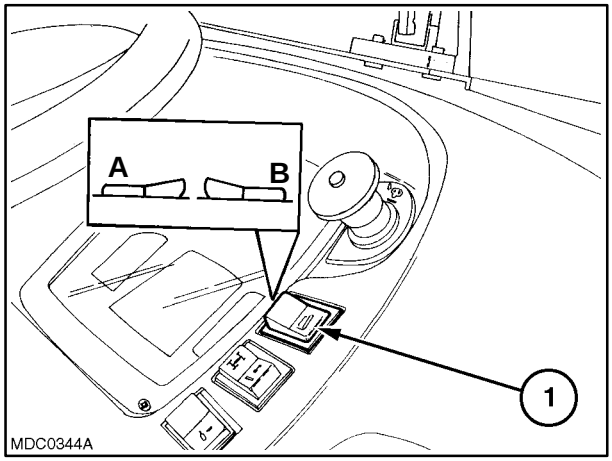

90

LIFTING ARMS TRAVEL CALIBRATION

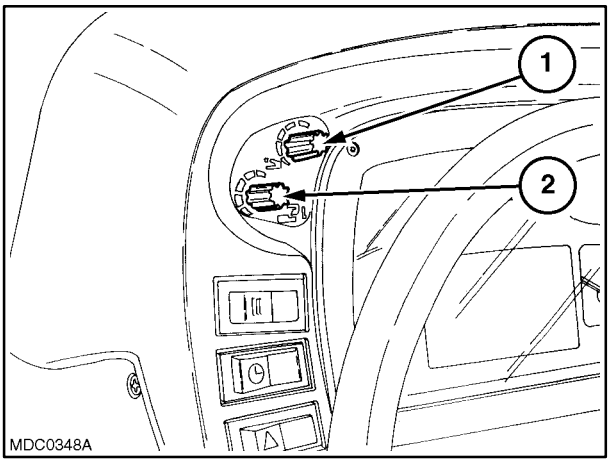

91

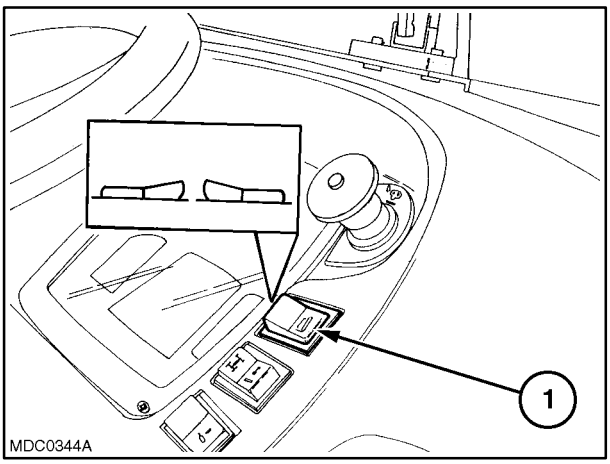

92

CALIBRATION PROCEDURE

Lift arm travel calibration is necessary under the following conditions:

1. when the alarm lamp (**1**) fig. 86 shows fault code **55**;
2. when replacing the lift arms potentiometer;
3. when replacing one or both setting potentiometers;
4. if the non−volatile memory is deleted (menu H8).

NOTE: *Operations **2**, **3** and **4**, must be carried out by authorised **NEW HOLLAND** personnel.*

CALIBRATION

To calibrate the lift arms, proceed as follows:

1. apply a weight of approx. 100 kg to the lift arms;
2. make sure that the starter key switch is extracted;
3. turn the potentiometer (**1**) fig. 91 fully clockwise;
4. turn the potentiometer (**2**) fig. 91 fully counter−clockwise;
5. press switch (**1**) fig. 92 to lowering position **A**;
6. start the engine and bring to **1300** rpm. The lamp (**1**) fig. 86 should show fault code **55**;
7. press switch (**1**) fig. 92 to raising position **B** and then to lowering position **A**;
8. turn the potentiometer (**2**) fig. 91 fully clockwise, and wait until the lift arms reach the upper travel limit;
9. turn potentiometer (**2**) fig. 91 fully counter−clockwise, and wait until the lift arms reach the lower travel limit;
10. stop the engine to memorise the data in the control unit.

NOTE: *If the fault is not **55**, find the cause by consulting the fault codes table and eliminate the problem. Only at this point can calibration be carried out.*

NOTE: *The control unit will be forced if calibration is attempted under the following conditions:*
*with the key switch inserted and turned to the first position, disconnect one or both of the potentiometers (**1** and **2**) fig. 91 extract the key and reconnect the potentiometers. when switched on, if the controls are in the correct position, the lamp (**1**) fig. 86 will show code **55**. Calibration can now be carried out.*

FAULT CODES INDICATION

Any eventual electrical or electronic anomalies that are detected will be indicated by the illuminated signal (**1**) fig. 93 located near the lower arms up/down adjustment knob.

The indicator light (**1**) fig. 93 identifies the fault code in six phases:

1. 5 flashes in rapid succession to indicate imminent transmission of the fault code;

2. 2 second pause;

3. n... flashes to indicate the first figure of the error code;

4. 1 second pause;

5. n... flashes to indicate the second figure of the error code;

6. 3 second pause.

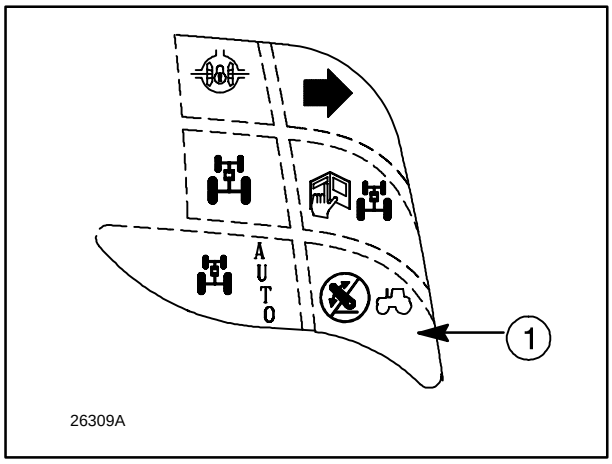

93

− Example of the interpretation of fault code number 52 −

1^ phase	2^ phase	3^ phase	4^ phase	5^ phase	6^ phase
●●●●●	pause	●●●●●	pause	●●	pause
warning transmission code	2s	first figure 5	1s	second figure 2	3s
		fault code composition 52			

2

CAUTION

The system indicates eventual fault codes according to the degree of gravity.
If an error occurs that compromises system operation, this fault code will take priority over the indication of other codes, which will be stored in the system.
Once the fault has been repaired, the system will then display any other fault codes that are active.

CAUTION

If a fault is signalled but the tractor continues to operate normally, contact your New Holland dealer to have the tractor checked if necessary.

MECHANICALLY CONTROLLED HYDRAULIC LIFT

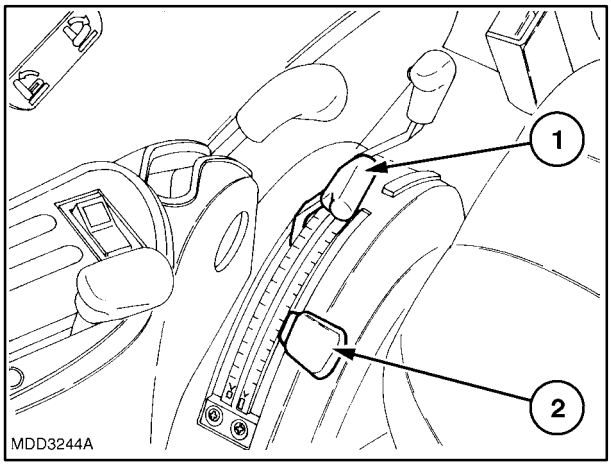

94

The hydraulic lift system uses the transmission oil which is supplied by a gear pump driven by the engine timing gears.

The lift, which can sense the forces on the lower arms via a torsion bar, enables the following operations to be performed:

— position control;

— draft control;

— float;

— mixed position and draft control.

By combined use of levers (**1**) and (**2**) fig. 94, the most suitable type of operation for the job in hand can be selected.

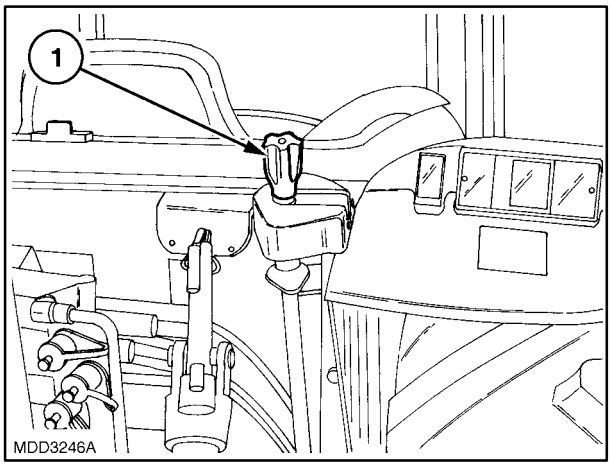

95

Hydraulic lift ground control lever − Fig. 95

Extract the lever and turn to the right to raise the arms or to the left to lower.

DANGER: *When operating lever (**1**) make sure that there is nobody (including the operator) within the range of action of the implement mounted on the lift.*

LIFT−O−MATIC. Control button for fully raising and lowering the lift arms.

1. Raise pushbutton.

2. Lower pushbutton.

To lower the implement, press the button (**2**) fig. 96 fully down, the lift arms will lower to the limit pre−set by means of the position lever (**2**) fig. 94.

To raise the implement, press the button (**1**) fig. 96 backwards, as shown by the arrow in the drawing, in order to release the button (**2**) fig. 96.

The lift arms will raise to the limit pre−set by means of the height limiting device position lever (see page 2−105).

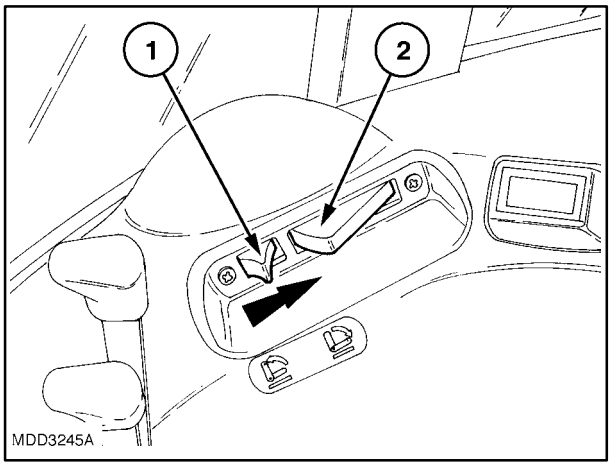

96

CAUTION: *When working with mounted implements connected to the power take−off that use the Lift−O−Matic, adjust the height limit of the lift arm extension (see page 2−105) in order to avoid damaging the transmission shaft.*

ARMS DESCENT SPEED ADJUSTMENT − Fig. 86

If necessary, the arms descent speed can be varied, as follows:

— loosen the locknut (**1**), and loosen screw (**2**) to increase the arms descent speed;
— loosen the locknut (**1**) and tighten screw (**2**) to reduce the arms descent speed;
— on termination of adjustment operations, re−tighten the locknut (**1**).

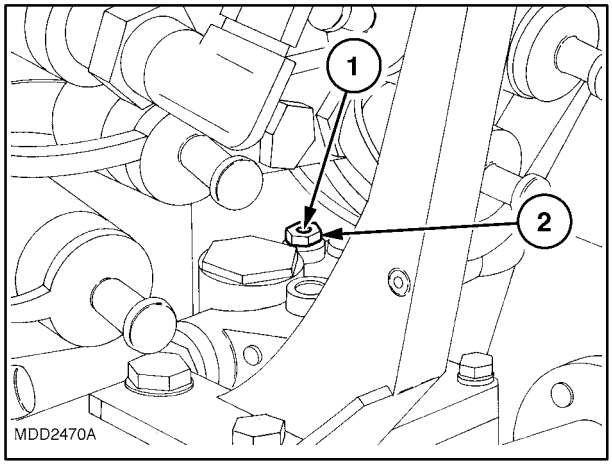

97

POSITION CONTROL

— Move the draft control lever (**2**) fig. 98 fully forward;
— set the position of the implement, either in or above the ground surface, move the lever (**1**) fig. 98 forward to lower the implement and backward to raise it. The movement of the implement will be proportional to the movement of the lever;
— push the button (**1**) fig. 99 in the direction of the arrow to raise the implement at the headland and fully press down the Lift−O−Matic button (**2**) fig. 99 to lower the implement when re−starting work or when necessary, without using the lift control levers.

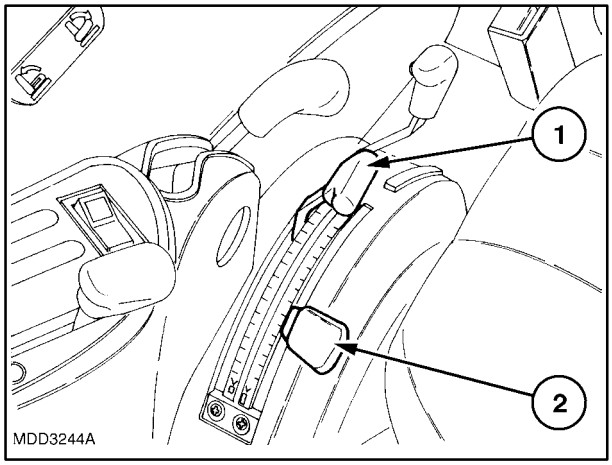

98

DRAFT CONTROL

— Move the position control lever (**1**) fig. 98 fully forward;
— set the desired implement depth by gradually moving the draft control lever (**2**) fig. 98. The depth reached by the implement is proportional to the traction power which, in turn, is determined by the consistency of the ground. In these conditions, the lift will automatically maintain the traction power required from the tractor at a constant level;
— push the button (**1**) fig. 99 in the direction of the arrow to raise the implement at the headland and fully press down the Lift−O−Matic button (**2**) fig. 99 to lower the implement when re−starting work or when necessary, without using the lift control levers.

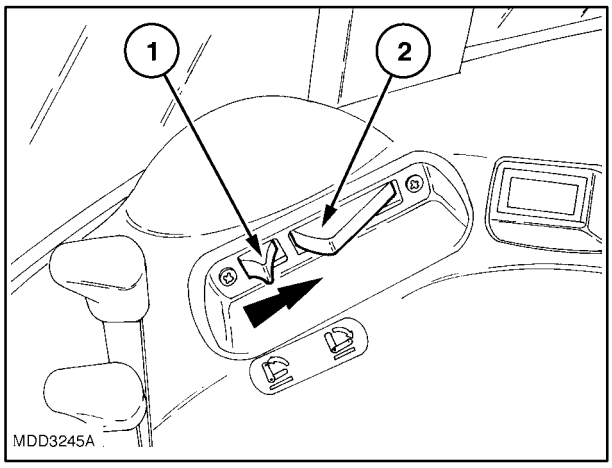

99

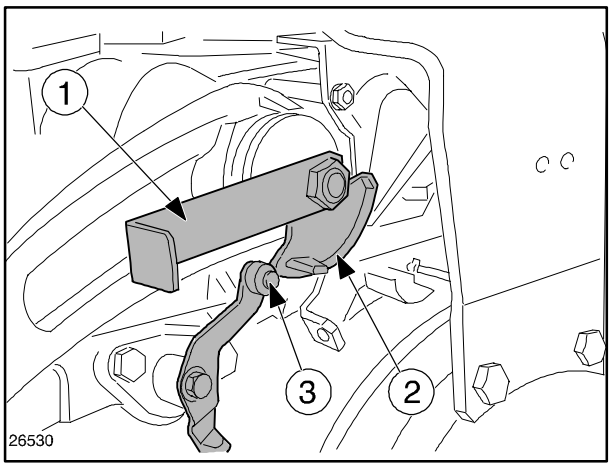

100

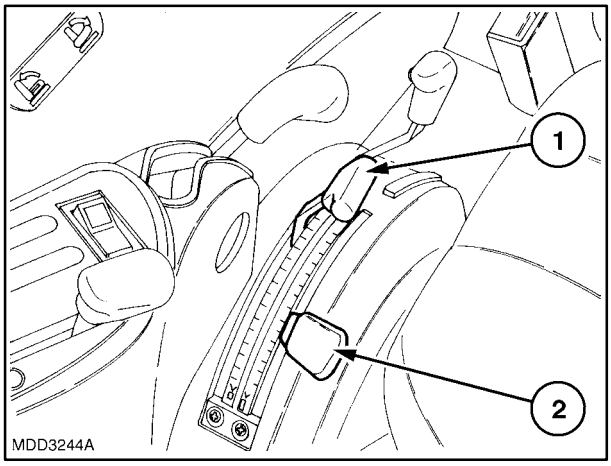

101

FLOAT MODE

— To operate the lift in float mode, i.e.: with free arm movement for the full length of travel, move both levers (**1**) and (**2**) fig. 101 fully forward;

— the lift should only be used to lower and raise the implement at the headland; to carry out this operation, use only buttons (**1**) and (**2**) fig. 99 as described on page 2−104.

LIFT ARM HEIGHT LIMIT ADJUSTMENT − Fig. 100

Adjust the height limit of lift arm travel as follows:

1. hitch the implement to the lift arm link ends;

2. bring engine speed to 1200 ÷ to 1500 rpm;

3. press the Lift−O−Matic button (**2**) fig. 99 to the fully lowered position;

4. move levers (**1**) and (**2**) fig. 101 fully forward;

5. using the position control lever (**1**) fig. 101, raise the implement to the desired height;

6. **switch off the engine**;

7. move the locking lever (**1**) downwards and rotate the sector (**2**) until it touches the roller (**3**);

8. on termination of adjustment operations, lock the sector (**2**) in fig. 100 in position by moving the locking lever upwards (**1**) fig. 100.

DANGER: *Height limit adjustment should never be carried out using lever* (**1**) *fig. 100. If the position is incorrect, repeat operations **1** to **8** as described above. The use of lever* (**1**) *fig. 100 when the engine is running is strictly prohibited.*

NOTE: *The height limit of lift arm is automatically excluded when, in order to raise the lift, the lift control levers (**1**) and (**2**) fig. 101 are used.*

MIXED POSITION AND DRAFT CONTROL

— Set the desired implement depth in the same manner as described for draft control;

— when the implement is at the required depth, gradually move the position control lever (**1**) fig. 101, backwards, until the lift arms begin to raise.
The lift operates in draft control but, at the same time, prevents the implement from going too deep if less ground resistance is encountered, which could result in unsuitable soil being brought to the surface;

— to raise and lower the implement at the headland, use only buttons (**1**) and (**2**) fig. 99.

NOTE: *Do not use levers* (**1**) *and* (**2**) fig. 101 *to raise and lower implements, as this will change the previously set operating conditions. Exclusively use the Lift−O−Matic controls (**1**) and (**2**) fig. 99.*

ELECTRONICALLY CONTROLLED HYDRAULIC LIFT

INTRODUCTION

The electronically controlled hydraulic lift offers considerable advantages over conventional mechanical systems because of its high precision, sensitivity and the use of a microprocessor.

The electronic control system provides three different work modes:

- position control;
- draft control;
- float mode.

Unlike a conventional hydraulic lift, which is fitted with complicated lever mechanisms, the electronically controlled hydraulic lift is equipped with electronic sensors that transmit variations in conditions to the electronic control unit, which hydraulically operates the lift arms.

WORKING SAFELY

- Before operating the control unit controls, make sure that they are adjusted to the desired settings.
- Never leave the implement in the raised position when the tractor is stationary.
- With the tractor stationary and the engine running, the external controls located on the mudguards remain enabled.
  Take **care** not to operate the controls inadvertently.
- The control unit is provided with a self−testing system, signalling if there are any faults in the control system. To identify possible faults, see page 2−114.

CAUTION: *To avoid damaging the electronic components, follow the instructions noted below when carrying out arc welding on tractors fitted with electronic lifts or on connected implements.*

- When possible, disconnect the implement or the part that needs welding from the tractor.
- Disconnect the two battery cables from the terminals.
- Connect the welding machine ground clamp as close as possible to the area where welding is to take place.
- If welding is to be carried out within **39.37 inch. (1 meter)** of the control unit, the unit must first be removed.
- Whilst welding, make sure that the cables do not pass above or near electrical or electronic leads.

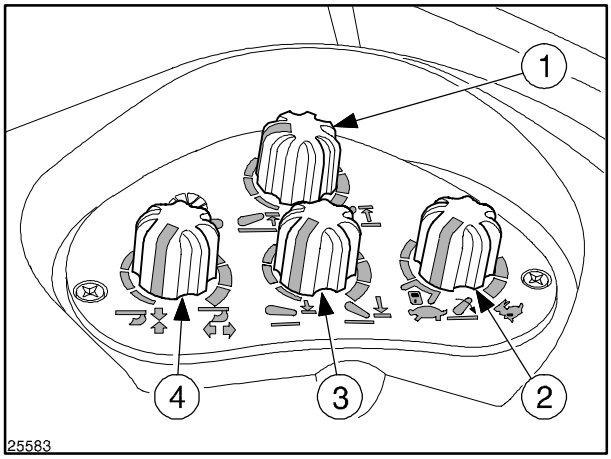

102

INTERNAL CONTROLS

The setting controls for the electronic lift unit are located to the right of the operator position (see page 1−10) and consist of four knobs:

Lift controls − Fig. 102

1 − Upper travel limit adjustment control:

- rotate the knob clockwise for maximum upward lift arm travel;
- rotate the knob counter−clockwise for minimum upward lift arm travel.

NOTE: *With the lift arm descent speed adjustment knob (**2**) fig. 102 turned fully counter−clockwise, so that it is aligned near the lock symbol, the lift will remain locked in the position it holds at that moment, regardless of whether it was moving or not. In this condition the implement can be raised but not lowered. By turning the knob clockwise towards the hare symbol, the lift arm descent speed will be progressively increased.*

2 − Lift arm descent speed adjustment control:

- rotate the knob clockwise for maximum lift arm descent speed;
- rotate the knob counter−clockwise to the left for minimum lift arm descent speed.

NOTE: *When the lift is working, the descent speed is adjusted by means of the descent speed knob (**2**) fig. 102.*

3 − Lower travel limit adjustment control:

- rotate the knob clockwise for maximum downward lift arm travel;
- rotate the knob counter−clockwise for minimum downward lift arm travel.

CAUTION: *During road transport, turn the lift arm descent speed adjustment knob (**2**) fig. 102 fully counter−clockwise towards the tortoise symbol and switch the up/down push button to the UP position **A** fig. 104. The indicator lamp (**3**) fig. 103 will begin to flash to signal transport mode. By operating controls (**2**) fig. 102 and (**2**) fig. 104 the lift will be disabled and will need to be reset, following the procedure described on page 2−108.*

4 − Position/draft sensitivity control:

- adjusts the sensitivity of position/draft work.
  Turning the knob counter−clockwise gradually reduces the extent and frequency of corrective interventions in relation to variations in resistance of the ground to movement of the implement.
  With the knob turned fully counter−clockwise, the lift unit operates in position control mode only.

Lower arms up/down control knob − Fig. 103

The up/down movement of the arms is controlled by knob (**2**).
Rotate the knob clockwise to raise and counter−clockwise to lower.

To the left of the up/down control (**2**) there are two indicator lights:

1 − indicates a fault (see page 2−85).

3 − indicates that the lift is momentarily disabled, i.e.: the position of the knob (**2**) does not correspond to the position of the lowered arms, therefore the implement may neither be raised or lowered. The external controls can be used to vary the position of the implement.

"Lift arm resetting procedure"

To re−synchronise the knob with the arms, make sure that (with the engine running) the fast up/down switch (**2**) fig. 104 is in position **B**. Turn the knob (**2**) fig. 103 fully clockwise (raise), then slowly turn counter clockwise (lower) until the indicator (**3**) fig. 103 switches off; the movements of the knob (**2**) fig. 103 will now correspond to the movement of the lower arms.

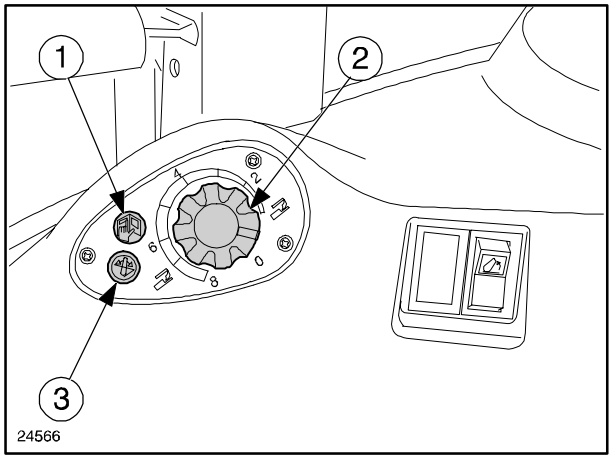

103

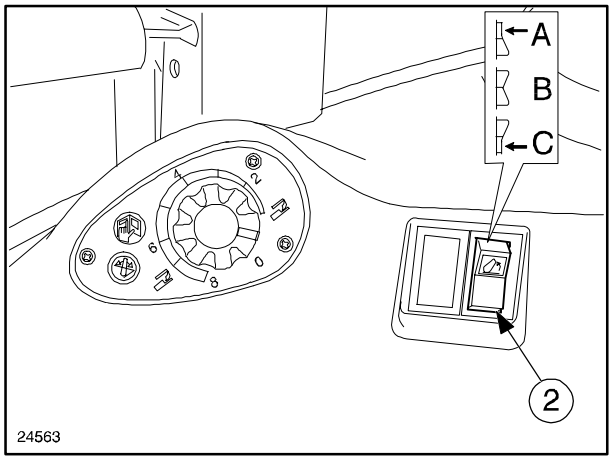

104

Fast up/down push button − Fig. 104

To raise and lower the implement, use button (**2**) which has three positions:

- up (position **A**);
- work (position **B**);
- rapid ground entry (position **C**).

Position **C** should be used at each headland to increase the speed with which the implement enters the ground; when released the button will automatically return to work position **B**.

NOTE: *By pressing button (**2**) fig. 104 to the UP position, the differential lock (if selected) will automatically disengage; if the button is pressed to the work position, the differential lock will engage.*

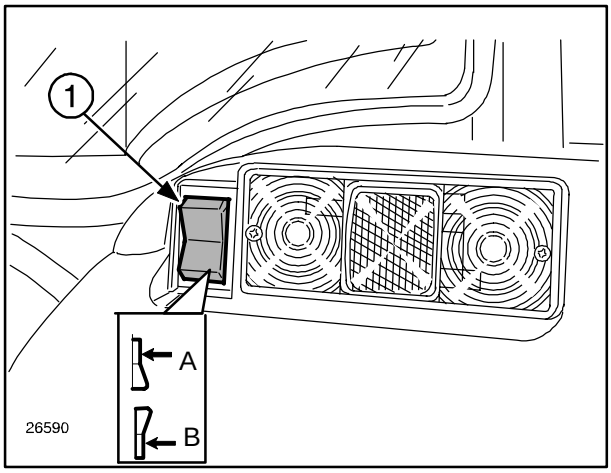

105

EXTERNAL CONTROLS

Up/down push buttons − Fig. 105

The external lift controls (**1**) are located at the rear of the tractor on both sides next to the tail lights.

To enable the controls, switch the control buttons (**1**) to either of the positions.

Switch to position **A** to raise, and position **B** to lower.

When using the external controls for the hydraulic lift, all the central unit controls located in the cab are automatically disabled (see page 2−107).
To re−enable the cab controls, follow the procedure described on page 2−108 under the heading “Resetting”.

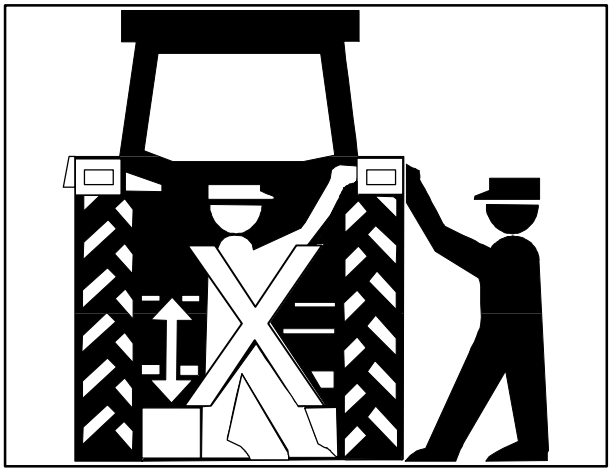

106

CAUTION**:** *Always stand to the side of the tractor when operating the external up/down controls, as shown in fig. 106.*

USING THE LIFT

NOTE: *If the indicator light (**1**) fig. 107 is illuminated, the internal lift controls have been disabled by the use of the external controls on the mudguards, or that errors have occurred that have disabled the lift. To re−enable the internal lift controls, proceed as described on page 2−108 under the "Resetting" heading.*
When the control unit has been "reset", the indicator light will switch off.

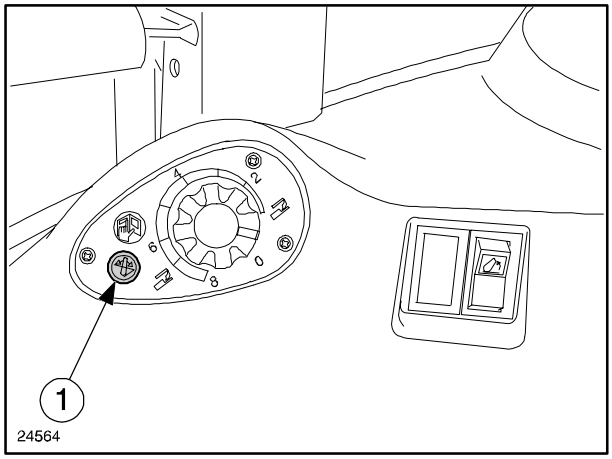

107

NOTE: *Before starting operations, adjust the upper and lower travel limits, and the lift arm descent speed knobs (see page 2−107) to the most suitable position for the job in hand.*

CAUTION: *When setting the implement for the first time, keep the lower lift arms descent speed in the slow lowering position to prevent damaging the implement or causing injury.*

NOTE: *If the position selected by means of knob (**1**) fig. 103 requires a range of movement outside of the limits set with the up/down limit control knobs (**1**) and (**2**) fig. 102 lower arm travel will stop at the set limits.*

NOTE: *If the lift arm descent speed adjustment knob is turned fully counter−clockwise, aligned with the lock symbol, the arms will be locked in the position they are in at that moment, preventing the arms from lowering. If push button (**2**) fig. 104 is in position **A**, the external controls will also be disabled.*
Set the most suitable descent speed for your requirements.

Position control

To operate in position control mode, turn the knob (**4**) fig. 102 fully counter−clockwise and set the working depth using the lower arms up/down control knob (**1**) fig. 108, rotating clockwise to raise and counter−clockwise to lower.

To raise and lower the implement, use the fast up/down switch (**2**) fig. 108; in the lifting phase the implement will stop at the height previously set by means of the upper travel limit control (**1**) (see page 2−107), whereas when lowering the implement will return to the previously set working position, within the lower travel limit (**3**) fig. 102.

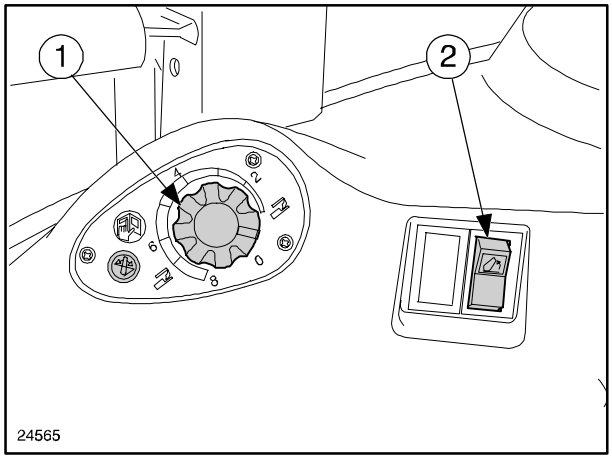

108

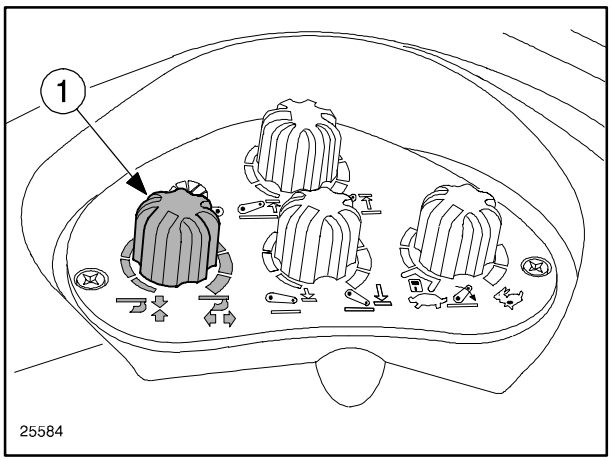

109

NOTE: *If the position selected by means of knob (**1**) fig. 110 requires a range of movement outside of the limits set with the up/down limit control knobs (**1**) and (**3**) fig. 102 lower arm travel will stop at the set limits.*

NOTE: *Each time an implement setting operation is carried out, the lift will automatically adjust the working depth of the implement according to ground conditions.*

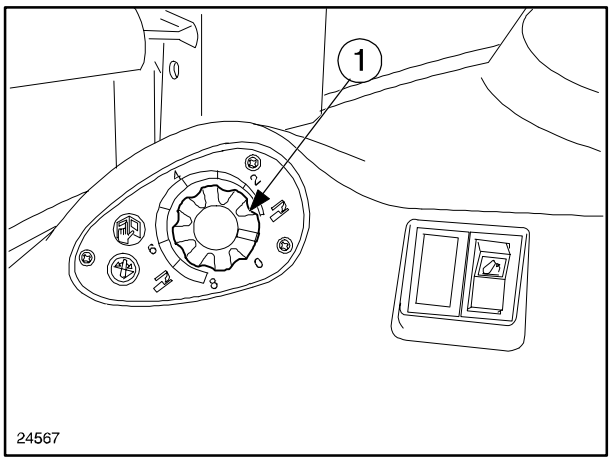

110

Draft control

To work in draft control mode, adjust the position/draft sensitivity knob (**1**) fig. 109 to an intermediate position, bearing in mind that by turning the knob clockwise the frequency and extent of corrective interventions caused by tractor draft variations on the implement will increase.

With the knob (**1**) fig. 109 turned fully clockwise (completely to the right, the decal shows two horizontal arrows pointing in opposite directions), a more sensitive adjustment will be obtained, therefore variations in ground density will result in more frequent interventions by the hydraulic system and consequent corrections in height above the ground of the lower lift arms and the connected implement.

Vice versa, by gradually turning the knob counter−clockwise (to the left, the decal shows two vertical arrows pointing towards each other) the extent and frequency of interventions will be progressively reduced.

At this point, lower the implement using the up/down control knob (**1**) fig. 110 counter−clockwise in order to determine the working depth.

To raise and lower the implement, use the fast up/down switch (**2**) fig. 108; in the lifting phase the implement will stop at the height previously set by means of the upper travel limit control (see page 2−107), whereas when lowering the implement will return to the previously set working position.

Float mode

To operate the lift in float mode, position the controls as follows:

- position control knob (**1**) fig. 110 fully counter−clockwise (maximum working depth);
- position/draft sensitivity knob (**1**) fig. 109 fully clockwise (maximum sensitivity).

LIFT SOLENOID VALVE CALIBRATION

If the lift unit shows signs of malfunctioning, carry out solenoid valve calibration operations according to the instructions listed below:

1. park the tractor in an obstacle−free area, switch off the engine and apply the handbrake, make sure that the lifting arms are not loaded;
2. remove the left−hand side panel on the dashboard;
3. find the white connector (**2**) fig. 111 and connect the calibration instrument (**1**) fig. 111;
4. turn the potentiometer knobs (**1**, **2** and **3**) fully clockwise, and potentiometer knob (**4**) fully counter−clockwise, see fig. 112;
5. keep push buttons (**2**) fig. 113 pressed down and start the engine;
6. when the instrument display shows the message **"U20"** release the button (**2**);

CAUTION: *Before starting the engine, move the shuttle lever to the neutral position and make sure that there are no people or objects in the vicinity of the tractor.*

7. bring the engine to approx. 1300 rpm;
8. rotate the knob (**1**) fig. 113 first counter−clockwise then clockwise, until the indicator (**3**) fig. 113 switches off;
9. continue to rotate the knob (**1**) fig. 113 clockwise, until the lifting arms are at a height of approx. 75%, the message **"CYCLE 1"**, will appear on the display. At this point, release the knob.

The instrument will then complete calibration operations by displaying **"CYCLE 2, CYCLE 3"**. On completion of the correct calibration procedure, the message **"RVC:END"** will appear.

NOTE: *If, during calibration operations, the instrument detects an anomaly, the display will show a numerical code, preceded by the letter **"U"**. Consult the table on page 2−113 and eliminate the fault. The instrument will now be able to proceed with calibration operations. When the message **"RVC:END"** appears on the instrument, switch off the engine in order to store the new control values.*

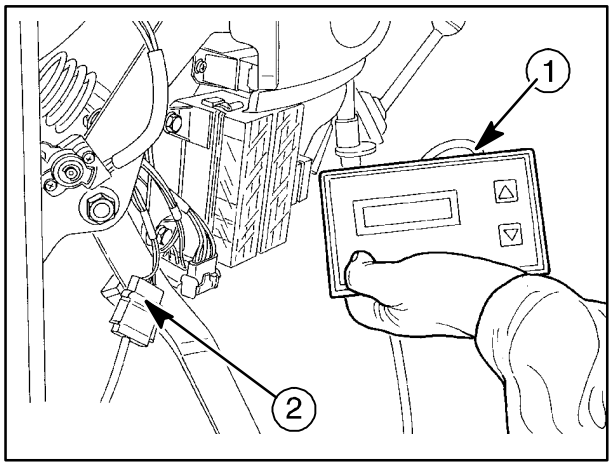

111

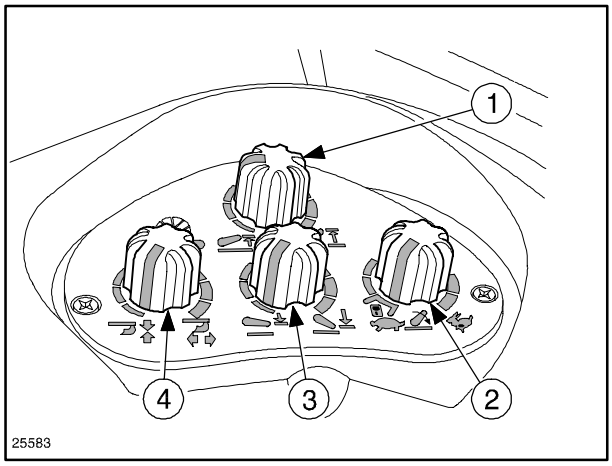

112

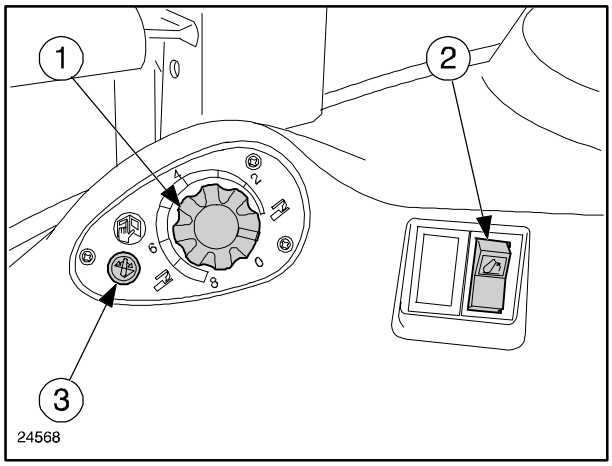

113

FAULT CODE DISPLAY

Any eventual errors stored by the electronic control unit during tractor use can be checked using the instrument. To display the codes, follow the instructions noted below;

- connect the instrument as described on page 2−112;
- keep the two brake pedals held down and the lift up/down push button in the lowered position;
- turn the starter key to the second position (ready for starting), the display (**1**), will show a numerical code (fault code).

By pressing the push button (**2**) on the instrument with the arrow pointing upwards again, any other errors detected during tractor use can be checked.

The instrument will display up to a maximum of 9 faults.

Press, and hold down, the push button (**3**) on the instrument with the arrow pointing downwards for at least 5 seconds in order to delete the data stored in the control unit. Work with the tractor, checking operation as described previously.

If the instrument shows the same errors that were previously deleted or new errors, contact NEW HOLLAND specialised personnel.

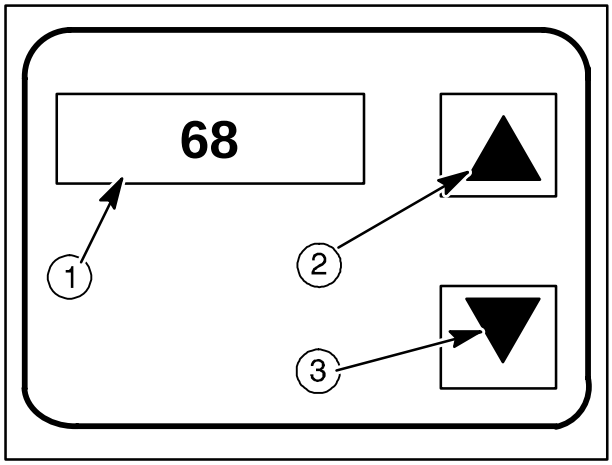

114

U.... FAULT CODES

CODE	CAUSE	SOLUTION
U 20	Implement connector too low	Turn the working depth control knob (1, fig. 52) clockwise
U 21	Implement connector too high	Turn the working depth control knob (1, fig. 52) counter−clockwise
U 22	Movement detected on working depth control	Calibration will re−start when system movement is eliminated
U 23	Arms incorrectly positioned in relation to settings	Calibration will re−start when the arms are stationary
U 24	Solenoid valve current absorption too high	Check wiring Replace the solenoid valve
U 25	Arm upper travel limit incorrectly positioned	Turn the knob fully clockwise (1, fig. 51)
U 26	Arm lower travel limit incorrectly positioned	Turn the knob fully clockwise (3, fig. 51)
U 27	Position/draft sensitivity incorrectly positioned	Turn the knob fully counter−clockwise (4, fig. 51)
U 31	Tractor moving	Apply the handbrake

Detect and correct the causes of the faults that are displayed during calibration operations. Calibration will then re−start.

FAULT CODE SIGNALS

Any eventual electrical or electronic anomalies that are detected will be indicated by the illuminated signal (**1**) fig. 115 located near the lower arms up/down adjustment knob.
If a fault occurs that prevents correct operation of the lift, the lift disabled indicator light (**2**) fig. 115, also located near the lower arm up/down adjustment knob, will illuminate.
The indicator light (**1**) fig. 115 identifies the error code in six phases:

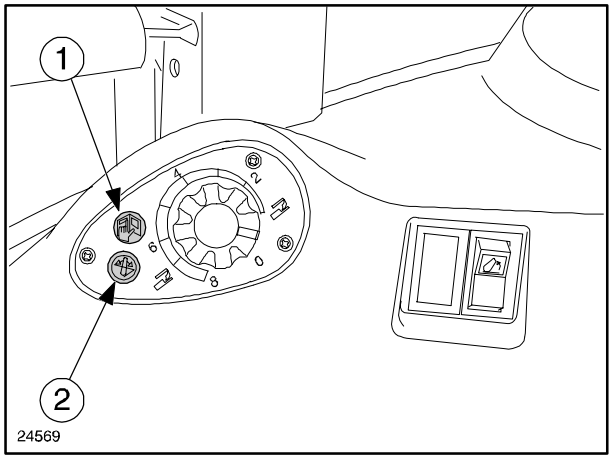

115

1) 5 flashes in rapid succession to indicate imminent transmission of the error code;

6) 2 second pause;

3) n... flashes to indicate the first figure of the error code;

4) 1 second pause;

5) n... flashes to indicate the second figure of the error code;

6) 3 second pause.

− Example of the interpretation of error code number 41 −

1^ phase	2^ phase	3^ phase	4^ phase	5^ phase	6^ phase
●●●●●	pause	●●●●	pause	●	pause
warning transmission code	2s	first figure 4	1s	second figure 1	3s
		fault code composition 41			

CAUTION: *The system indicates eventual fault codes according to the degree of gravity.*
If a fault occurs that compromises system operation, this fault code will take priority over the indication of other codes, which will be stored in the system.
Once the fault has been repaired, the system will then display any other fault codes that are active.

CAUTION: *If a fault is signalled but the tractor continues to operate normally, contact your New Holland dealer to have the tractor checked if necessary.*

FRONT THREE−POINT LINKAGE

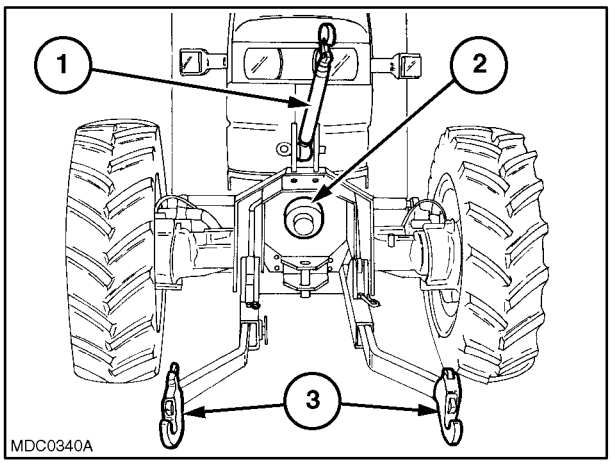

116

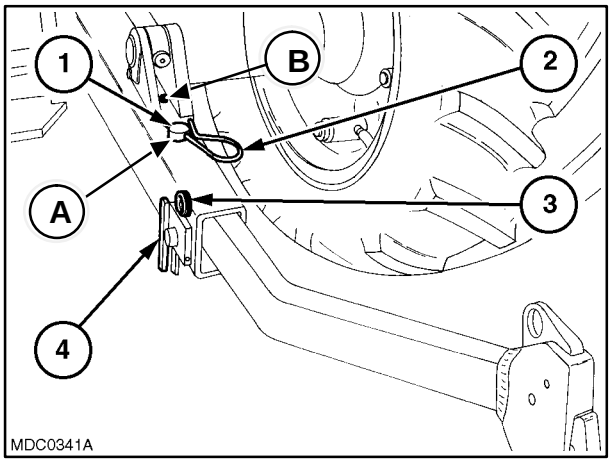

117

THREE−POINT LINKAGE − Fig. 116

1. Adjustable top link.

2. PTO shaft.

3. Lower lift arms.

HORIZONTAL ARMS − Fig. 117

The horizontal arms are fixed to the support using holes **A** and **B** in two positions. Select the most suitable holes for the implement to be used.

When using the tractor without implements mounted on the front, or when on public highways, it is advised to remove the horizontal arms.

To remove the arms proceed as follows:

− extract the safety pin (**3**);

− loosen the bolt (**4**);

− extract the safety pin (**2**);

− remove the retaining pin (**1**) and extract the arms.

NOTE: *When working with implements attached, eliminate swing by tightening the screw (**4**).*

MAXIMUM LIFT CAPACITY

With third point connected to top hole of top link attachment bracket and for the entire lifting stroke:

at link ends of horizontal arms

− arms hinged in position **A** . . . . . 2711.68 lbs. (kg 1230)

− arms hinged in position **B** . . . . . 3152.61 lbs. (kg 1430)

with centre of gravity at 610 mm from link ends

− arms hinged in position **A** . . . . . 2932.14 lbs. (kg 1330)

− arms hinged in position **B** . . . . . 3306.93 lbs. (kg 1500)

QUICK−FIT IMPLEMENT LINKAGE

Hitching the implement

Fit the conical pick−up profiles (**1**) fig. 119 on the implement hitch pins.

Move the tractor forwards and position in relation to the implement, then raise the lower arms: and the implement will be hitched automatically. The hooks (**2**) fig. 120 must lock the conical profiles (**1**) fig. 119 as illustrated in fig. 120.

If using 1ª category implements, fit the reducer bushes on the implement hitch pins.

CAUTION

Before lifting the implement, make sure that the two hook ends (**1**) fig. 120 *have engaged in the locked position.*

Release the end of the top link by pulling back the locking lever (**1**) fig. 118 and hook onto the implement.

Adjust the length of the top link by tightening or loosening the threaded sleeve.

Unhitching the implement

Rest the implement on the ground and make sure that it is stable.Release the top link by pulling back the release lever (**1**) fig. 118.
Slightly raise the implement, then release the lower hook ends by pulling the release lever (**1**) fig. 120.

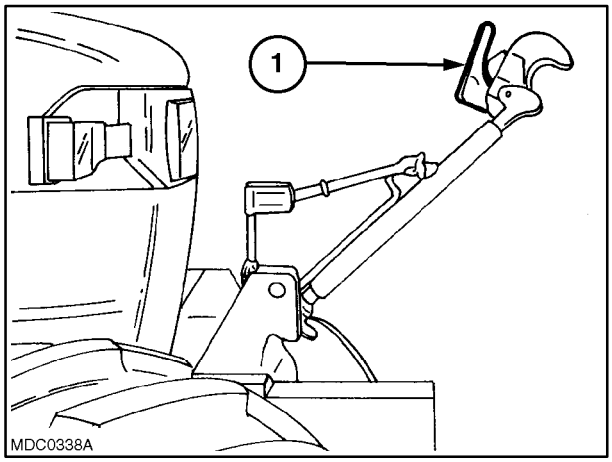

118

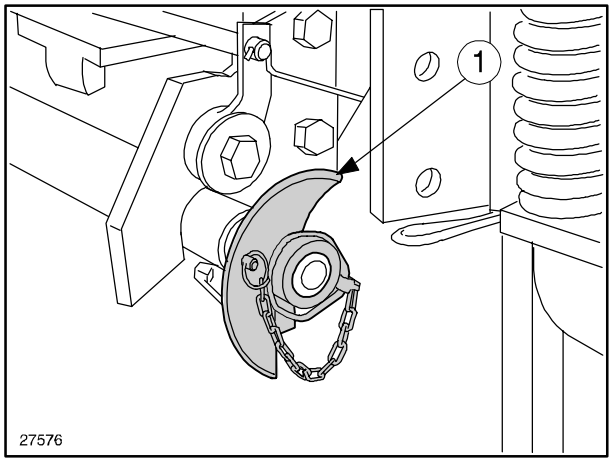

119

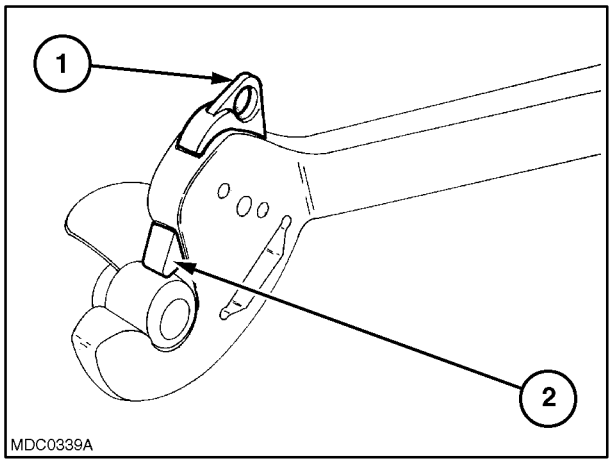

120

REAR THREE−POINT LINKAGE

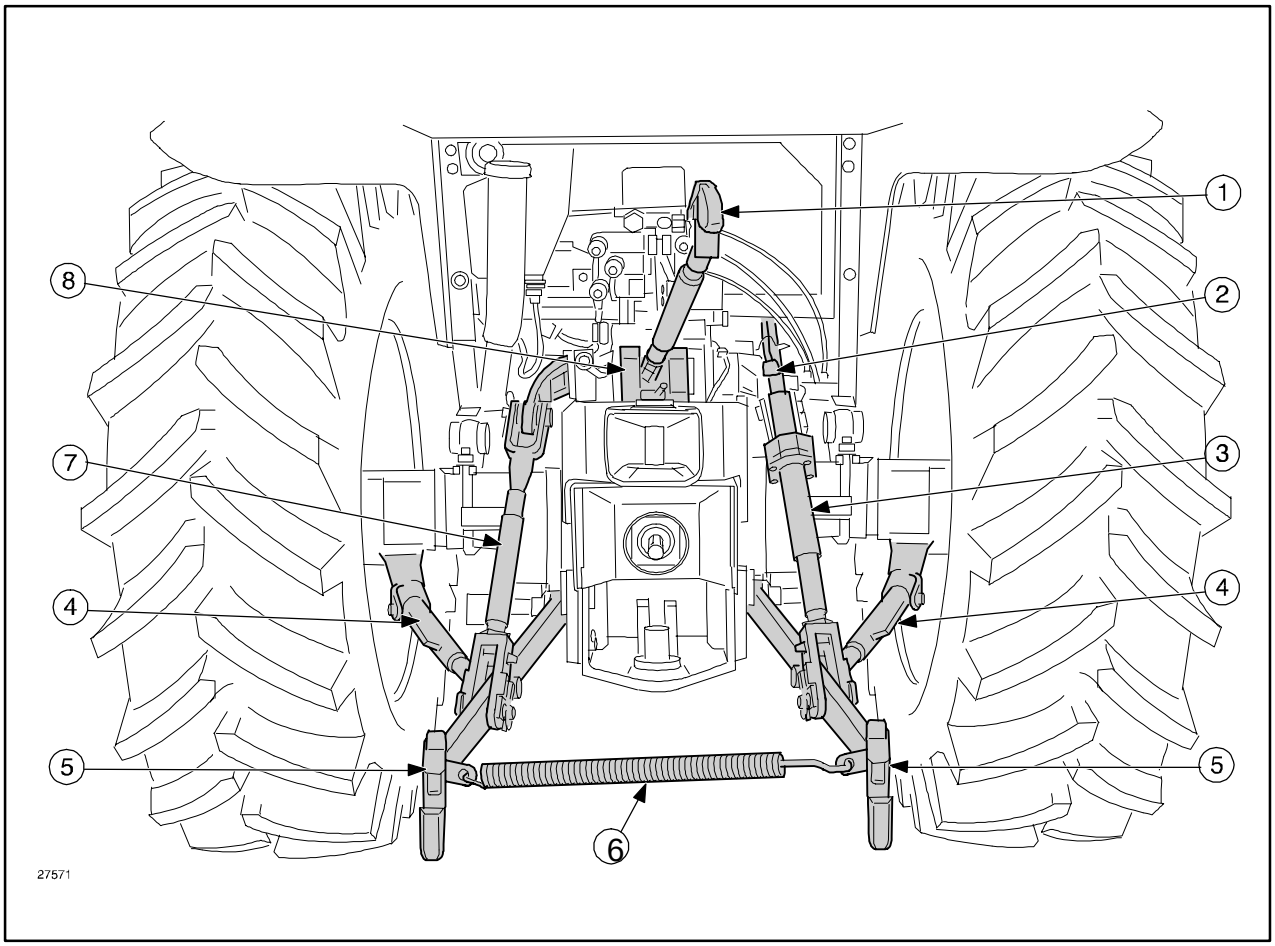

121

INTRODUCTION

Tractors are available with category I and category II linkages.

1 Adjustable length top link.

2 Right−hand lift rod adjuster.

3 Right−hand lift rod.

4 Telescopic lateral stabiliser struts.

5 Lower arms.

6 Arm spacer spring.

7 Left−hand lift rod.

8 Top link support bracket.

Adjustable top link − Fig. 122

The top link (**2**) can be connected to the support bracket by means of the two holes. Select the more suitable hole according to the implement height.
To adjust the top link length, rotate the sleeve using lever (**1**). The top link must not exceed a maximum length of 30.31 inch. (770 mm) (with standard implement linkage).

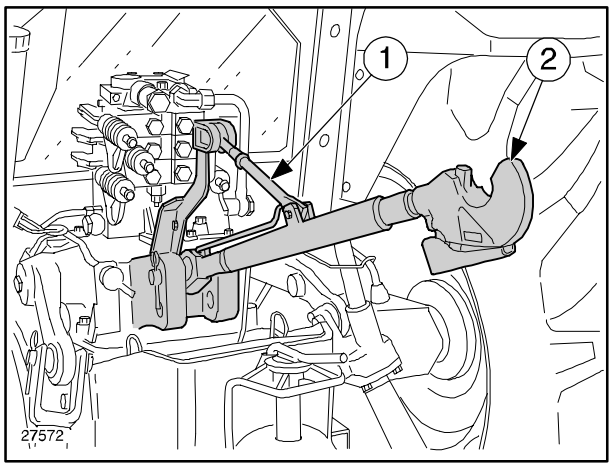

122

Standard left−hand lift rod − Fig. 123

Adjust the length of the lift rod by removing the pin (**2**) and screwing the lower end (**1**) in or out. Adjust the length of the lift rod as necessary to set the implement in its working position parallel to the ground.

NOTE: *When using the tractor without implements, always fit the spacer spring to prevent the arms from touching the tyres.*

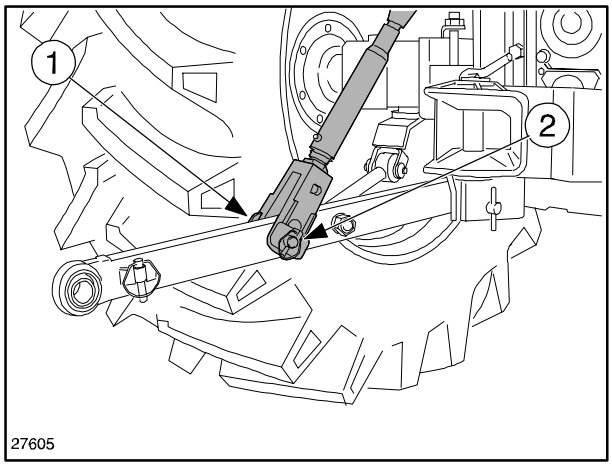

123

Right−hand lift rod with sleeve adjustment − Fig. 124

The length of the right−hand lift rod can be adjusted by rotating the sleeve (**1**).
In order to rotate the sleeve (**1**) it must first be lifted and released from the square section positioned on the lower part of the lift rod.

Lower the sleeve on completion of the adjustment operation.

Make sure that the sleeve is correctly re−positioned in order to prevent accidental rotation.

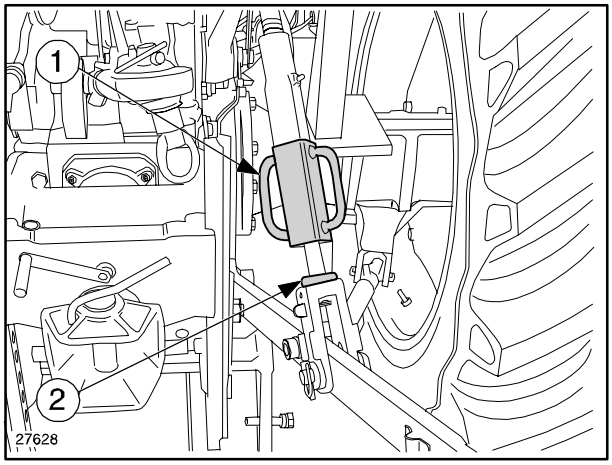

124

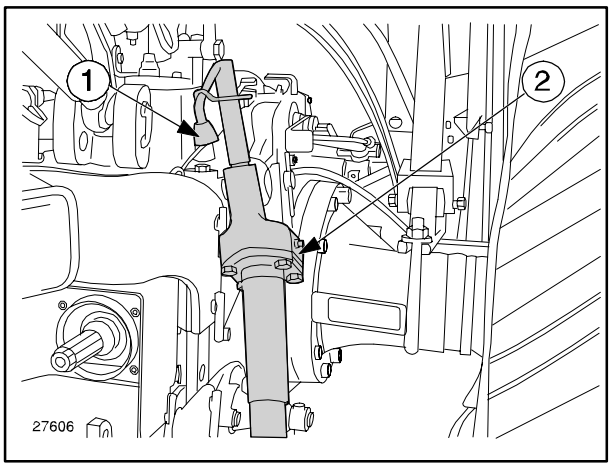

125

Right−hand lift rod with crank adjustment − Fig. 125

The right−hand lift rod (**2**) can be adjusted by means of a crank (**1**) that can also be operated from the driving position.

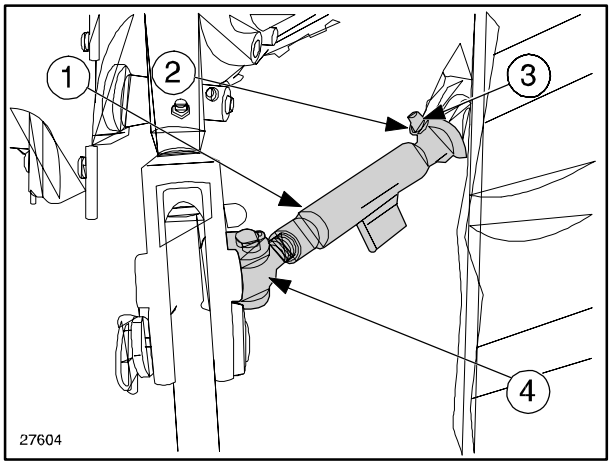

126

Standard lateral stabiliser struts − Fig. 126

To adjust the length of the stabiliser struts (**4**) remove the hairpin cotter (**2**) and turn the sleeve (**1**).
On completion of the lift rod adjustment operation, lower the hairpin cotter in order to lock the pin (**3**) to prevent the sleeve from rotating. With the spring (**2**) raised, the arms will have unrestricted lateral movement.

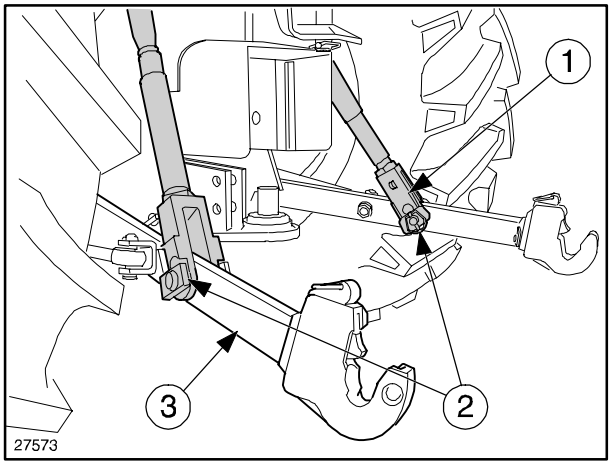

127

Float mode − Fig. 127

Lower lift arms (**3**) float mode can be obtained by rotating the hinge pins (**2**) to the vertical position, to provide oscillation inside the slot holes (**1**).

LOWER ARM MOUNTING POSITION

For light work − Fig. 129

When operating the tractor in draft or mixed control, fit the lower arms (**3**) fig. 128 with spacers (**2**) fig. 129 inside the arms for greater lift sensitivity when working with light implements.

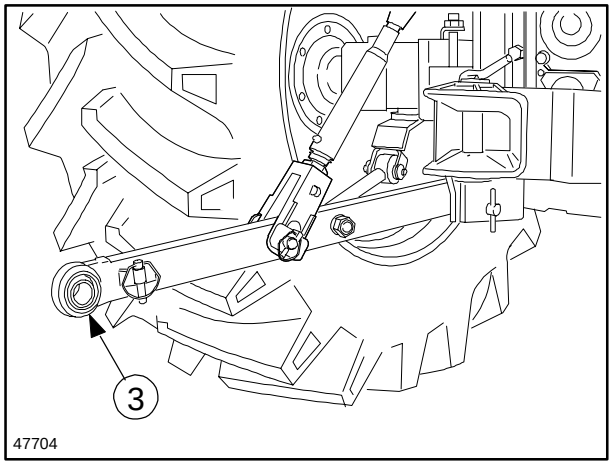

128

Normal or heavy work − Fig. 129

When operating the tractor in draft or mixed control, fit the spacers (**1**) outside the lower arms for normal or heavy work.

This position, which reduces lift sensitivity, enables improved tractor use.

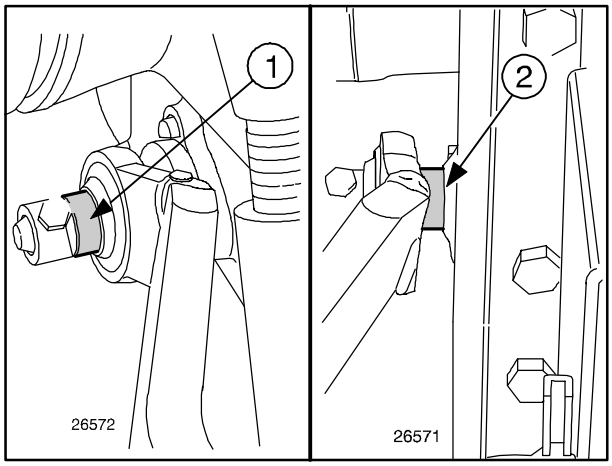

129

Conversion from the 1st to 2nd category − Fig. 130

To allow both 1st and 2nd category equipment to be used, the three−point linkage has:

- one 0.75 inch. (19 mm) inside diameter bushing (**1**) for 1st category implements, to be inserted in the spherical bushing at the end of the top link;
- a series of 0.86 inch. (22 mm) inside diameter bushings (**2**) for 1st category implements, to be inserted in the spherical bushings at the ends of the lower lift arms.

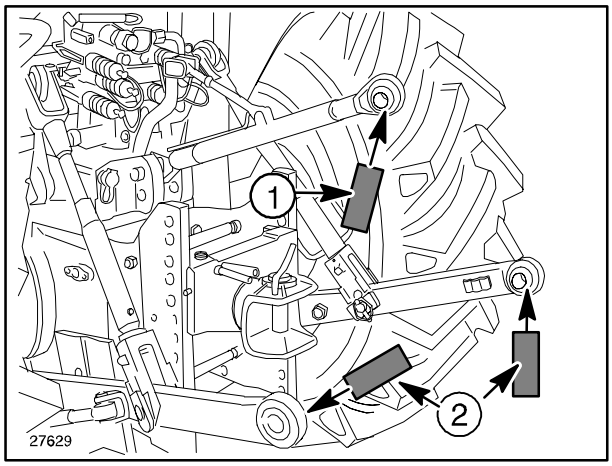

130

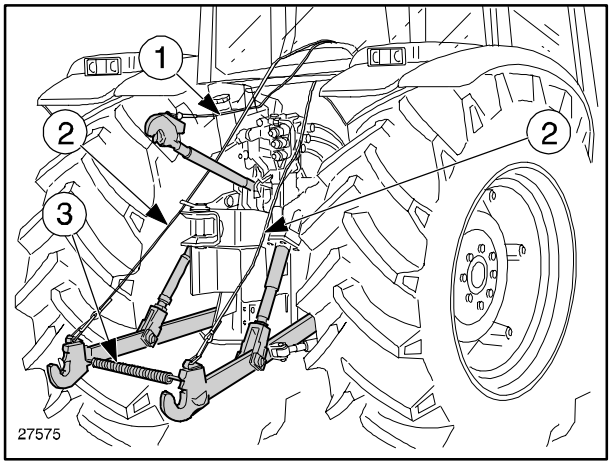

131

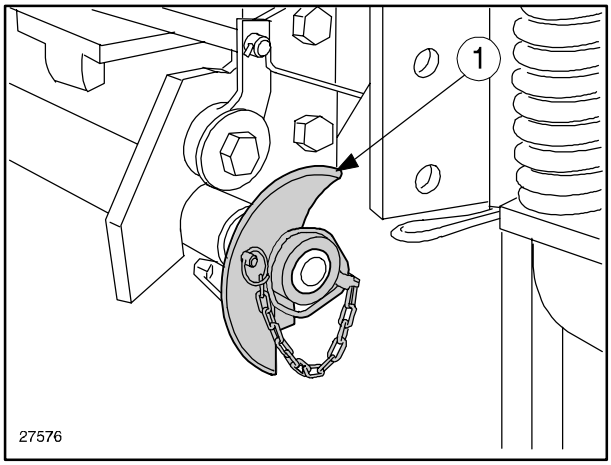

132

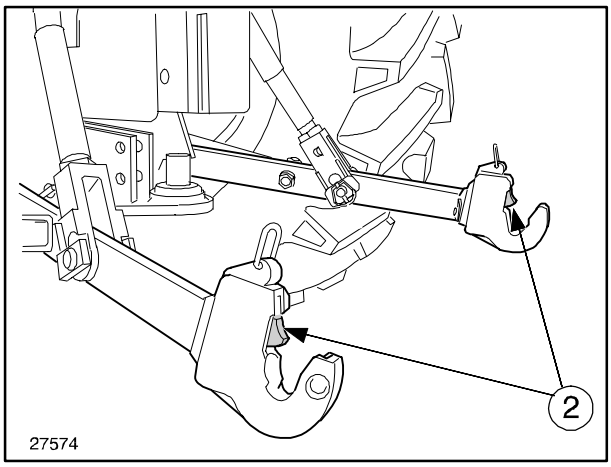

133

QUICK−FIT IMPLEMENT LINKAGE − Fig. 131

HITCHING THE IMPLEMENT

With the lower arms fully lowered, adjust the length of the control cables (**2**), so that they do not drag on the ground when attached to the tractor. Correctly adjust the distance between the lower arm hook ends by tightening or loosening the spacer spring rod (**3**).

Fit the conical pick−up profiles (**1**) fig. 132 on the implement hitch pins, as shown in the drawing.

Reverse the tractor and place in position in relation to the implement, then raise the lower arms: and the implement will be hitched automatically. The hook ends (**1**) fig. 133 should engage in the locked position.
If using 1st category implements, fit the reducer bushes on the implement hitch pins.

CAUTION: *Before lifting the implement, make sure that the two hook ends (**2**) fig. 133 have engaged in the locked position.*

Release the end of the top link by pulling back the control cable (**1**) fig. 131 and hook onto the implement.

Adjust the length of the top link by tightening or loosening the threaded sleeve.

WARNING: *Do not unscrew the sleeve any further when the top link length is 31.49 inch. (800 mm) (with standard implement linkage).*

UNHITCHING THE IMPLEMENT

Rest the implement on the ground and make sure that it is stable.
Disconnect the top link by lifting and then pulling the control cable (**1**) fig. 131.
Slightly raise the implement, then release the hook ends (**2**) fig. 133 by pulling the control cables (**2**) fig. 131 directly from the driving position.
Lower the lower arms until the hooks are released.

TOWING EQUIPMENT

CAUTION: *The towing equipment should be selected on the basis of the type of trailer or implement to be towed and should comply with current legislation.*

- *The ease of handling and driving safety of the tractor depend on correct towing adjustment.*
- *If the towing device is fitted high, the towing capacity is increased, but there is a risk that the tractor will tip back. Therefore ensure that the trailer shaft is not at too great an upwards angle.*
- *When using four−wheel drive, the towing bracket should be in the lower position with the shaft almost horizontal.*
- *Avoid towing excessively heavy trailers or loads.*
- *Never start suddenly, as this also considerably increases the risk of tipping backwards.*
- *Always brake the trailer first, then the tractor.*

SWINGING DRAWBAR ON CATEGORY A SECTOR − Fig. 134

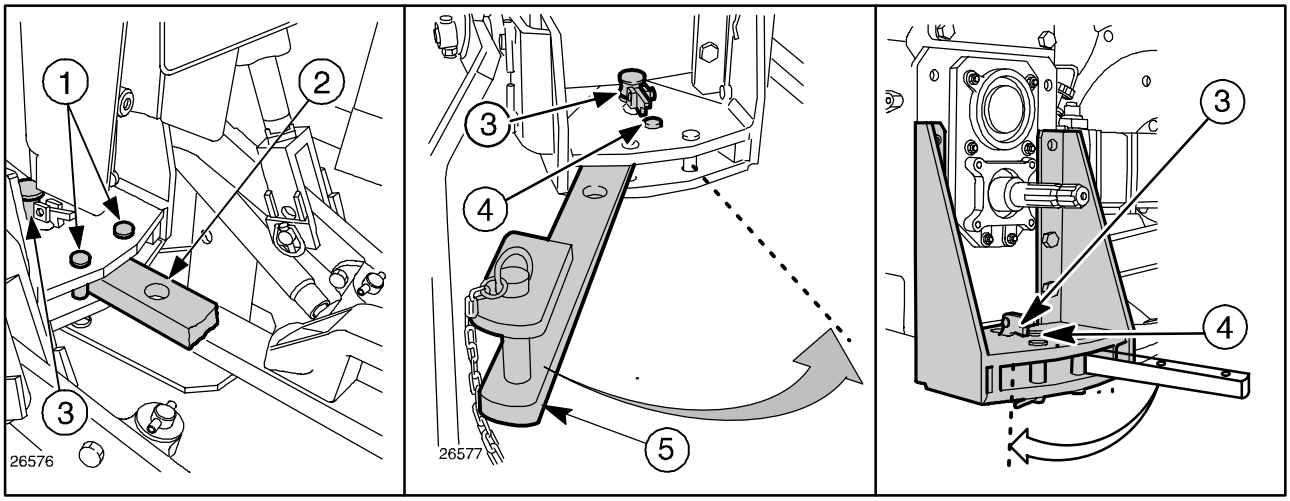

134

Use the swinging drawbar for implements, agricultural machinery and trailers with two axles.
Do not use for single−axle trailers as they apply excessive weight to the bar, which will risk tipping the tractor.
Lateral adjustment of the bar, which can be positioned either to the right or to the left by means of the pin (**1**), is extremely useful for implements or machines requiring free lateral movement.

The device can be supplied:

- with the relative brackets to fit rigid towing hooks and towing hooks;
- with a bracket designed only to fit the towbar.

The following adjustments can be made to the bar:

- height adjustment by fitting the fork (**2**) facing upwards or downwards;
- prevention of lateral swing by inserting two pins (**3**) in the respective holes.

By varying the position of the locking pin (**4**) in the holes in the drawbar (**5**) the distance between the swinging drawbar fork and the power take−off shaft may vary from a minimum of 7.52 inch. (191 mm) and a maximum of 15.98 inch. (406 mm) (measurements **D**−**E** fig. 135).

WARNING: *Use the front towing fork for possible emergency trailer manoeuvres or for towing the tractor.*

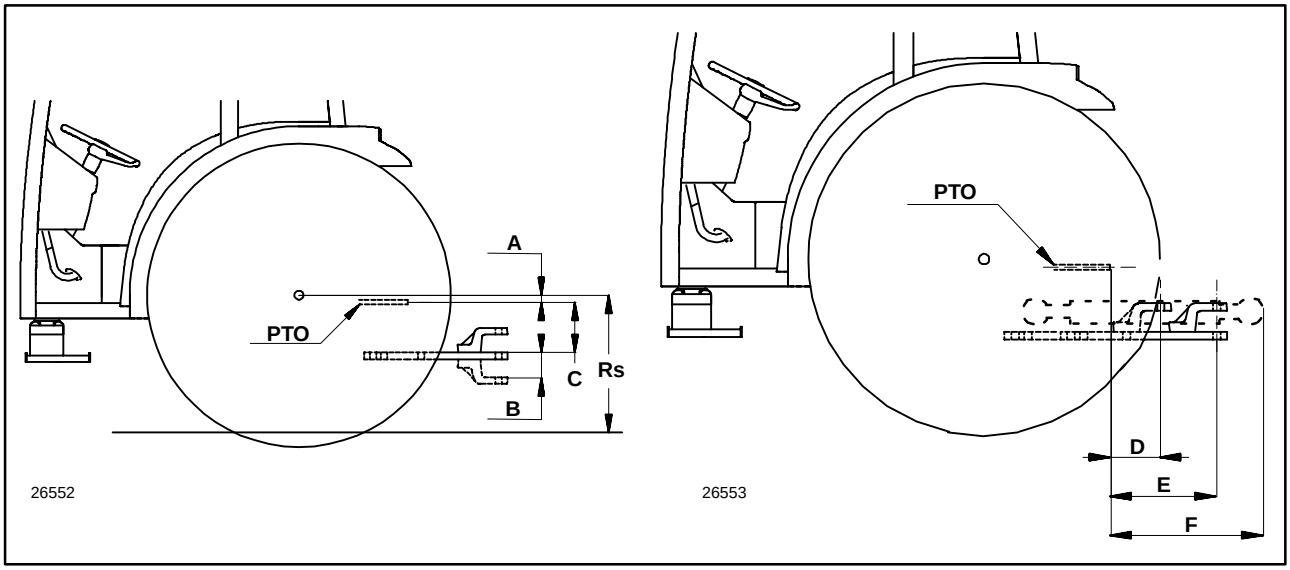

135

All models	
Rs mm (in)	Radius under tyre load
A mm (in)	31 (1.22)
B mm (in)	110 (4.33)
C mm (in)	225 (8.85)
D mm (in)	191 (7.52)
E mm (in)	406 (15.98)
F mm (in)	550 (21.65)

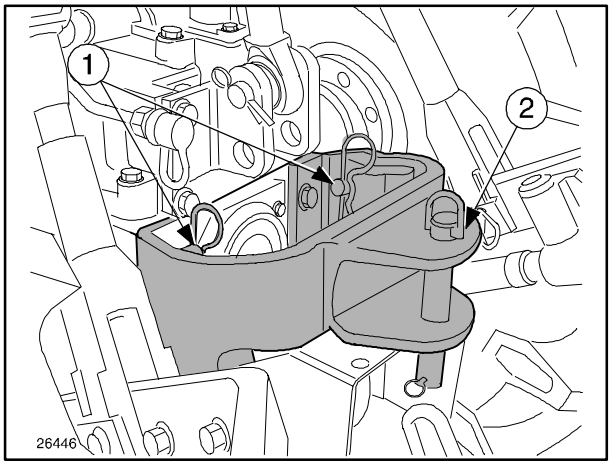

136

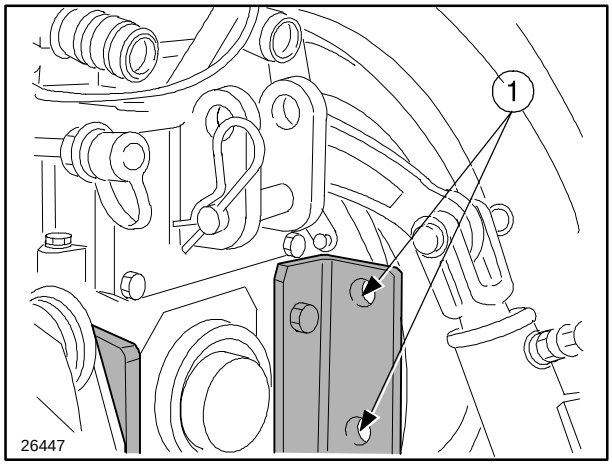

137

HEIGHT ADJUSTABLE RIGID HITCH − CATEGORY C − Figs. 136 and 137

The rigid hitch (**2**) fig. 136 allows all types of trailers to be towed, including one−axle trailers. It is height adjustable for a total of three positions, with rigid power take−off guard, five positions with mobile power take−off guard. It can also be fitted together with the towbar. Fix the hitch to the holes (**1**) fig. 137 by means of the pins (**1**) fig. 136.

HEIGHT ADJUSTABLE HITCH − CATEGORY C − Fig. 138

This device is height−adjustable and can be fitted with the towbar.

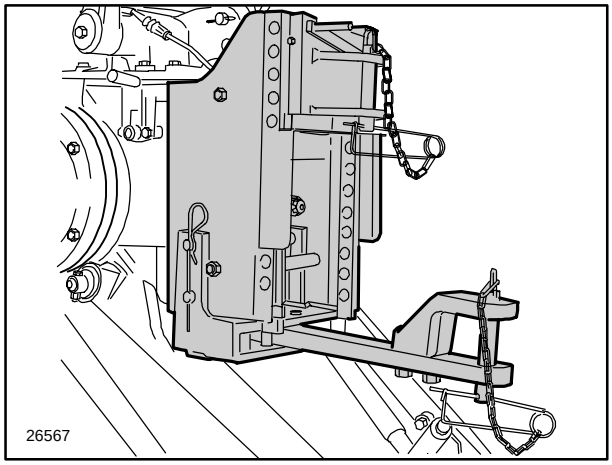

138

HEIGHT ADJUSTABLE REVOLVING HITCH − CATEGORY C − Fig. 139

This device is height−adjustable and can be fitted with the towbar.
The hitch may also be rotated (**1**).

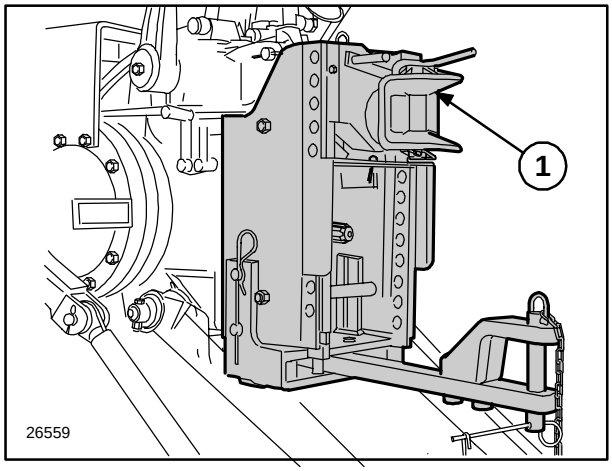

139

ADJUSTING THE HEIGHT OF THE TOWING DEVICES − Figs. 138, 139 and 140

To adjust the height, proceed as follows:

- lift the safety bolt (**1**);
- turn the handle (**2**), upwards, release the safety bolt and position the hitch at the desired height;
- fix in one of the holes (**3**) by turning the handle (**2**) downwards; the safety bolt (**1**) will automatically engage the locked position.

NOTE: *To extend the hitches to their full height, push the upper part of the power take−off guard inwards. To remove the guard (**4**) fig. 140 pull the split−pin (**5**) fig. 140 upwards.*

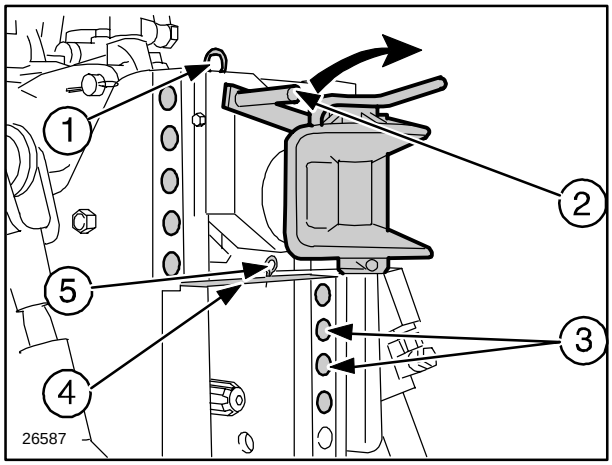

140

CAUTION: *The trailer must not be connected with the hitch free on the power take−off. The hitch must always be in the secured position in the relevant holes.*

THREE POINT LINKAGE TN/D 2/4 WD

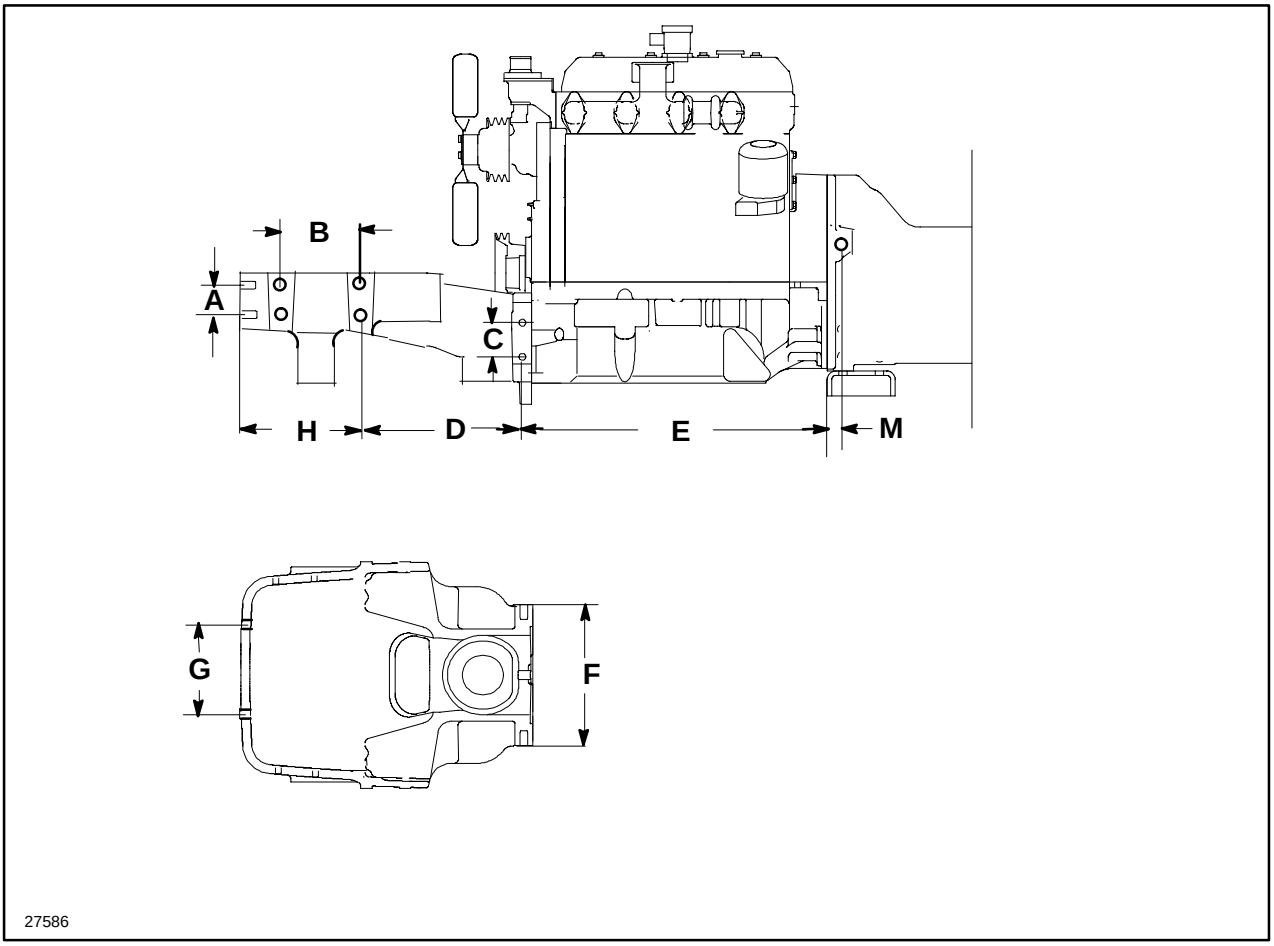

141

Both sides of the tractor are equipped with threaded holes for connecting implements and auxiliary equipment.

The figure shows the free fixing holes on the left hand side of the tractor, which are identical and symmetrical to the fixing holes on the left hand side.

NOTE: Use exclusively *the holes specified in figure 141 when mounting auxiliary equipment.*
The use of different holes for auxiliary applications automatically ***exonerates NEW HOLLAND*** *from all liability in relation to damage to the vehicle or injury to persons, resulting from failure to observe the relative regulations.*

Measurement (mm) inches		mm
A 75 (2.95)	M 20 x 2.5	38 (1.49)
B 154 (6.06)		38 (1.49)
C 75 (2.95)		
D 406 (15.98)		
E 554 (21.81)		
F 320 (12.59)		
G 174 (6.85)		
H 237 (9.33)		
M 35 (1.37)		35 (1.37)

THREE POINT LINKAGE TN/S 4WD

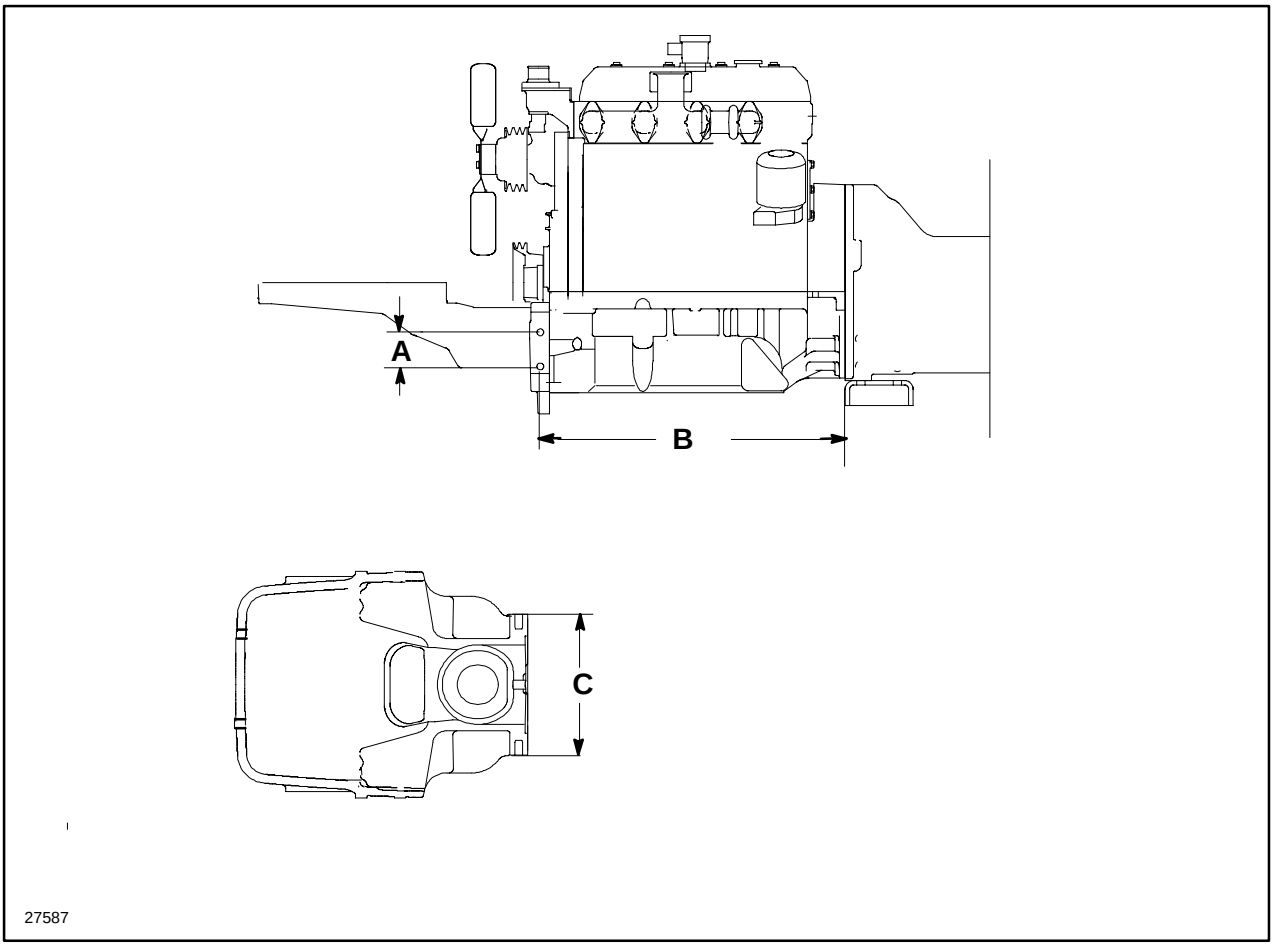

142

Both sides of the tractor are equipped with threaded holes for connecting implements and auxiliary equipment.

The figure shows the free fixing holes on the left hand side of the tractor, which are identical and symmetrical to the fixing holes on the left hand side.

NOTE: Use exclusively *the holes specified in figure 142.*
when mounting auxiliary equipment. The use of different holes for auxiliary applications automatically ***exonerates NEW HOLLAND*** *from all liability in relation to damage to the vehicle or injury to persons, resulting from failure to observe the relative regulations.*

Measurement inches (mm)		mm
A 2.95 (75)	M 20 x 2.5	38
B 21.81 (554)		
C 12.59 (320)		

REAR REMOTE CONTROL VALVES

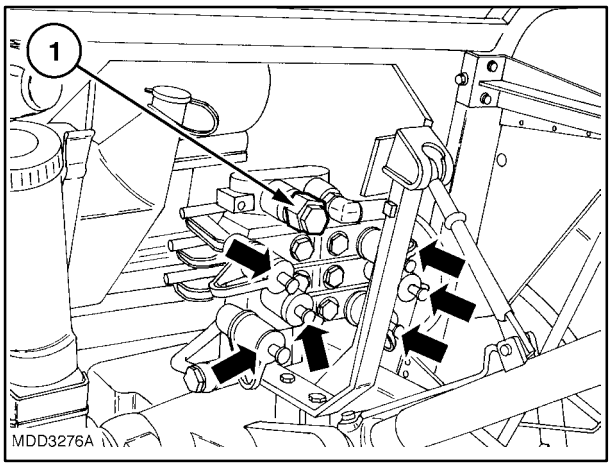

143

AUXILIARY IMPLEMENTS OIL RAPID DISCHARGE UNION − Fig. 142

For implements that operate with an independent hydraulic motor, the oil discharge pipe must be connected to union (**1**).

WARNING: *Each control lever is provided with a coloured plastic cap, making it possible to identify the coupler to which it is connected (fitted with a plastic cap of the same colour).*

WARNING: *When not using the female couplers, protect them with the plastic caps.*

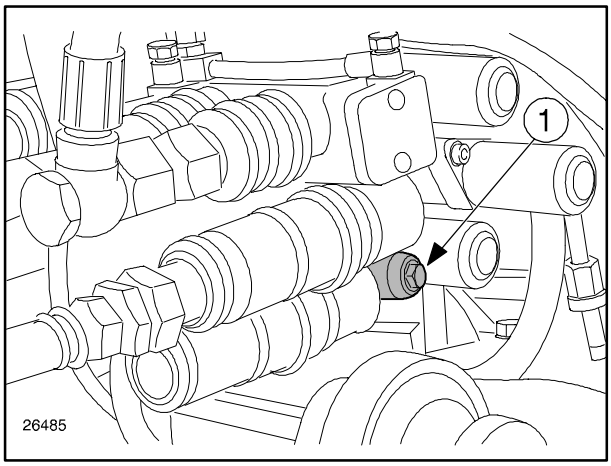

144

QUICK−FIT COUPLERS − Fig. 143

One, two or three control valves using the same oil as the hydraulic lift circuit to which they are connected, can be fitted to your tractor for remote control of single−acting and double−acting cylinders.
Each valve has two 1/2'' quick−fitting female "Push−Pull" couplers which can be connected to pressurised male couplers, available as an optional. You can thus connect the control cylinder lines with just one hand.

Push them in to fit them and pull them out to release them from the female couplers, but only after first:

- stopping the engine;
- lowering any implements connected to the lift;
- thoroughly cleaning the two mating parts.

SINGLE/DOUBLE ACTING SWITCHING − Fig. 144

To switch the control valves to:

- **single−acting**, loosen the screw (**1**) fig. 144 near the control valve lever pivot, until it stops.
- **double−acting**, tighten the screw (**1**) fig. 144 fully.

When using single−acting, in order to quickly identify the coupler to which the implement is to be connected, actuate the valve lever and observe the two lines to which the couplers are connected: the line carrying the oil should move.

For greater safety, check that the line to which the implement is connected using single−acting, is the line on the valve body connected furthest from the change−over screw.

CAUTION: *Leaks of pressurised hydraulic fluid can penetrate the skin and cause severe injuries:*

- ***Never*** *use hands to locate a leak − use cardboard or paper.*
- *Switch off the engine and discharge the pressure before connecting or disconnecting pressurised lines.*
- *Tighten all connectors before starting the engine or pressurising the hydraulic system.*

If fluid penetrates the skin, seek medical assistance immediately to prevent serious injury.

NOTE: *On all models, the control lever (**3**) fig. 145 and fig. 146 may have a button (**4**) fig. 146 for controlling two valves.*

Valve control levers for models with mechanically controlled hydraulic lift.

The control levers (**1**) fig. 145 can be in two positions, excluding the central neutral position:

— forward = down;

— backward = up.

Valve control levers for models with electronically controlled hydraulic lift.

The control levers (**1**) and (**2**) fig. 146 can be in two positions, excluding the central neutral position:

— forward = down;

— backward = up.

VALVES WITH AUTOMATIC RELEASE

Automatic release valves are provided with a mechanical detent which holds the control lever in the up or down position, as well as an automatic lever release mechanism when the implement reaches the travel limit.
When a single−acting valve is used, the automatic release mechanism works only when lifting.

When the implement has reached the desired position, disconnect the valve lever from the detent by hand, moving it to its neutral position.

VALVES WITH FLOAT SETTING

The tractor can be fitted with float setting valves for implements that require this function.
To select the float setting, push the relevant valve lever fully forward, past the first detent, and then push fully forward. A mechanical detent will keep the lever engaged in the float setting.
To release the control lever from the float setting, pull upward to return it to the neutral position.

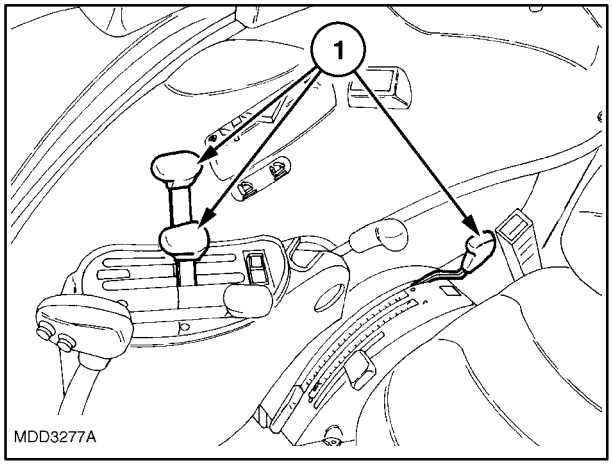

145

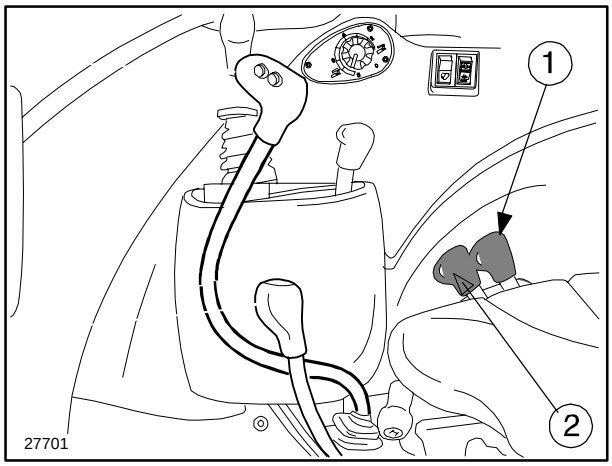

146

JOYSTICK CONTROL (on request)

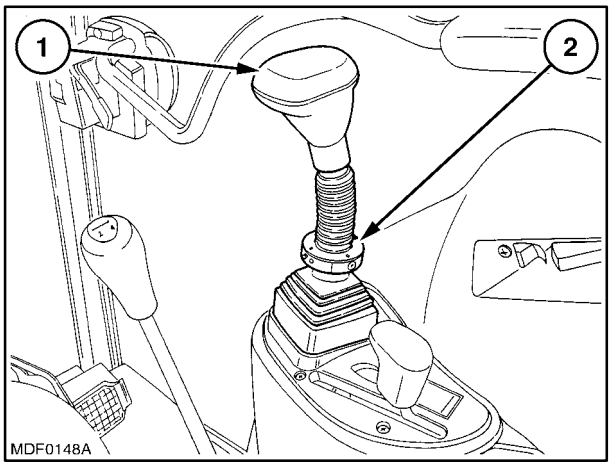

147

The joystick is only fitted when there are two control valves fitted at the side (**3** and **4**) or at the rear (**1** and **2**) (figure 148).

The joystick has six positions: two for raising, 2 in neutral and 2 for lowering.
With the lever (**1**) Fig. 147 in the middle position, pull the safety catch (**2**) upwards and pull it back to lift the implement connected to the control valves No. (**1**) or (**3**) Fig. 148. To lower it, push it forwards.
To set float control, push the lever fully forward beyond the lowering position.

NOTE: *The float mode is only possible with control valves N^{o} (**1**) or (**3**) fig. 148.*

Move lever (**1**) to the right to lower the implement connected to control valves N^{o} (**2**) or (**4**) fig. 148. Move the lever to the left to raise it.

The joystick also enables simultaneous operation of the two control valves by moving the lever between the positions of the control valves N^{o} (**1**) and N^{o} (**2**) or (**3** and **4**). This function is useful when working with loaders, fertilizer spreaders, combined seed drills/ fertilizer spreaders, etc..

NOTE: *Do not hold the lever at either the extended or retracted position when the control valve has reached the travel limit, as this will result in the system operating at maximum pressure. If allowed to continue for long periods of time the oil will overheat, which may lead to problems with hydraulic and drive line components.*

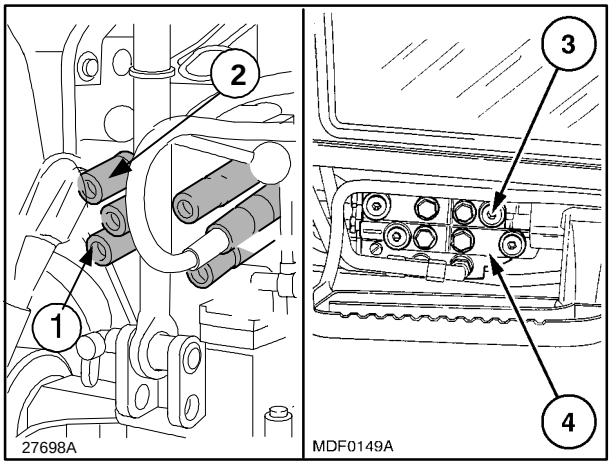

148

Control valve with float setting

A detent holds the control valve lever in the lowering position so that the implement can follow the contours of the land. To reselect the neutral position the lever must be disengaged manually.

CAUTION: *When there are lateral control valves (**3** and **4**) fig. 148 never connect the front loaders to the rear control valves (**1** and **2**) (figure 148).*

HYDRAULIC TRAILER BRAKE VALVE
(Not available on all markets)

CAUTION: *To use the hydraulic trailer braking system correctly, follow the instructions below.*
In addition to the correct operation of the braking system, these instructions will also help to avoid hazard situations which may cause injuries to persons or damage to property.

DANGER: *To brake both the tractor and the trailer simultaneously, always connect the pedals with pin (**1**) fig. 149, as required when driving on roads.*

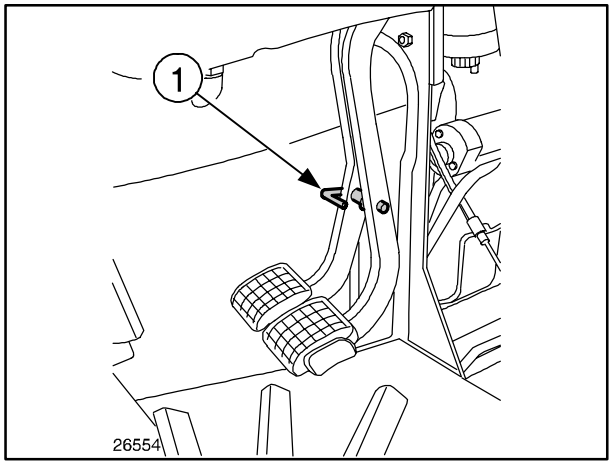

149

The control valve regulating hydraulic braking is located on the right−hand side of the engine. This device is controlled by oil from the tractor brake hydrostatic circuit, pressurised by means of the brake pedals fig. 149; the valve provides the trailer brakes with the same oil as used for the lift unit hydraulic circuit.

TRACTOR−TRAILER COUPLING

First hitch the trailer towing bracket and then, with the engine switched off, connect the trailer brake oil pipe line to the coupler (**1**) fig. 150 positioned on the rear part of the tractor.

CAUTION: *Before connecting the trailer, check that the handbrake is on and the tractor is in gear.*

STARTING THE TRACTOR

Start the engine and press the brake pedals to reduce the time taken to release the trailer brake.
Once the indicator light (**1**) fig. 151 has switched off, the tractor can be started.

WARNING: *Before moving the tractor, make sure that the red warning light (**1**) fig. 151 on the instrument panel is off.*
If the light does not switch off after the brake pedals have been pressed, have the system checked by your New Holland dealer.
The light illuminates as a result of insufficient pressure in the trailer parking brake release system.

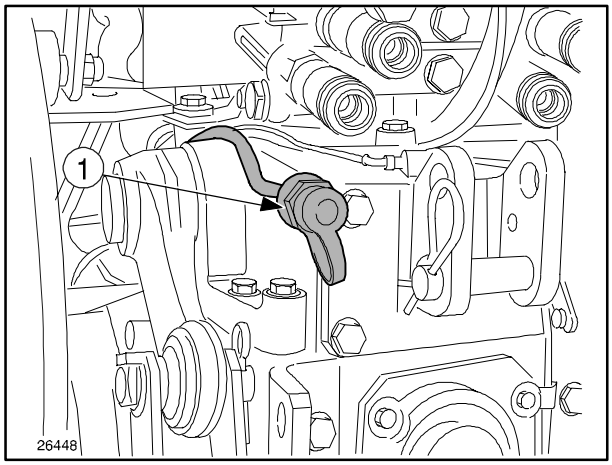

150

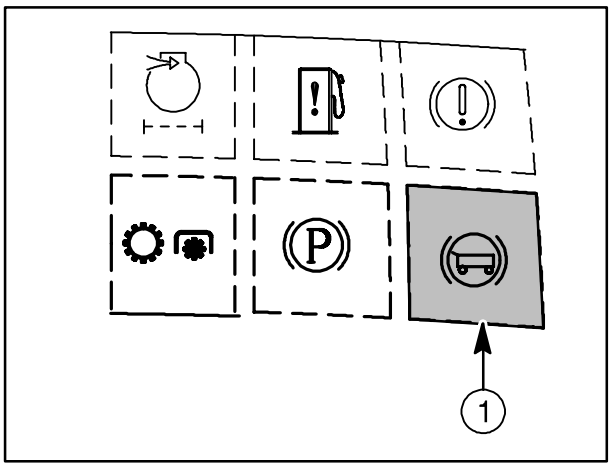

151

STOPPING THE TRACTOR

When stopping the tractor with a trailer connected and the engine running, move the gear lever (**1**) and the range lever (**2**) fig. 152 to the neutral position before leaving the tractor. At this point, apply the handbrake lever to engage the trailer parking brake.

DANGER: *When the tractor is stationary, apply the handbrake and wait for at least* ***10 seconds*** *before switching off the engine, to ensure that the trailer parking brake is engaged.*

UNHITCHING A TRAILER FROM THE TRACTOR

To disconnect the trailer from your tractor, follow the instructions set out below:

- stop the tractor as described above;
- switch off the engine, observing the instructions above;
- disconnect the trailer brake line from the tractor.

If the trailer is on a slope, chock the wheels for greater safety.

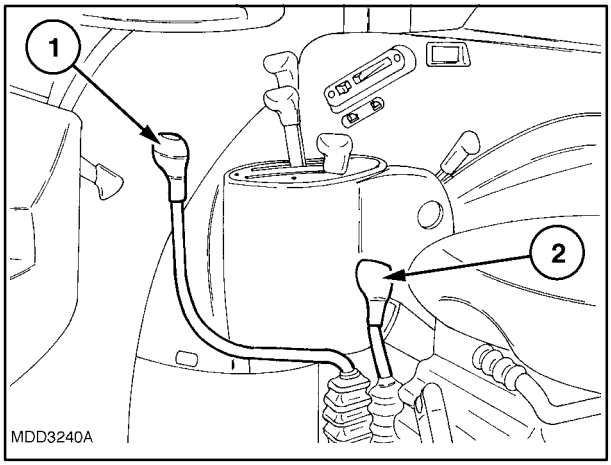

152

WARNING: *Should the engine be accidentally switched off when operating with a trailer attached, the red warning light (**1**) fig. 151 on the instrument panel will illuminate, indicating that the trailer parking brake has engaged automatically. To release, follow the instructions in the heading entitled* ***starting the tractor****.*

CAUTION: *In the event of irregularities in the operation of the braking system, contact your New Holland dealer immediately in order to have the problem fixed.*

WHEEL TRACK ADJUSTMENT

FRONT WHEEL TRACKS, 2WD

To adjust the front wheel track, proceed as follows:

- raise the front of the tractor using a jack positioned at the centre of the axle;
- release the sliding ends by loosening the two retention screws (**1**) and (**2**) fig. 153 on each side (tightening torque 220 Nm − 22.5 kgm);
- adjust the length of the steering struts connected to the two wheels by loosening thefixing screws (**1**) fig. 154 (tightening torque 39 Nm − 4 kgm);
- five possible wheel tracks are provided, as shown on page 2−133, fig. 155.

A larger track (maximum track) can be obtained by reversing the wheels on their hubs.

Only use the maximum track when absolutely necessary.

The tightening torque of the wheel−hub locknuts is 115 Nm (11.7 kgm).

IMPORTANT: *As the tractor is fitted with hydrostatic steering, proceed as described above for the left−hand wheel For the right−hand wheel, after having released the sliding end of the axle, the internal angle of the hydraulic cylinder must be suitably adjusted. Proceed as follows:*

- *loosen the cylinder hose connectors;*
- *make sure the screw (**1**) fig. 154 remains loosened;*
- *insert the pivot pin (**3**) fig. 154 in one of the four corresponding holes (**2**) fig. 154;*
- *tighten the nut on the pin (**3**) fig. 154 (tightening torque 294 Nm − 30 kgm);*
- *tighten the screw (**1**) fig. 154 (tightening torque 39 Nm − 4 kgm);*
- *make sure that the hoses are not twisted and tighten the connectors.*

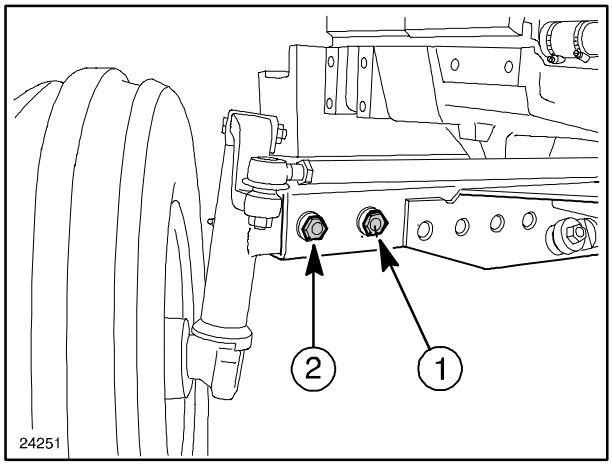

153

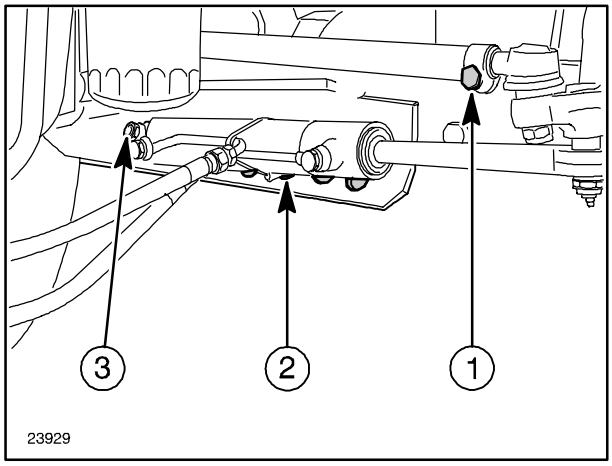

154

2WD front wheel tracks diagram

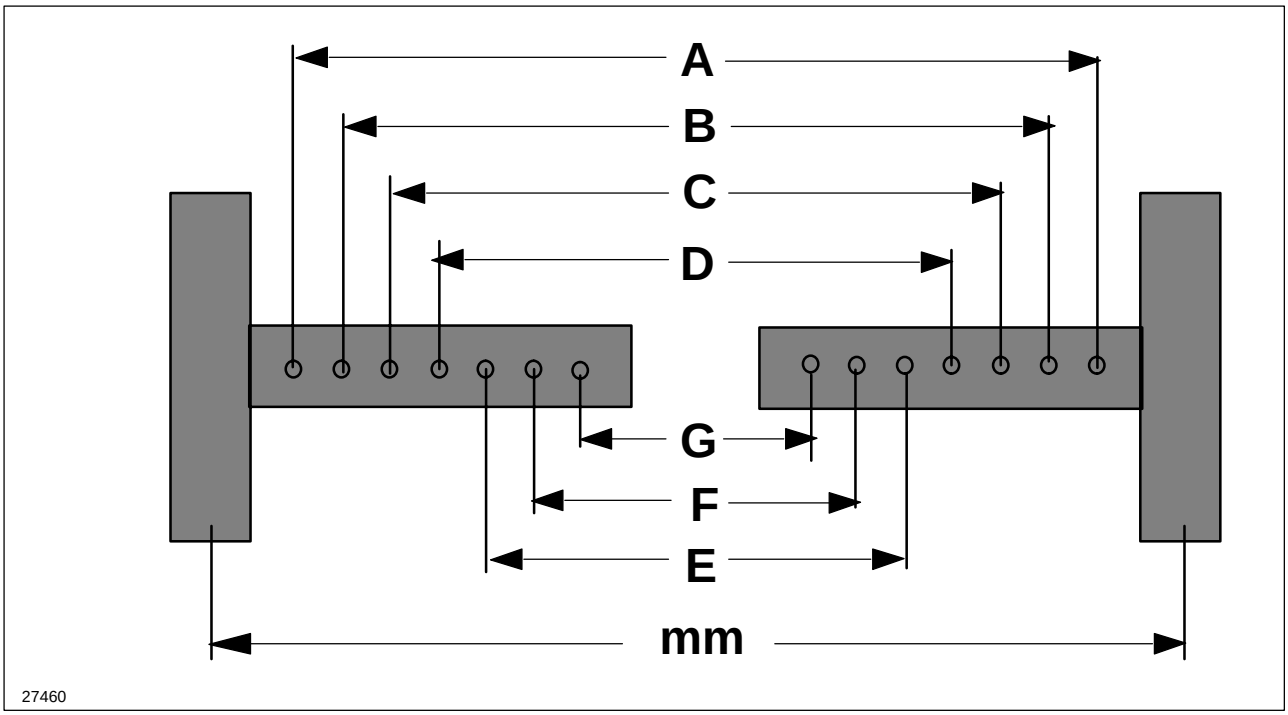

155

Models	Tyres	Wheel tracks mm (inches)						
		A	B	C	D	E	F	G
TN55D TN65D TN70D TN75D	6.0016	1349 (53.11)	1449 (57.04)	1549 (60.98)	1649 (64.92)	1749 (68.85)	1849 (72.79)	1949 (76.73)
	6.5−16							
	6.50−16 F2							
	7.50−16	1357 (53.42)	1457 (57.36)	1557 (61.29)	1657 (65.23)	1757 (69.17)	1857 (73.11)	1957 (77.04)
	7.50−16 F2							
	9.15L 15 F2	1431 (56.33)	1531 (60.27)	1631 (64.21)	1731 (68.14)	1831 (72.08)	(931 (76.02)	2031 (79.96)
	27X9.5−15 F2							
	27X9.5−15 HF							
	11L−15 I1							
	11L−15 F3							
	25/10LLX15 TT							

FRONT 4−WD AND REAR 2/4−WD WHEEL TRACK ADJUSTMENT

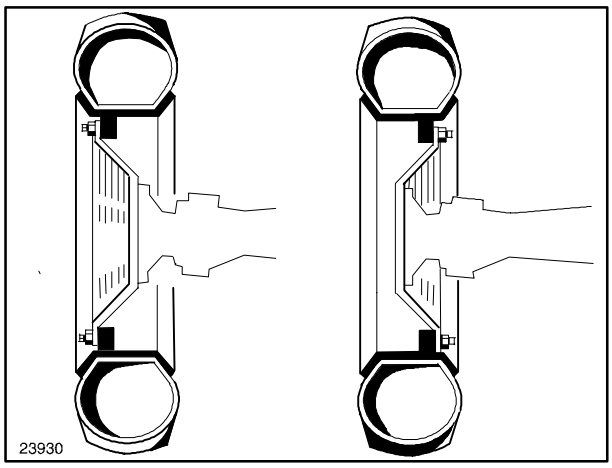

156

The front wheels can be fitted with the concave surface of the disk facing inwards or outwards (see figure 156).
Each of these two disk positions provides a different track width, as shown on pages 2−136 and 2−138.

When adjusting the wheel track, ensure that the points of the tyre treads are still facing in the direction of forward travel, indicated by an arrow on the tyre walls.
Always check that the front and rear wheels are symmetrically aligned in relation to the longitudinal axis of the tractor.

Front wheels 4WD

The tightening torque is 170 ÷ 206 Nm (17.3 ÷ 21 kgm) for the hub disk locknuts, and 170 ÷ 208 Nm (17.3 ÷ 21.2 kgm) for the rim disk locknuts.

Rear wheels 2/4WD

The tightening torque is 310 Nm (31.6 kgm) for the hub disk locknuts, and 217 ÷ 262 Nm (22 ÷ 26.7 kgm) for the rim disk locknuts.

Always make sure that the front and rear wheels are symmetrically aligned in relation to the longitudinal axis of the tractor.

WARNING: *Select the appropriate rear track before changing the front track.*

DANGER: *When removing the wheels, proceed with extreme caution. Use a suitable hoist and specified equipment to move heavy parts.*

STEERING ANGLE ADJUSTMENT

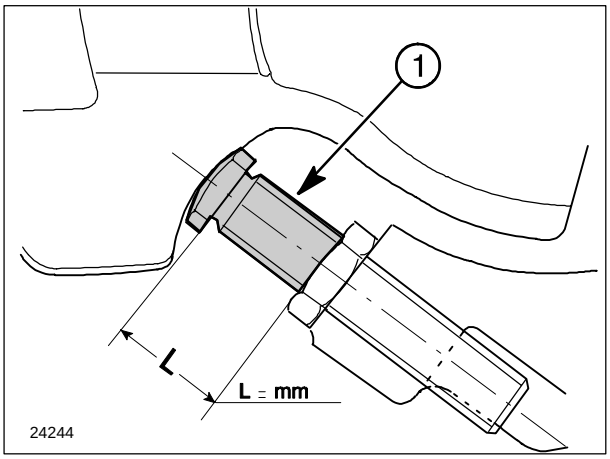

157

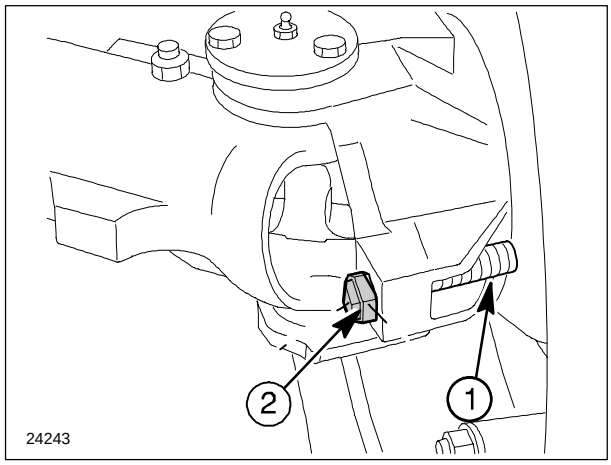

158

When using the narrowest tracks, the tyres may touch the tractor body when the steered wheels are at full lock and the front axle is at maximum pivot position. To avoid this problem, the steering angle can be adjusted by means of screw (**1**) fig. 157.

To adjust the steering angle, proceed as follows:

- turn the wheels;
- adjust the protrusion (**L**) fig. 157, by means of screw (**1**) fig. 158, so that the wheels cannot come into contact with the tractor body;
- on termination of adjustment operations, secure the screw (**1**) fig. 158 by means of the locknut (**2**) fig. 158.

Repeat the same operations for the opposite wheel.

NOTE: *After adjusting the steering angle, make sure that when the wheels are fully locked, there is at least a 0.78 inch. (20 mm) clearance between the tyre or the mudguard and the tractor body.*

MODEL TN55 4WD FRONT WHEEL TRACKS DIAGRAM

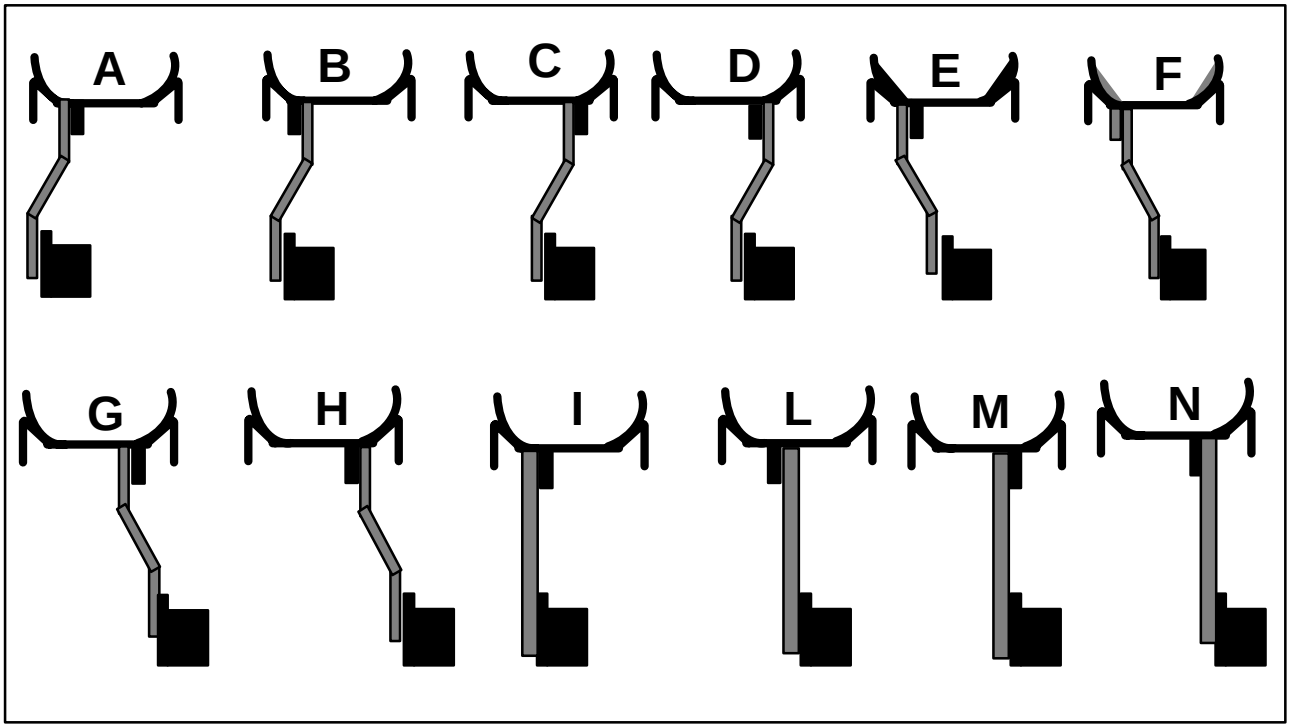

159

Tyres	Wheel tracks mm (inches)							
	A	B	C	D	E	F	G	H
9.5−24R1	1278 (50.3)	1386 (54.5)	1408 (55.4)	1515 (59.6)	1678 (66)	1786 (70.3)	1808 (71.2)	1915 (75.4)
8.3R24								
9.5−20 R1								
300/70R20	1382 (54.4)	1482 (58.3)	1580 (59.6)	1680 (62.2)	1514 (63.5)	1614 (66.1)	1712 (67.4)	1812 (71.1)
320/70R20								
360/70R20								
11.2R20								
31X12.5−15 HF								

Tyres	I	L	M	N
335/80R18	1508 (59.3)	1542 (60.7)	1558 (61.3)	1664 (65.5)
12.4−20	1504 (50.21)	1610 (63.39)	1554 (61.18)	1660 (65.35)
10.5/80−18 I3	1514 (63.5)	1620 (63.78)	1564 (61.57)	1670 (65.75)
9.5 − 16R3	1466 (57.71)	1570 (61.81)	1584 (62.36)	1700 (66.92)

NOTE: *Each track on the table corresponds to one of the positions shown in the drawing.*

TN65D TN70 AND TN75 MODELS 4−WHEEL DRIVE FRONT WHEEL TRACKS DIAGRAM

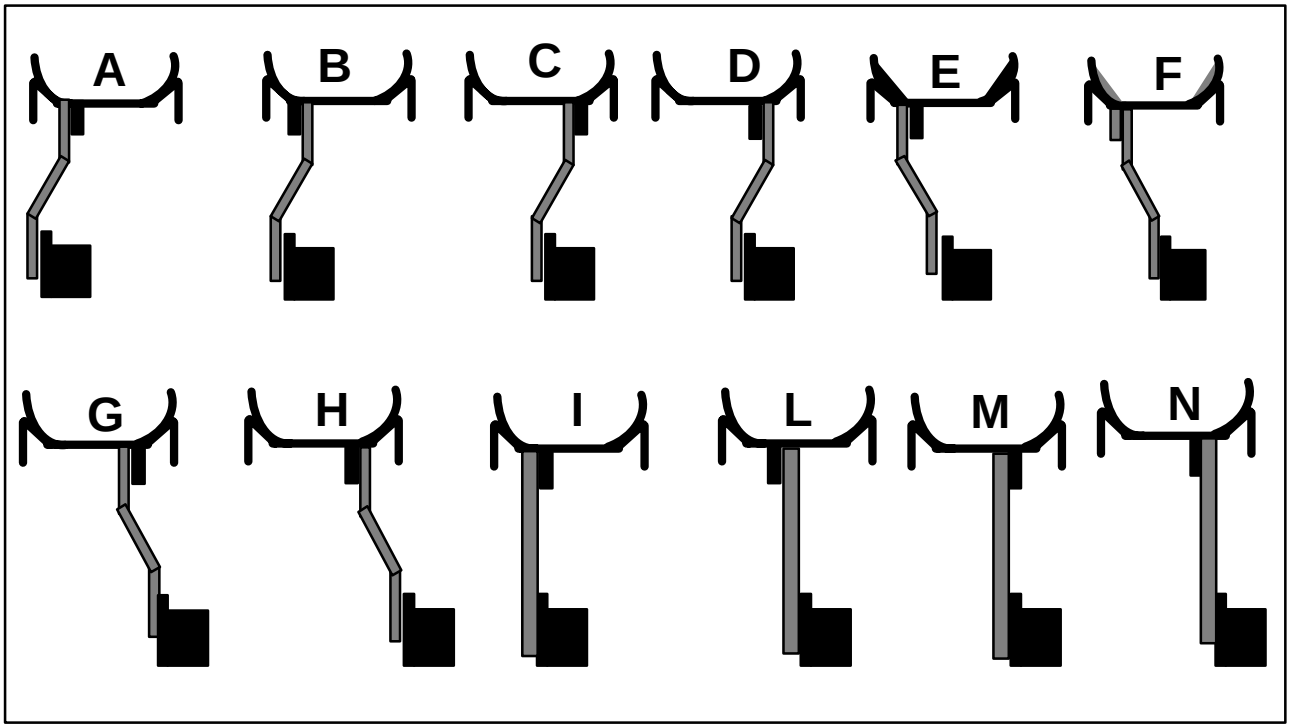

160

	Wheel tracks mm (inches)							
	A	B	C	D	E	F	G	H
9.5−24R1 8.3R24 300/70R24	1272 (50)	1380 (54.3)	1402 (55.2)	1509 (59.4)	1672 (65.8)	1780 (70)	1802 (71)	1909 (75.2)
9.5−20 R1	−	−	1564 (61.57)	1668 (65.66)	1526 (60.07)	1630 (64.17)	1696 (66.77)	1800 (70.86)
11.2R20 300/70R20 360/70R20 405/70R20	1376 (54.1)	1476 (58.1)	1574 (62)	1674 (66)	1508 (59.3)	1608 (63.3)	1706 (67.2)	1806 (71.1)
11.2R24	1236 (48.7)	1344 (52.9)	1438 (56.6)	1545 (60.8)	1636 (64.4)	1744 (68.7)	1838 (72.4)	1945 (76.6)
380/70R20 340/75R20 GT 14.9LR20 GT 375/75R20 GT 10.5−20 R4	1324 (52.1)	1412 (55.6)	1510 (59.4)	1598 (62.9)	1584 (62.3)	1672 (65.8)	1770 (69.7)	1858 (73.1)
12LLX16TT	1565 (61.6)							

Tyres	I	L	M	N
335/80R18	1514 (59.4)	1548 (60.94)	1564 (61.6)	1670 65.7)
9.5−16R3	1460 (57.48)	1564 (61.57)	1578 (62.12)	1694 (66.69)

DIAGRAM OF 2WD REAR WHEELTRACK OR 4WD TN55 MODELS

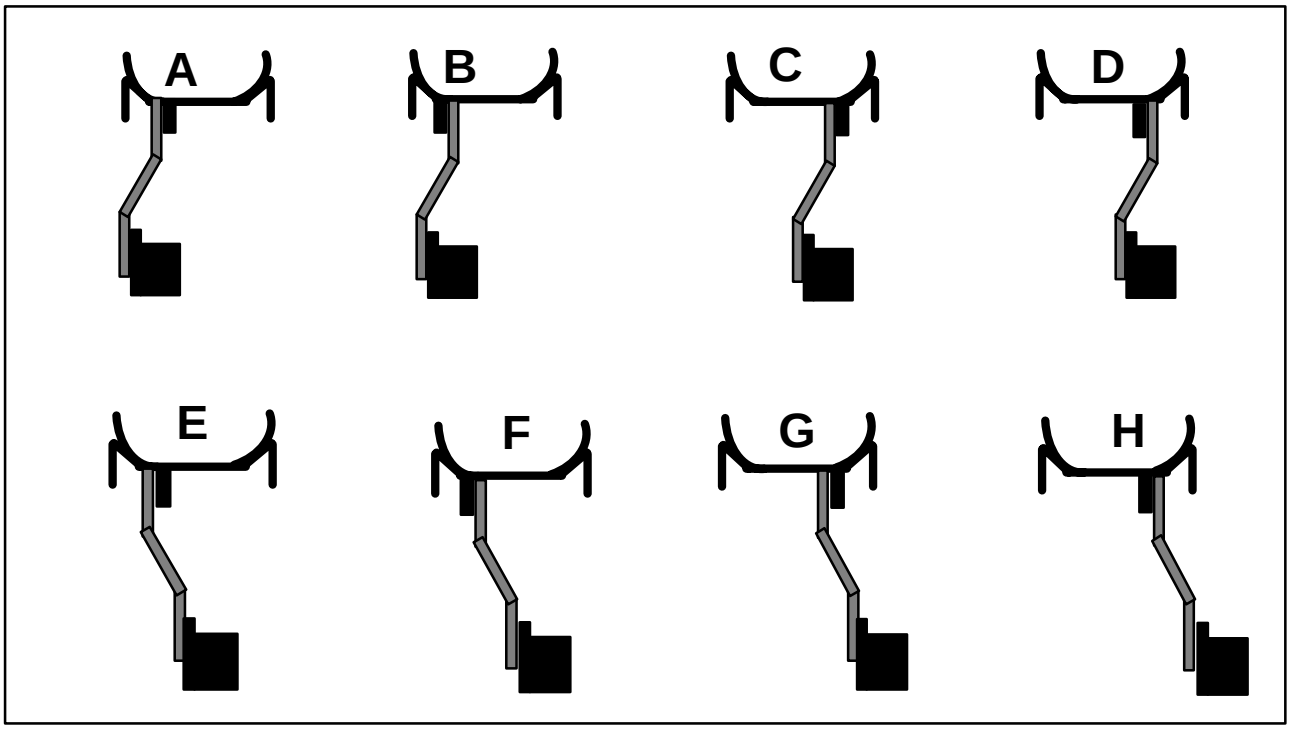

161

Tyres	Wheel tracks mm (inches)							
	A	B	C	D	E	F	G	H
9.5R36	1245 (49.01)	1358 (53.46)	1386 (54.56)	1499 59.01	1645 (64.76)	1758 (69.21)	1786 (70.31)	1899 (74.76)
12.4−32	1260 (49.60)	1358 (53.46)	1384 (54.48)	1482 (58.34)	1660 (65.35)	1758 (69.21)	1784 (70.23)	1882 (74.09)
14.9−28 R1	–	1328 (52.28)	1414 (55.66)	1525 (60.03)	1617 (63.66)	1728 (68.03)	1814 (71.41)	1925 (75.78)
13.6−28 R1								
380/70R28								
420/70R28								
16.9−28 R1	–	–						
480/65R28 GT	–	–	1408 (55.43)	1520 (59.84)	1622 63.85)	1733 (68.22)	1809 (71.22)	1920 (75.5)
420/70R30 **(1)**	–	1333 (52.48)						
14.9R30	–	1409 (55.47)	–	1520 (59.84)	1622 (63.85)	1733 (68.22)	1809 (71.22)	1920 (75.5)
16.9−24 R1/R3	–	1424 (56.06)	1512 (59.52)	1522 (59.92)	1618 (63.70)	(1628 (64.09)	1716 (67.55)	1822 (71.7)
14.9−24 R4	1318 (51.88)							
16.9−24 R4								
21.5L−16.1 R3	–	–	–	1452 (57.16)	1688 (66.45)	–	–	–
18.4−16.1 R3								
22.5LLX16.1 TT								

NOTE: *Each track on the table corresponds to one of the positions shown in the drawing 161.*

DIAGRAM OF 2−WD REAR WHEEL TRACK OR 4WD MODELS TN65, TN70, TN75

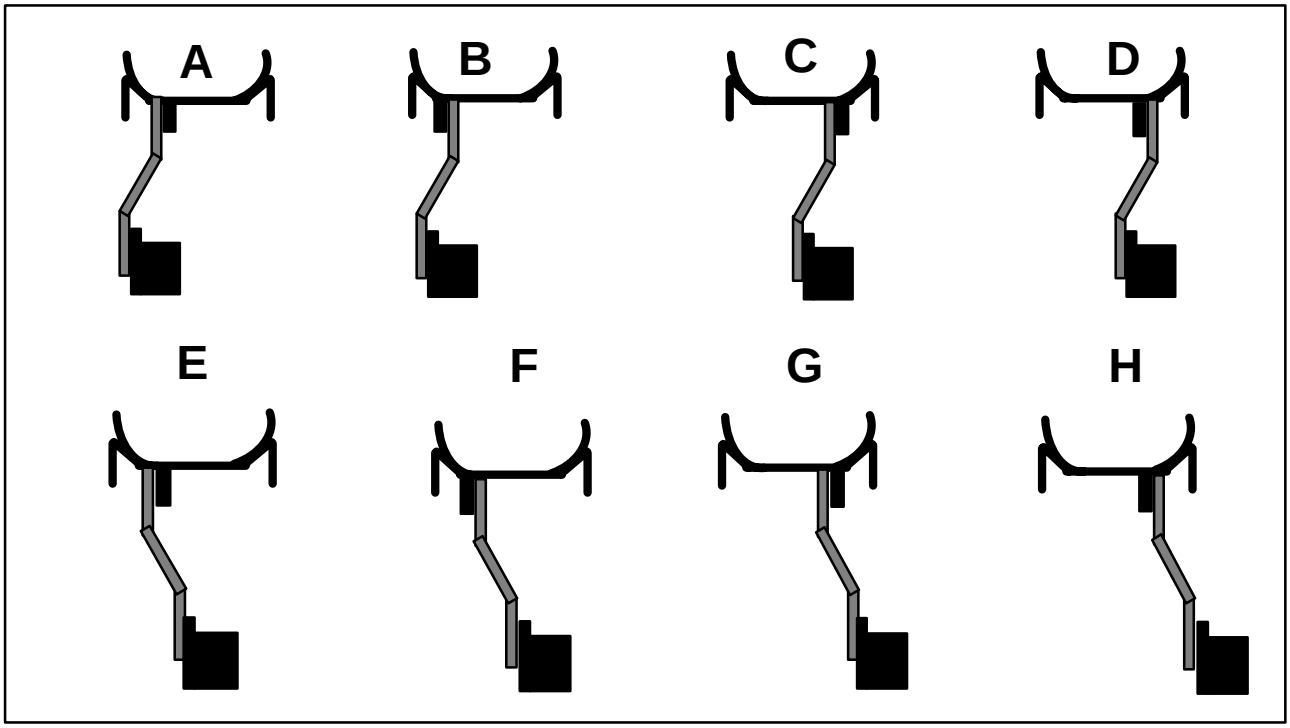

162

Tyres	Wheel tracks mm (inches)							
	A	B	C	D	E	F	G	H
12.4−32	1260 (49.60)	1358 (53.46)	1384 (54.48)	1482 (58.34)	1660 (65.35)	1758 (69.21)	1784 (70.23)	1882 (74.09)
14.9−28 R1	–	1328 (52.26)	1414 (55.66)	1525 (60.03)	1616 (63.62)	1728 (68.03)	1814 (71.41)	1925 (75.78)
13.6−28 R1								
380/70R28								
420/70R28								
16.9−28 R1	–	–	1414 (55.66)	1525 (60.03)	1616 63.62)	1728 (68.03)	1814 (71.41)	1925 (75.78)
16.9−24 R1/R3	–	1424 (56.88)	1512 (59.52)	1522 (59.92)	1618 (63.70)	1628 (64.09)	1716 (67.55)	1822 (71.7)
9.5R36 RC	1245 (49.01)	1358 (53.46)	1386 (54.56)	1499 (59.01)	1645 (64.76)	1758 (69.21)	1786 (70.31)	1899 (74.76)
18.4−16.1 R3	–	–	–	1452 (57.16)	1688 (66.45)	–	–	–
22.5LLX16.1 TT								
12.4R36	1260 (49.60)	1371 (53.97)	1373 (54.05)	1484 (58.42)	1660 (65.35)	1771 (69.72)	1773 (69.80)	1884 (74.17)
480/65R28 GT	–	–	1408 (55.43)	1520 (59.84)	1622 (63.85)	1733 (68.22)	1808 (71.18)	1920 (75.59)
420/70R30	–	1333 (52.48)						
16.9−30	–	1420 (55.90)	–	1520 (59.84)	1622 (63.85)	1820 (71.65)	1722 (67.79)	1920 (75.59)
14.9−24 R4	1318 (51.88)	1424 (56.06)	1512 (59.52)	1522 (59.92)	1618 (63.70)	1628 (64.09)	1716 (67.55)	1822 (71.73)
16.9−24 R4								
480/70R30	–	–	1414 (55.66)	1527 (60.11)	1617 (63.66)	1730 (68.11)	1814 (71.41)	1927 (75.86)
540/65R28 GT	–	–	1414 (55.66)	1525 (60.03)	1617 (63.66)	1728 (68.03)	1814 (71.41)	1925 (75.78)
540/65R30 GT	–	–	–	1527 (60.11)	1617 (63.66)	1730 (68.11)	1814 (71.41)	1927 (75.86)

NOTE: *Each track on the table corresponds to one of the positions shown in the drawing 162.*

TYRES

USE, MAINTENANCE AND REPLACEMENT

■ When changing tyres, select suitable tyres for the actual tractor use, taking account of the recommended combinations on page 2−148.

■ Do not exceed the permitted load indicated on the tyres.

■ Do not exceed the speeds shown on the tyres, as this both overheats and causes premature tyre wear.

■ Do not fit used tyres when the previous use is unknown.
Ask New Holland or a tyre specialist for advice.

■ After fitting tyres, check that the wheel nuts are tight after **62.13 miles (100 km)** or **3 hours** of operation.
Then check the tightness on a regular basis.

■ Do not stand tyres on hydrocarbons (oil, diesel, grease, etc.)

■ The tyres fitted on the tractor must be checked periodically, with special care given to:

− the tread, which should wear uniformly;

− the walls, which must not have cracks, bulges or abrasions.

■ Have the tyres checked by a specialist if one or more of the problems mentioned above should occur.

■ Consult an expert if a tyre is subject to violent shocks, even if there are no visible signs of damage.

■ Tyres age, even if used infrequently or not at all. Cracks on the walls, sometimes accompanied by bulges, are a sign of ageing.

■ Tyres fitted on tractors which are not used for extended periods tend to age more rapidly than those used more frequently. In this event, it is advisable to raise the tractor from the ground and protect the tyres from direct sunlight.

WARNING: *Tyres must be changed by skilled personnel, with the correct tools and technical know−how. If tyres are replaced by unskilled personnel, serious physical injuries may result, the tyres may be damaged and the wheel rim may be distorted.*

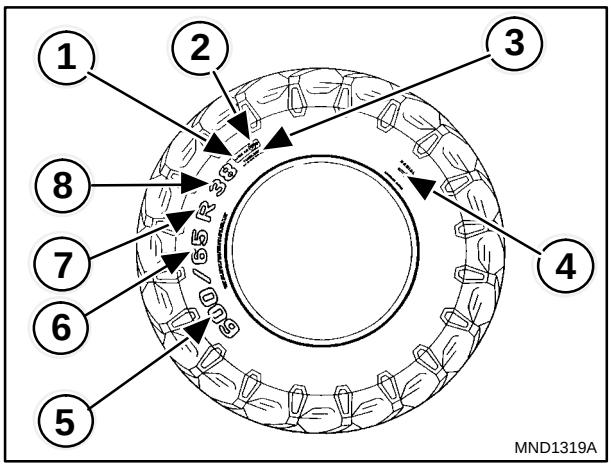

163

Legend − Fig. 163

To indicate, dimensions, structure and specifications of use of a tyre, the manufacturers have internationally adopted standard abbreviations and numbers.

The drawing shows an example of the marking on a tyre used for agricultural work.

Example reading of abbreviation **600/65 R 38**.

1	157 154	Loading capacity index.
2	A8 B	Speed code. Maximum speed in relation to load corresponding to load index (IC), see page
3	TUBELESS	Tyre without inner tube. Tyres with inner tubes are marked **TUBE TYPE** or left blank.
4	→	The arrow shows the direction of tyre travel.
5	**600**	Nominal cross−section width in mm.
6	**65**	Ratio between height and width of cross−section.
7	**R**	Indicates the radial structure. On a conventional tyre, the R is replaced by a hyphen (−).
8	**38**	Rim keying diameter.

Another example of the marking on a tyre: e.g.: **(7.50−16 8 PR)**

7.50	Nominal width of cross−section in inches.
−	Indicates the conventional structure.
16	Rim keying diameter.
8 PR	Tyre resistance index or tyre ply number. (This code is normally marked on conventional tyres, whereas radial tyres are marked with the loading capacity).

Correspondence between tyres of different sizes.

Standard series		Metric series /85		Metric series /70		Metric series /65	
STD. MEAS.	R.I	MEAS. /85	R.I	MEAS. /70	R.I	MEAS. /65	R.I
7.00−16	365			260/70 R16	360		
7.50−16	375			280/70 R16	375	320/65 R16	385
7.50−18	405			280/7 R18	400	320/65 R18	405
9.5 R20	445			300/70 R20	445		
11.2 R 20	465	280/85 R20	465	320/70 R20	465		
12.4 R 20	490	320/85 R20	490	360/70 R20 380/70 R20	490 510	420/65 R20	490
11.2 R24	515	280/85 R24	515	320/70 R24	515		
12.4 R24	540	320/85 R24	540	360/70 R24	540	420/65 R24	540
13.6 R24	560	340/85 R24	560	380/70 R24	560	440/65 R24	560
14.9 R24	590	380/85 R24	590	420/70 R24	590	480/65 R24	590
16.9 R24	620	420/85 R24	620	480/70 R24	620	540/65 R24	620
16.9 R26	645	420/85 R26	645	480/70 R26	645	540/65 R26	645
11.2 R 28	565	280/85 R28	565	320/70 R28	565		
12.4 R28	590	320/85 R28	590	360/70 R28	590	420/65 R28	590
13.6 R28	610	340/85 R28	610	380/70 R28	610	440/65 R28	610
14.9 R28	640	380/85 R28	640	420/70 R28	640	480/65 R28	640
16.9 R28	670	420/85 R28	670	480/70 R28	670	540/65 R28	670
14.9 R30	665	380/85 R30	665	420/70 R30	665	480/95 R30	665
16.9 R30	695	420/85 R30	695	480/70 R30	695	540/65 R30 600/65R28	695 695
18.4 R30	720	460/85 R30	720	520/70 R30	720	600/65 R30	720
16.9 R34	745	420/85 R34	745	480/70 R34	745	540/65 R34	745
18.4 R34	770	460/85 R34	770	520/70 R34	770	600/65 R34	770
13.6 R38	740	340/85 R38	740	380/70 R38	740		
14.9 R38	765	38/85 R38	765	420/70 R38	765		
16.9 R38	795	420/85 R38	795	480/70 R38	795	540/65 R38	795
18.4 R38	820	420/85 R38	820	520/70 R38	820	600/65 R38	820
20.8 R38	855	520/85 R38	855	580/70 R38	855	650/65 R38	855
18.4 R42	870	460/85 R42	855	520/70 R42	855	600/65 R42	870
20.8 R42	905	520/85 R42	905	580/70 R42 710/70 R38	905 905	650/65 R42	905

LOADING INFORMATION

The loading index (IC) is a numerical index indicating the maximum permissible load on the tyre, for the speed indicated by the relevant speed code, under the conditions specified by the manufacturer.

Loading index per wheel											
IC	*kg*	*lb*	***IC***	*kg*	*lb*	***IC***	*kg*	*lb*	***IC***	*kg*	*lb*
93	650	1432	**120**	1400	3094	**147**	3075	6796	**174**	6700	14807
94	670	1477	**121**	1450	3204	**148**	3150	6961	**175**	6900	15249
95	690	1521	**122**	1500	3315	**149**	3250	7182	**176**	7100	15691
96	710	1565	**123**	1550	3425	**150**	3350	7403	**177**	7300	16133
97	730	1609	**124**	1600	3536	**151**	3450	7624	**178**	7500	16575
98	750	1653	**125**	1650	3646	**152**	3550	7842	**179**	7750	17127
99	775	1709	**126**	1700	3757	**153**	3650	8066			
100	800	1768	**127**	1750	3867	**154**	3750	8287			
101	825	1823	**128**	1800	3978	**155**	3875	8564			
102	850	1878	**129**	1850	4088	**156**	4000	8840			
103	875	1934	**130**	1900	4199	**157**	4125	9116			
104	900	1989	**131**	1950	4309	**158**	4250	9392			
105	925	2045	**132**	2000	4420	**159**	4375	9669			
106	950	2099	**133**	2060	4553	**160**	4500	9945			
107	975	2155	**134**	2120	4685	**161**	4625	10221			
108	1.000	2210	**135**	2180	4818	**162**	4750	10497			
109	1.030	2276	**136**	2240	4950	**163**	4875	10774			
110	1.060	2343	**137**	2300	5083	**164**	5000	11050			
111	1.090	2409	**138**	2360	5216	**165**	5150	11381			
112	1.120	2475	**139**	2430	5370	**166**	5300	11731			
113	1.150	2541	**140**	2500	5525	**167**	5450	12044			
114	1.180	2608	**141**	2575	5691	**168**	5600	12376			
115	1.215	2685	**142**	2650	5856	**169**	5800	12818			
116	1.250	2762	**143**	2725	6022	**170**	6000	13260			
117	1.285	2840	**144**	2800	6188	**171**	6150	13591			
118	1.320	2917	**145**	2900	6409	**172**	6300	13923			
119	1.360	3006	**146**	3000	6630	**173**	6500	14365			

SPEED CODE

The speed code indicates the speed at which the tyre can transport a load corresponding to its loading index, under the conditions specified by the manufacturer:

Speed code	
SYMBOL	**kph (mph)**
A1	5 (3.10)
A2	10 (6.21)
A3	15 (9.32)
A4	20 (12.42)
A5	25 (15.5)
A6	30 (18.64)
A7	35 (21.74)
A8	40 (24.85)
B	50 (31.06)
C	60 (37.28)
D	65 (40.38)

WARNING: *Respecting the limits in the tables will ensure that the tyres both perform well and are long−lasting.*
Overloading tyres substantially reduces their service life.

NOTE: *The values in these tables are also marked on the walls of the tyres.*

INFLATION PRESSURES

For safe and long−lasting tyre use, the following instructions must be closely observed.

■ Use the correct pressures for each axle and for the type of use planned.

■ Make sure that tyre pressures are not lower than the correct values, to prevent overheating which may lead to:

− tyre wear;

− bead wear;

− internal damage;

− irregular wear and short service life.

■ Do not over−inflate the tyres, as this may lead to damage in the event of impact and, in extreme conditions, the tyre rim may be deformed or the tyre may burst.

■ Check tyre pressures at least every two weeks. Tyre pressures should only be checked when the tyres are cold as pressures are higher when the tyres are hot from use.
Tyres should be considered to be cold when they have not been used for a period of one hour, or have not covered more than two to three kilometres.
Never reduce tyre pressures when the tyres are hot.

■ When checking tyre pressures, keep the body away from the valve mechanism or cap.

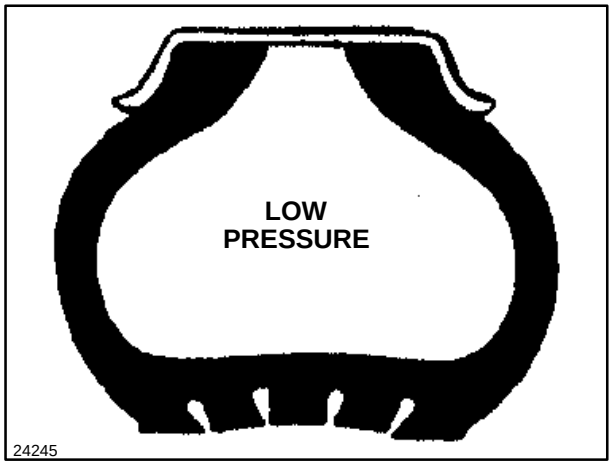

164

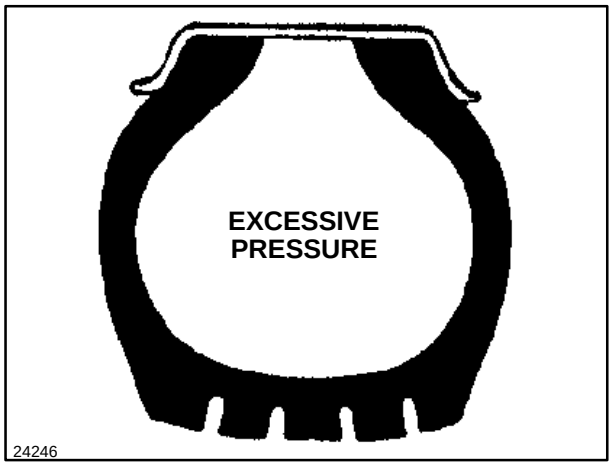

165

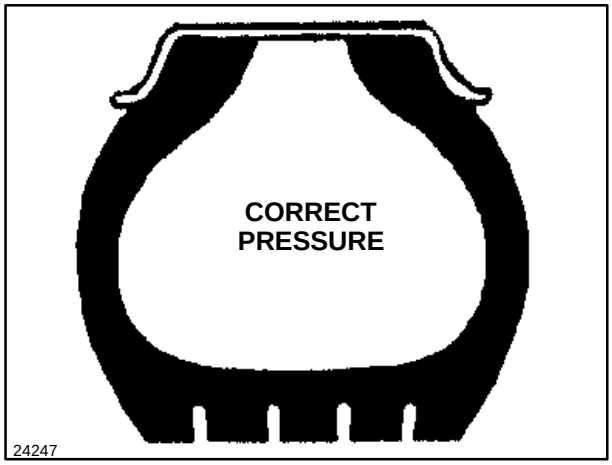

166

FRONT TYRES SIZES AND PRESSURES

2WD MODELS **(*) = NOT AVAILABLE ON ALL MARKETS**

Front tyres	Rim
6.5−16	4.50E−16
6.50−16 F2	
6.00−16	
7.50−16	W5.50−16
6.50−16 F2	
9.15L 15 F2 **(*)**	W8−15
27X9.5−15 F2 **(*)**	
27X9.5−15 HF **(*)**	
11L−15 I1 **(*)**	
11L−15 F3 **(*)**	
25/10LLX15 TT **(*)**	

4WD MODELS **(*) = NOT AVAILABLE ON ALL MARKETS**

Front tyres	Rim
8.3R24	W8−24
8.3R24 R1	
8.3R24 RC	
300.70R24	
300.70R20	W9−20
11.2R20	
16.9−24 R4	
360.70R20	W11−20
12.4−20	
380.70R20	
340/75R20 GT	
14.9LR20 GT	
405/70R20	
11.2R24	W10−24
11.2R24 R1	
335/80R18	9X18
335/80R18 GT	
12LLX16TT	W10LX16
375/75R20 GT	11−20
16.9−24 R3	W12−16
27X9.5−15 HF **(*)**	W10LB−15
10.5/80−18 I3 **(*)**	W9−18
9.5−16R3 **(*)**	W8−16
14.9−28 R1 **(*)**	W8−20
9.5−24/R1 **(*)**	W8−24

REAR TYRE SIZES

(X) = NOT AVAILABLE ON ALL MARKETS

Rear tyres	Rim
12.4−32	W11−32
12.4−36	W11−36
380/70R28	W12−28
13.6R28	
14.9−28 R1	
14.9R28	W13−28
14.9−28 R1	
420/70R28	
14.9R30	DWW13−30
420/70R30	
16.9−R30	DWW14−30
14.9−28 R1	
480/70R28	W15L−28
14.9−28 R1	
25/10LLX15 TT	W86X16.1
14.9−28 R1 **(*)**	W14L−24
16.9−24 R3 **(*)**	
16.9−24 R4 **(*)**	
44X18.00−20 R3 **(*)**	W14LH−2
16.9−24 R3 **(*)**	W16X16.1
21.5L−16.1 R3 **(*)**	
16.9−24 R4 **(*)**	W13L−24

TYRE COMBINATIONS

(X) = AVAILABLE **(ND) = NOT AVAILABLE**

RECOMMENDED COMBINATIONS, 2WD

Front tyres	Rear tyres	Models		
		TN55	TN65	TN70 − TN75
6.5−16	12.4−32	X	X	X
6.5−16	12.4−36	ND	X	X
6.5−16	380/70R28	X	ND	ND
6.50−16 F2	14.9−28 R1	X	X	X
6.00−16	13.6R28	X	ND	ND
7.50−16	14.9R28	X	X	X
7.50−16	14.9R30	X	ND	ND
7.50−16	420/70R28	X	X	X
7.50−16	420/70R30	X	X	X
7.50−16	380/70R28	ND	X	X
7.50−16	16.9−R30	ND	X	X
7.50−16	480/70R28	ND	X	X
6.50−16 F2	14.9−28 R1	X	X	X
6.50−16 F2	14.9−28 R1	X	X	X
6.50−16 F2	14.9−28 R1	ND	X	X
9.15L 15 F2	14.9−28 R1	X	X	X
9.15L 15 F2	14.9−28 R1	ND	X	X
9.15L 15 F2	14.9−28 R1	ND	X	X
27X9.5−15 F2	16.9−24 R3	ND	X	X
27X9.5−15 F2	44X18.00−20 R3	ND	X	X
27X9.5−15 HF	16.9−24 R3	X	ND	ND
27X9.5−15 HF	16.9−24 R3	X	X	X
27X9.5−15 HF	21.5L−16.1 R3	X	X	X
27X9.5−15 HF	44X18.00−20 R3	X	ND	ND
11L−15 I1	16.9−24 R3	X	X	X
11L−15 F3	16.9−24 R4	X	X	X
11L−15 F3	16.9−24 R4	X	X	X
25/10LLX15 TT	25/10LLX15 TT	X	X	X

4WD WITH STANDARD FRONT AXLE RECOMMENDED COMBINATIONS

(1) ONLY 24.85 mph (40 km/h) MODELS

COMBINATION FOR MODEL TN55D

Front tyres	Rear tyres	Manufacturer	Pressure psi (bar)	
			FRONT	REAR
8.3R24	12.4−32	Taurus	22 (1.5)	22 (1.5)
300/70R20	380/70R28			
300/70R20	13.6R−28		20.31 (1.4)	23.20 (1.6)
320/70R20	420/70R28	Pirelli	22 (1.5)	22 (1.5)
360/70R20	420/70R30 **(1)**	Taurus	17.40 (1.2)	22 (1.5)
11.2R20	14.9R28		24 (1.7)	19 (1.3)
12.4−20	14.9R30 **(1)**	Kleber − Pirelli	22 (1.5)	22 (1.5)
335/80R18	480/65R28 GT	Michelin		
12LLX16TT	25/10LLX15 TT	Galaxy	10 (0.7)	7.3 (0.5)

COMBINATION FOR MODELS TN65D TN70D AND TN75D

Front tyres	Rear tyres	Manufacturer	Pressure psi (bar)	
			FRONT	REAR
8.3R24	12.4−32	Taurus	22 (1.5)	22 (1.5)
300/70R24	480/70R28			
300/70R20	380/70R28			
320/70R20	420/70R28		24 (1.7)	19 (1.3)
11.2R20	14.9R28			
11.2R24	12.4R36		22 (1.5)	22 (1.5)
380/70R20	480/70R30	Pirelli	22 (1.5)	22 (1.5)
360/70R20	420/70R30 **(1)**			
340/75R20 GT	16.9R28 GT	Kleber		
14.9LR20 GT	16.9R30 GT			
375/75R20 GT	540/65R28 GT	Michelin		
405/70R20	540/65R30 GT			
335/80R18 GT	480/65R28 GT		22 (1.5)	17.40 (1.2)
12LLX16TT	25/10LLX15 TT	Galaxy	10 (0.7)	7.3 (0.5)

4WD RECOMMENDED COMBINATIONS SUPER−STEER VERSION
(1) ONLY TN55S VERSION 24.85 mph (40 km/h)

COMBINATIONS FOR MODEL TN55S

Front tyres	Rear tyres	Manufacturer	Pressure psi (bar)	
			Front	Rear
8.3R24	12.4−32	Taurus	22 (1.5)	22 (1.5)
300/70R20	13.6R28		20.31 (1.4)	23.20 (1.6)
300/70R20	380/70R28		22 (1.5)	22 (1.5)
12.4−20	14.9R30	Kleber − Pirelli		
320/70R20	420/70R28	Taurus		
360/70R20 **(1)**	420/70R30 **(1)**	Pirelli	17.40 (1.2)	22 (1.5)
335/80R18	480/65R28 GT	Michelin	22 (1.5)	22 (1.5)
12LLX16TT	25/10LLX15 TT	Galaxy	10 (0.7)	7.3 (0.5)

COMBINATIONS FOR MODELS TN65S TN70S AND TN75S

Front tyres	Rear tyres	Manufacturer	Pressure psi (bar)	
			Front	Rear
8.3R24	12.4−32	Taurus	22 (1.5)	22 (1.5)
11.2R24	12.4R36			
300/70R24	480/70R28			
300/70R20	380/70R28			
320/70R20	420/70R28		24 (1.7)	19 (1.3)
11.2R20	14.9R28			
380/70R20	480/70R30	Pirelli	22 (1.5)	22 (1.5)
360/70R20	420/70R30			
340/75R20 GT	16.9R28 GT	Kleber		
14.9LR20 GT	16.9R30 GT			
375/75R20 GT	540/65R28 GT	Michelin		
335/80R18	480/65R28 GT			
405/70R20	540/65R30 GT			
335/80R18 GT	480/65R28 GT		22 (1.5)	17.40 (1.2)
12LLX16TT	25/10LLX15 TT	Galaxy	10 (0.7)	7.3 (0.5)

4WD MODELS TYRE SELECTION

When replacing original tyres, installed by **NEW HOLLAND** with tyres of different sizes or makes, the new combination must maintain an advance of between −2% and − 4%.

The following diagrams are used to determine the measurements of the new combination.

Example of tyre selection

The rolling circumference of the front tyres are on the vertical axis in the diagram, whereas the rolling circumference of the rear tyres are on the horizontal axis.

Front tyre selection

If the rolling circumference of the rear tyre is known, draw a vertical line on the diagram in correspondence with the value, (example (**4**) 156.77 inch. (3982 mm)). In order to enter within the parameters of between −2% and − 4%, the front tyre must have a rolling circumference (**2**) of between 115.94 inch. (2945 mm) and 118.89 inch. (3020 mm).

Rear tyre selection

If the rolling circumference of the front tyre is known, draw a horizontal line on the diagram in correspondence with the value, (example (**1**) 124.96 (3174 mm)). In order to enter within the parameters of between −2% and − 4%, the front tyre must have a rolling circumference (**3**) of 164.57 inch. (4180 mm) to 169.68 inch. (4310 mm)), corresponding with the intersecting points of the two diagonals.

NOTE: *For models in the TN−D series with standard front axles, the forward reference must be between* + 1% *and* + 4%.

(**A**) Forward reference diagonal −2%. (**B**) Forward reference diagonal −4%.

Diagram

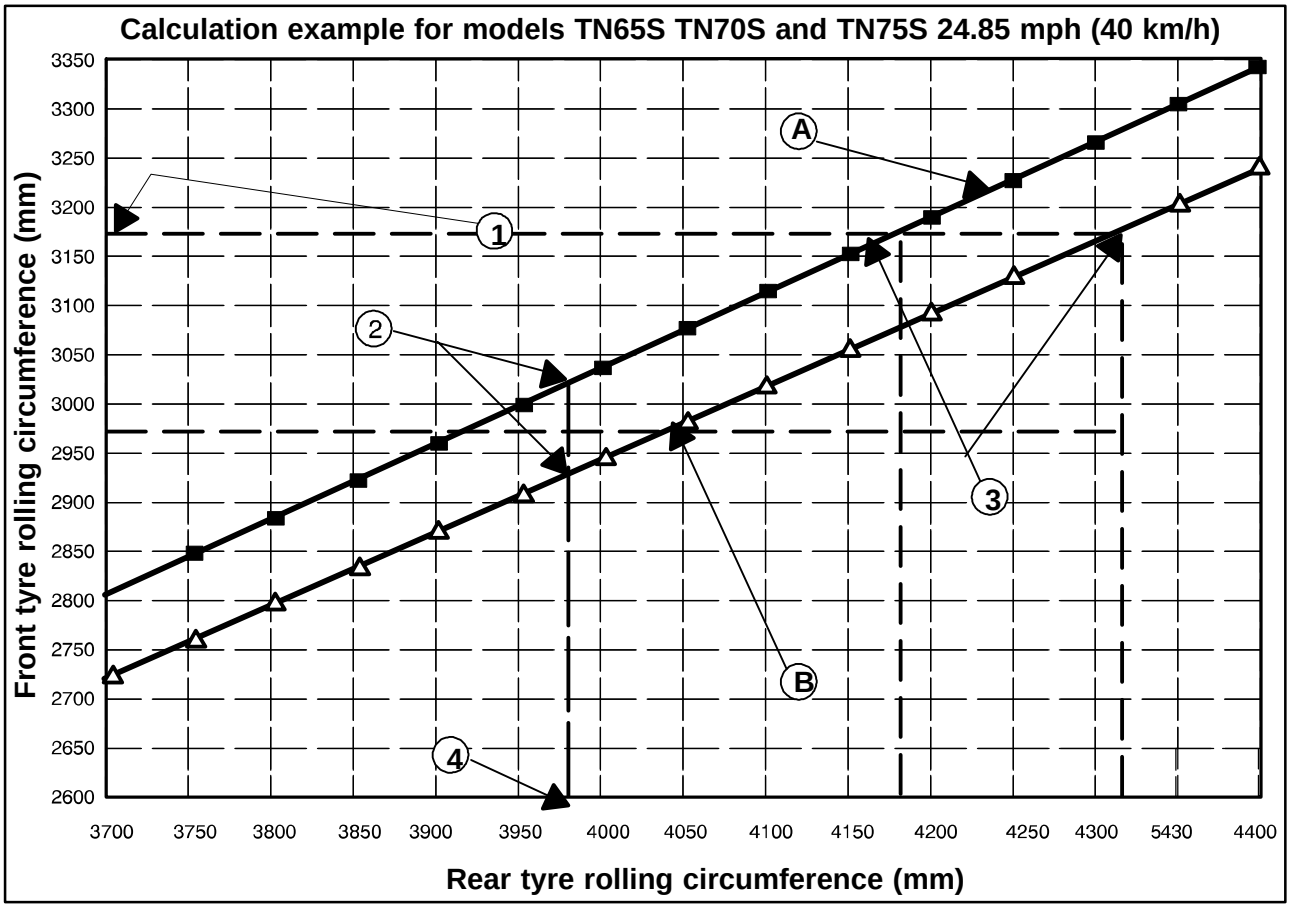

167

Model TN55D 18.64 mph (30 km/h)

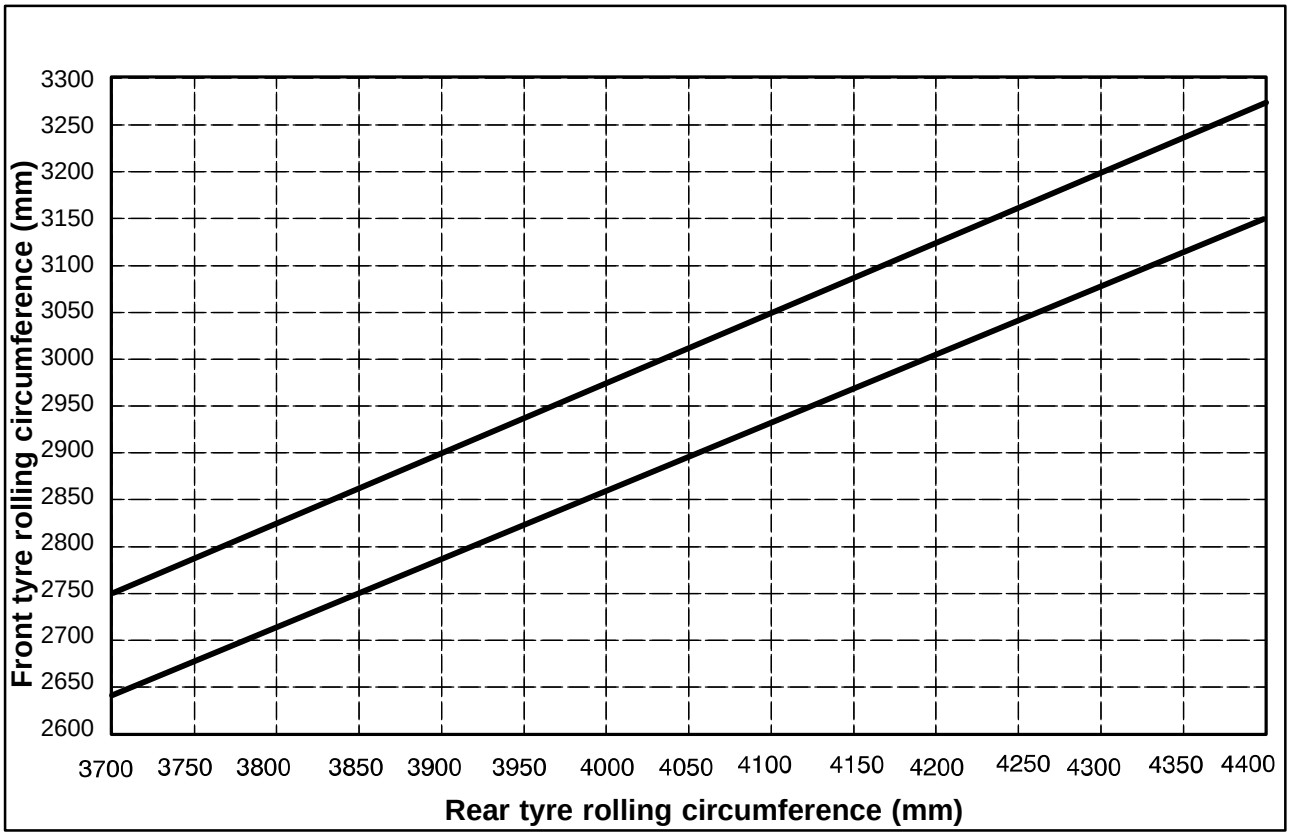

168

Model TN55D 18.64 mph (30 km/h)

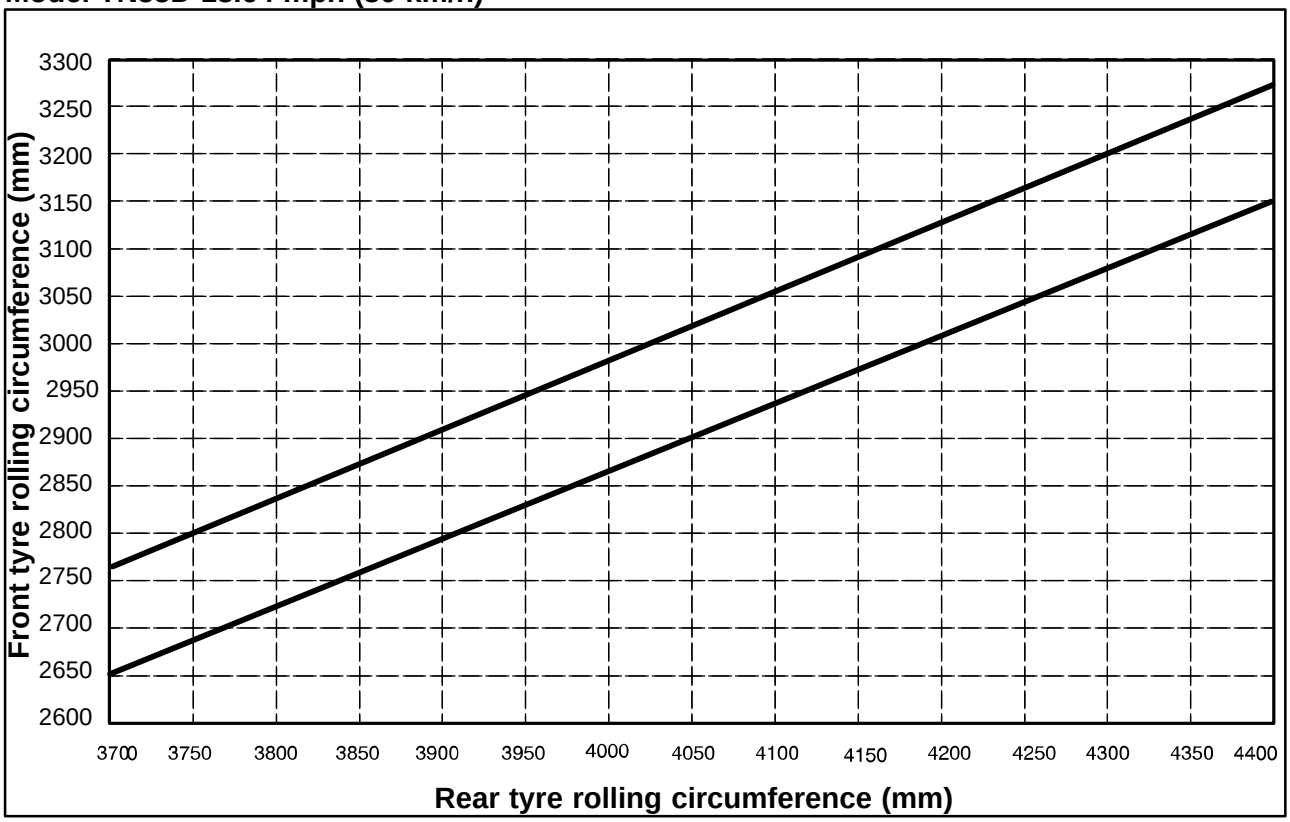

169

Model TN55S 18.64 mph (30 km/h)

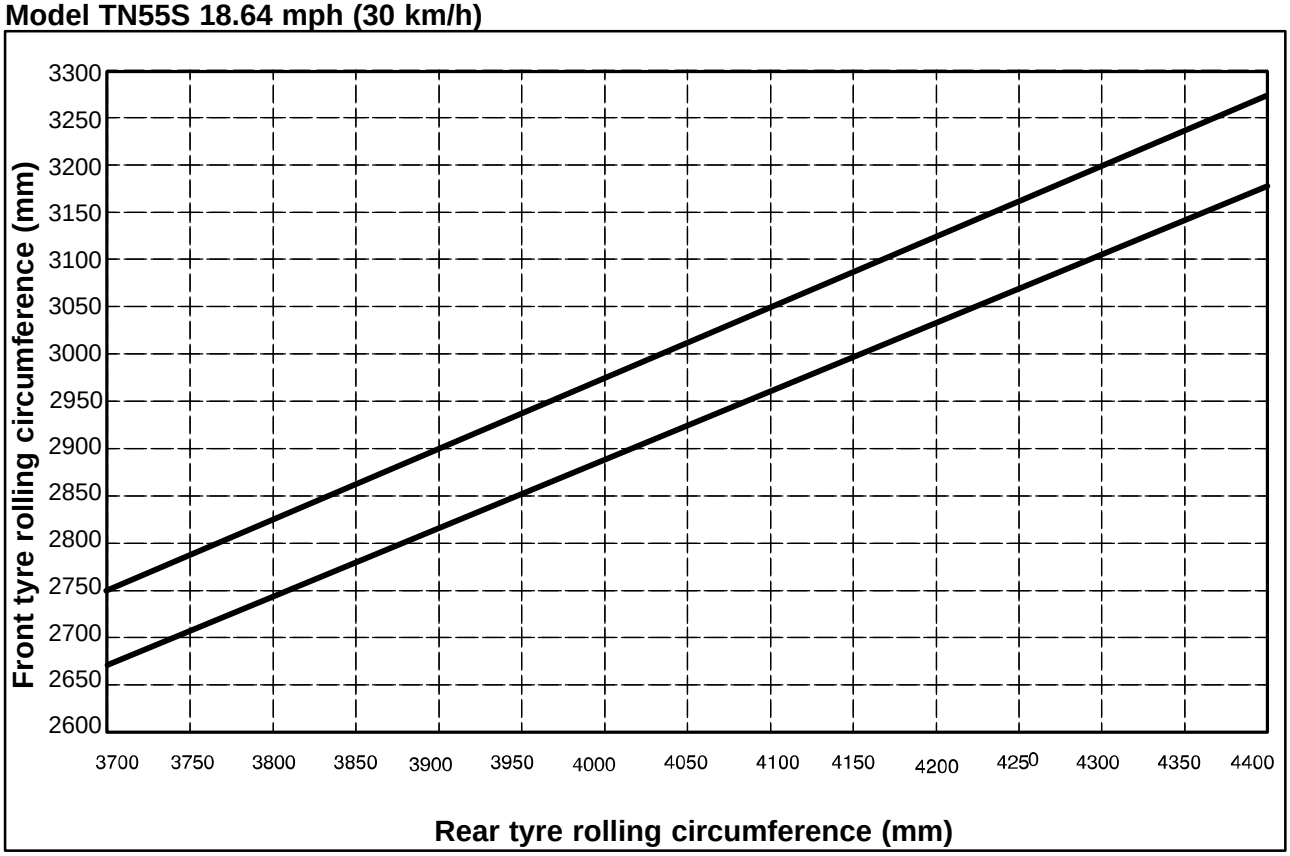

170

Models TN55S 24.85 mph (40 km/h)

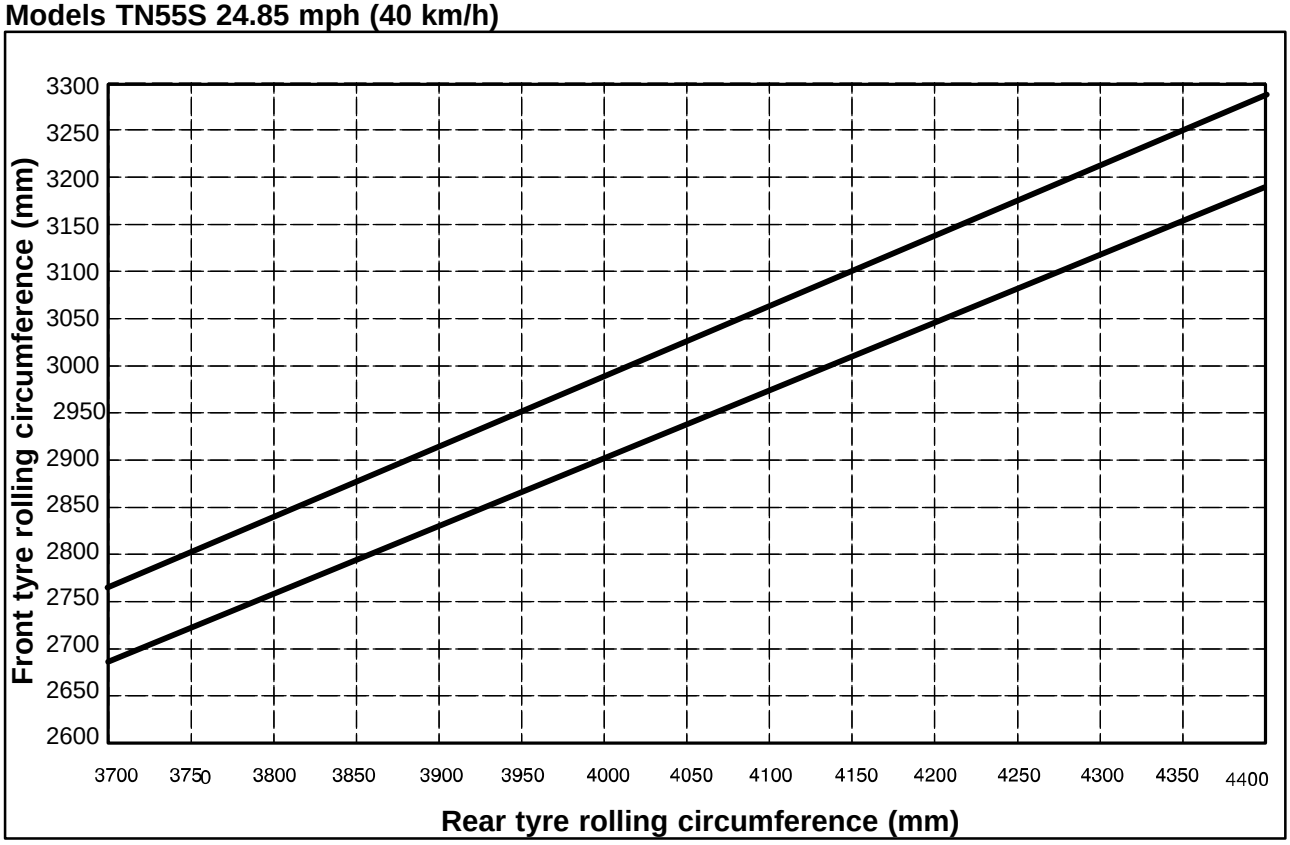

171

MODELS TN65D, TN70D, TN75D 18.64 mph (30 km/h)

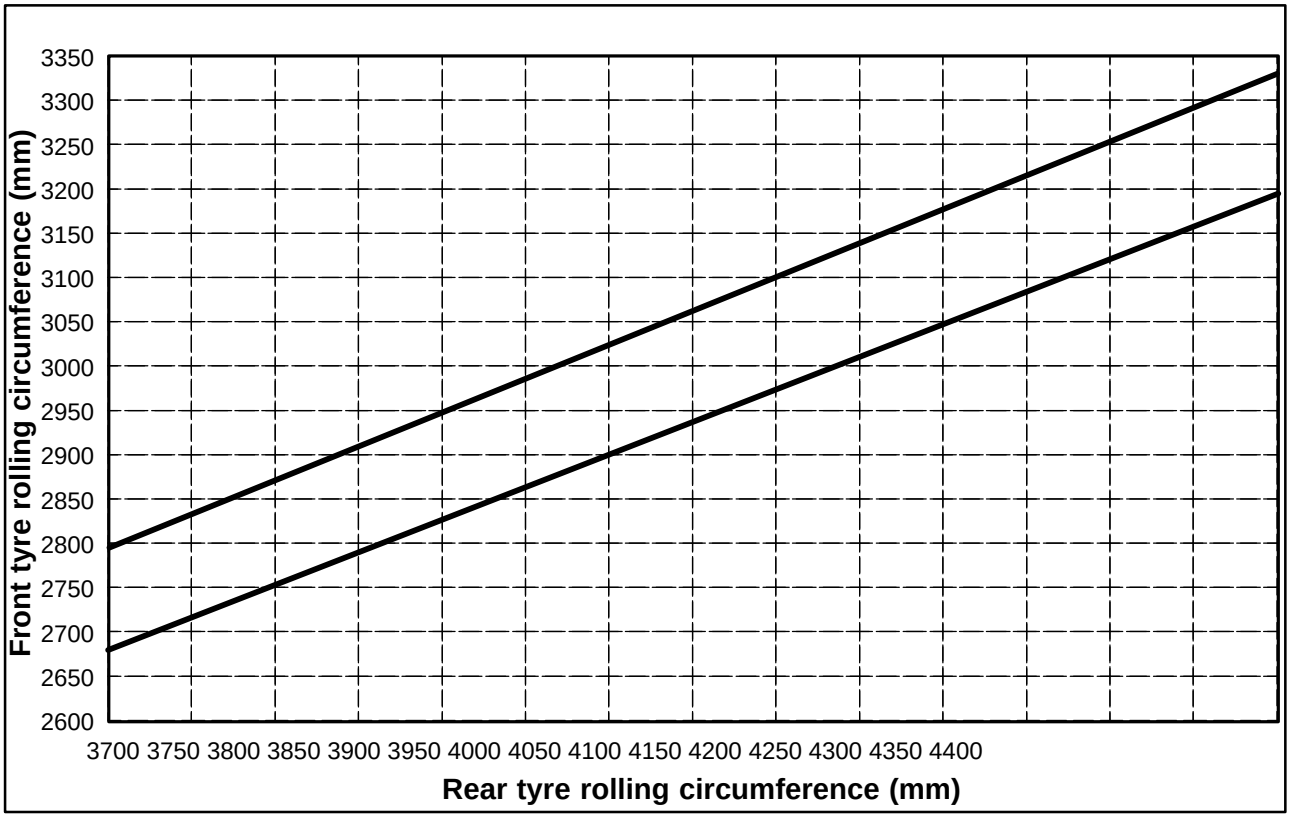

172

MODELS TN65D, TN70D, TN75D 24.85 mph (40 km/h)

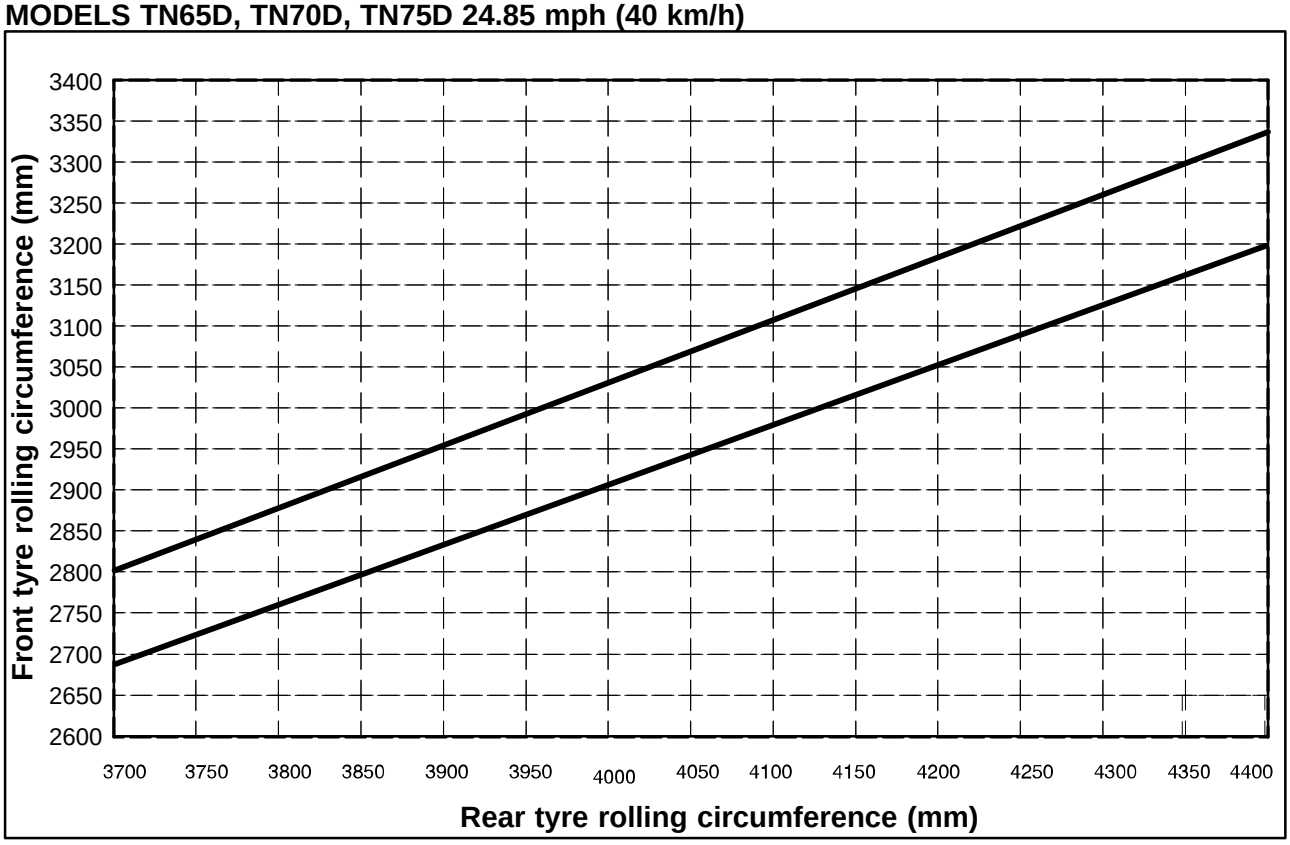

173

MODELS TN65S, TN70S, TN75S 18.64 mph (30 km/h)

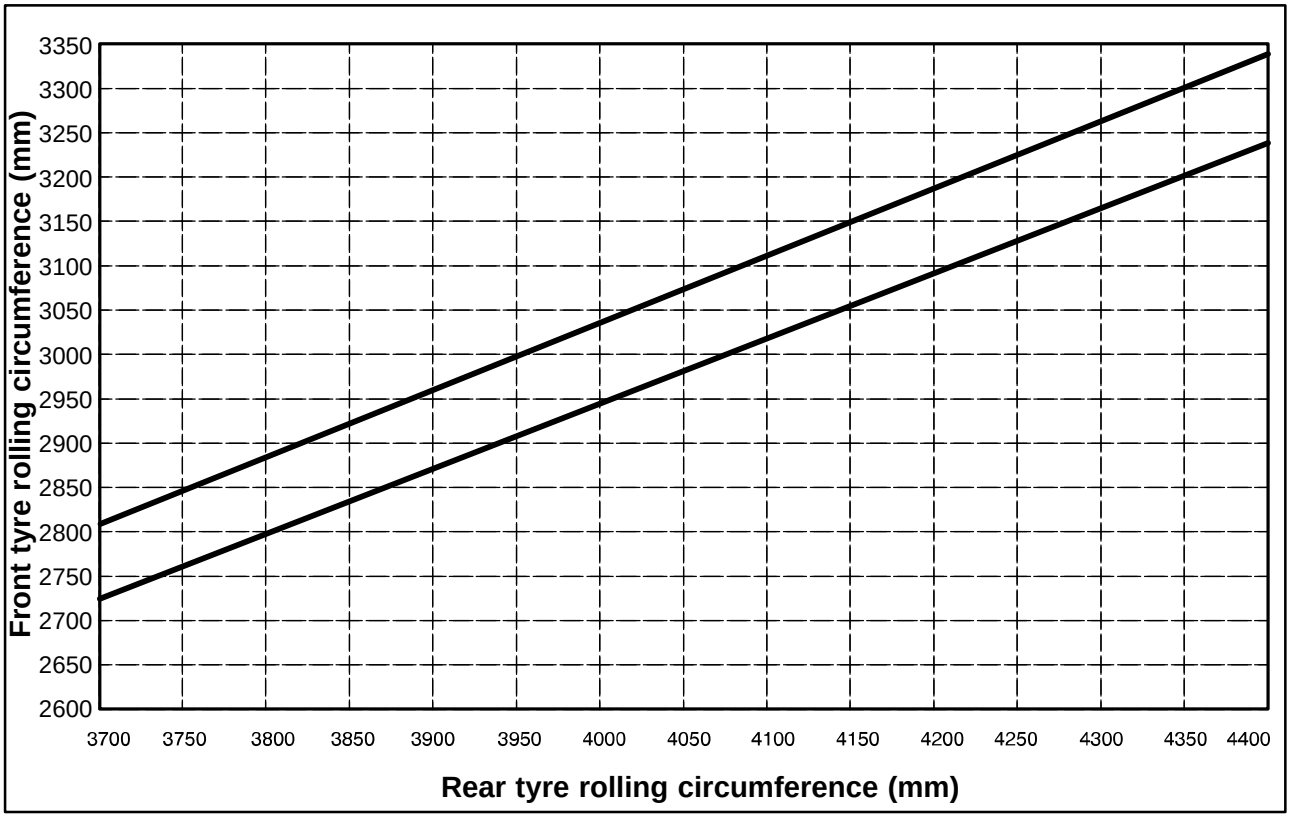

174

MODELS TN65S, TN70S, TN75S 24.85 mph (40 km/h)

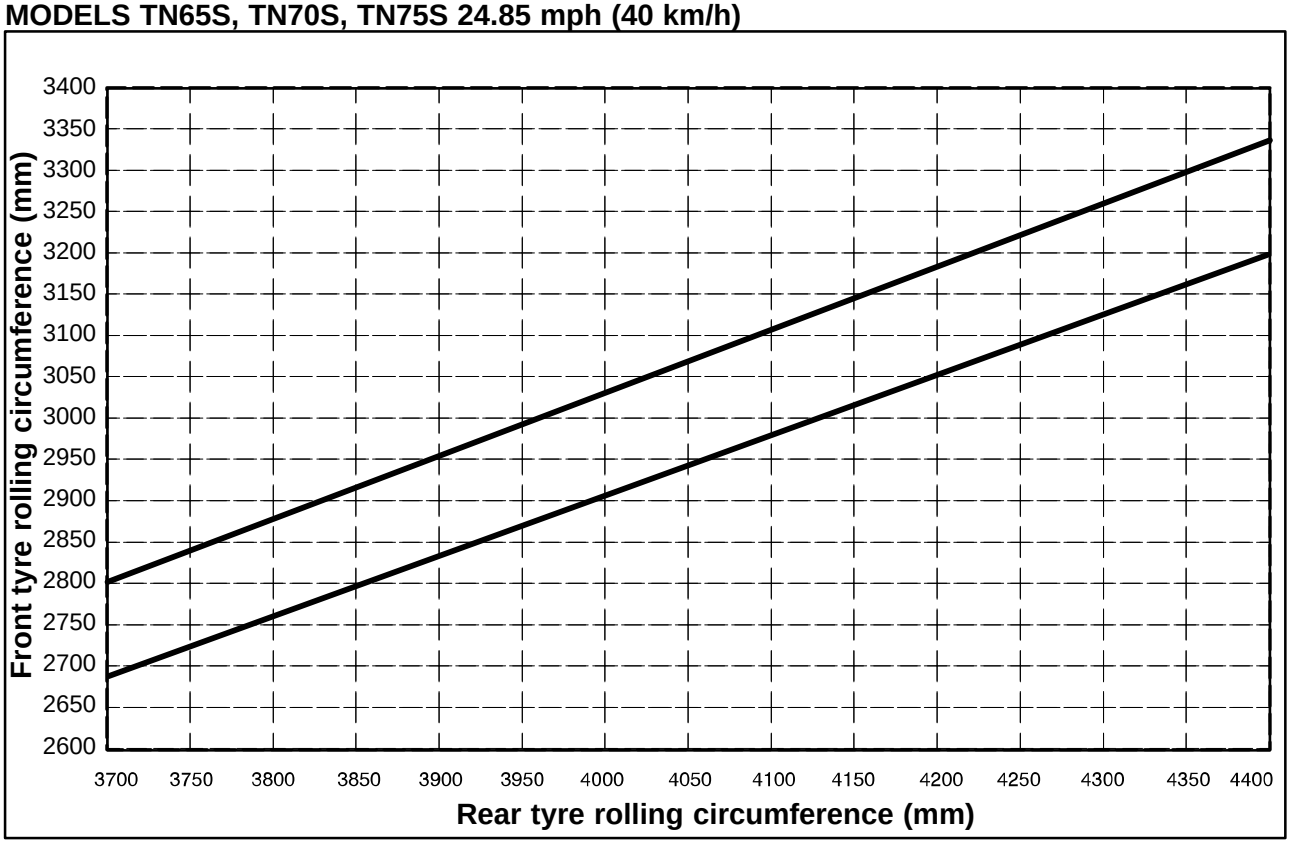

175

METAL BALLASTING

If the tractor requires high traction power, the drive wheels may slip due to insufficient grip on the ground, causing loss of power and speed, increased fuel consumption and premature tyre wear.

We therefore advise fitting cast−iron rings as ballast on the drive wheels, or ballasting wheels with cast iron discs.

When using very long and heavy implements which could affect the longitudinal stability of the tractor, ballast the front axle by fitting the appropriate cast−iron counterweights.

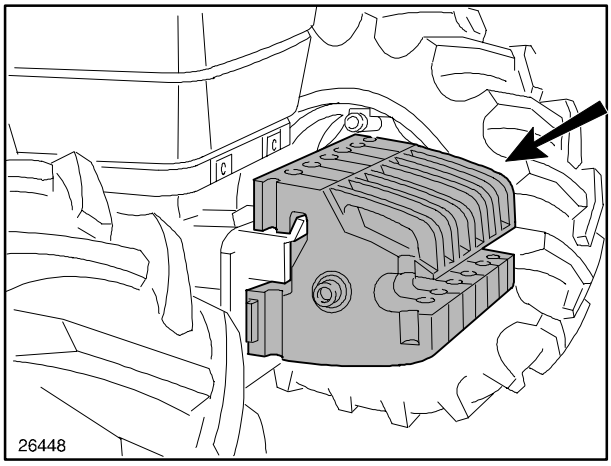

176

Front end weights − Fig. 176

Front axle TN−D 2WD − 4WD

4 or **6** cast−iron counterweights with **88.18 lbs. (40 kg)** handles and relative support bracket weighing **132.27 lbs. (60 kg)**, making a total of **485 lbs. (220 kg)** or **661.38 lbs. (300 kg)**.

Front axle TN−S (Super−Steer)

4 or **6** cast−iron counterweights with **88.18 lbs. (40 kg)** handles and relative support bracket weighing **55.11 lbs. (25 kg)**, making a total of **408 lbs. (185 kg)** or **584.22 lbs. (265 kg)**.

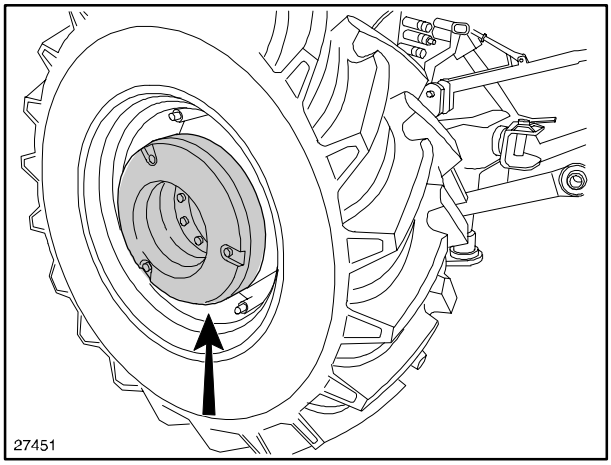

177

Rear wheel ballasting − Fig. 177

4 cast iron rings (2 per wheel) or **6 cast iron rings** (3 per wheel) **110.23 lbs. (50 kg)** each, making a total of **441 lbs. (200 kg)**, or **661.38 lbs. (300 kg)**.

LIQUID BALLASTING

WATER INLET AND OUTLET CONNECTORS − Fig. 124

1 Water inlet connector.

2 Water drainage pipe.

3 Air pipe connector.

4 Water drainage pipe.

If there is no danger of freezing, water can be used to ballast the rear tyres.

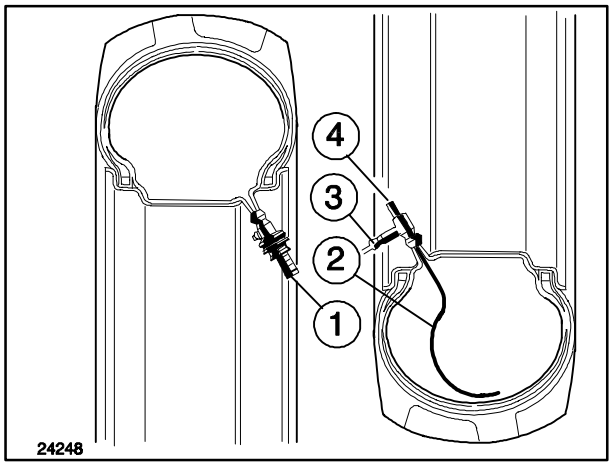

178

FILLING THE TYRES WITH WATER:

− raise the wheel from the ground and position the inflation valve at the highest point;

− unscrew the inner part of the valve and wait until the tyre deflates;

− lower the wheel until the tyre is depressed by approximately 30%, to prevent the weight of the water from damaging the inner tube;

− screw the NEW HOLLAND connector (no. **291885**) onto the valve and attach the water pipe to the connector (**1**), remembering to detach the pipe to release air when the tyre begins to inflate;

− the tyre is 75% full when water starts to flow out of the connector (**1**).
If less water (less weight) is required, turn the wheel so that the valve is positioned at a lower point;

− remove the connector (**1**), screw on the air valve and inflate the tyre to the specified pressure.

CAUTION*: *The water pressure must never exceed 58.01 psi (4 bar).

DRAINING WATER FROM THE TYRE:

− raise the wheel from the ground and position the inflation valve at the lowest point;

− unscrew the valve seal component and drain off the water;

− screw the NEW HOLLAND connector (no. **291886**) onto the valve, tubes (**2**) and (**4**) will make contact with the inner tube;

− introduce pressurised air into the connector (**3**), the remaining water will drain out through pipes (**2**) and (**4**);

− remove the connector, replace the valve seal component and inflate the tyre to the specified pressure.

FILLING WITH WATER

The quantity of water required for each tyre is approximate.

(1) The water quantities for each tyre shown in the table may vary according to the different tyre manufacturers.

FILLING THE TYRES WITH ANTI−FREEZE SOLUTIONS

In order to prevent freezing water from damaging the tyres, instead of using pure water, use a solution of neutralised calcium chloride (in flakes). Prepare the solution by placing the water in a container and gradually pouring in the calcium chloride, whilst continually mixing. The quantities of water and chloride required to produce the anti−freeze solution, to fill each tyre to 75%, are shown in the table below.

DANGER: *Always add the chloride to the water. Wear safety goggles when preparing the solution. Pouring water into the chloride can be dangerous.*

Rear tyres

Tyres	Water litres **(1)** (USA gals)	Calcium chloride kg (lbs)
12.4−32	116 (30.6)	46 (101.41)
12.4−36	125 (33.02)	49 (108.02)
380/70R28	125 (33.02)	49 (108.02)
13.6R28	139 (36.71)	55 (121.53)
13.6−28 R1	139 (36.71)	55 (121.53)
14.9R28	155 (40,94)	61 (134.48)
14.9−28 R1	155 (40,94)	61 (134.48)
420/70R28	159 (42.0)	63 (138.88)
14.9R30	174 (45.96)	68 (149.91)
420/70R30	220 (58.11)	87 (191.80)
16.9−R30	215 (56.79)	85 (187.39)
16.9−30 R1	215 (56.79)	85 (187.39)
480/70R28	227 (59.96)	95 (209.43)
16.9−28 R1	206 (54.41)	87 (191.80)
16.9−24 R1	197 (52.04)	83 (182.98)
16.9−24 R3	197 (52.04)	83 (182.98)
16.9−24 R4	197 (52.04)	83 (182.98)
16.9−30 R1	215 (56.79)	85 (187.39)
18.4−16.1 R3	159 (42.0)	67 (147.70)
14.9−24 R4	129 (34.07)	51 (112.43)

The filling values with water and anti−freeze for temperatures up to −13 °F (−25 °C) shown in the table are only guidelines, and may vary according to the tyre brand. Consult skilled personnel for ulterior information.

CAUTION: Do not use tyres ballasted with liquid when driving on roads.

CAUTION: For correct filling operations, consult the manufacturer’s specialised personnel of the tyres fitted on your tractor.

MAXIMUM PERMITTED WEIGHTS

Correct static weight distribution guarantees maximum tractor efficiency and productivity, and extends the service life of the tractor components.

CAUTION: *The total weight of the tractor, including all types of ballast and the weight of mounted implements, must not exceed the limits noted in the table below.*
The values refer to the permissible axle weight.
For tyre load capacities, observe the data on page 2−146.

Working with excessive ballast on the tractor may cause:

- reduction in available power to operate the implement connected, leading to reduced productivity;
- increased fuel consumption;
- premature tyre wear;
- excessive compacting of the ground;
- damaging overload of the transmission components, leading to an increase in running costs.

When using the tractor in the field, it is extremely important to have the maximum power available for using implements; therefore avoid losing power through excessive ballast.

Maximum permitted weight with all speeds and wheel tracks (without limitations)

Model	Maximum operating weight with implement mounted kg (lbs) (*)		Maximum permissible axle weight		
	2WD	FWD MODELS	Front axle 2WD kg (lbs)	Front axle 4WD kg (lbs)	Rear axle kg (lbs) (o)
TN55	4000 (8818)	4200 (9529)	2000 (4409)	2000 (4409)	3000 (6613)
TN65	4400 (9700)	4800 (10582)	2000 (4409)	2200 (4850)	3500 (7716)
TN70	4400 (9700)	4800 (10582)	2000 (4409)	2200 (4850)	3500 (7716)
TN75	4400 (9700)	4800 (10582)	2000 (4409)	2200 (4850)	3500 (7716)

(o) Permissible weights given for the rear axle, are for tractors with ballast, including mounted implements raised off the ground.

(*) Maximum tractor weight with mounted implement raised off the ground.

Maximum permitted weight at 4.97 mph (8 km/h) on front axle with front loader

Model	Maximum permitted wheel track mm (in) < /=	Maximum permitted wheel track mm (in)	Front axle 2WD (*) kg (lbs)	Front axle 4WD (*) kg (lbs)	Rear axle (o) kg (lbs)
	2WD	4WD MODELS			
TN55	1560 (61.41)	1240 ÷ 1470 (48.81 to 57.87)	3000 (6613)	3000 (6613)	3000 (6613)
TN65			3000 (6613)	3500 (7716)	3500 (7716)
TN70			3000 (6613)	3500 (7716)	3500 (7716)
TN75			3000 (6613)	3500 (7716)	3500 (7716)

(*) The permissible static weights given for the front axle of both 2WD and 4WD models are for tractors fitted with a front loader.

(o) Permissible static weights given for the rear axle, are for tractors with ballast, including mounted implements raised off the ground.

FRONT LOADER

The permissible maximum weights on axles are determined by the statically measured maximum weight that the axle can sustain.

For the front loader, refer to the maximum permitted weights limited to 4.97 mph (8 km/h) and with two minimum wheel tracks.

The maximum permitted weight on the tyre must also be taken into consideration, therefore consult the manufacturer.

If a ballast is applied to the rear implement hitch (or an implement) with the centre of gravity of the ballast positioned behind the link end at **2.00 ft (0.610 m)**, the maximum weight must not exceed the following values:
TN55D/S_____**661.4 lbs. (300 kg)**;
TN65D/S_____**1102 lbs. (500 kg)**;
TN70D/S_____**1102 lbs. (500 kg)**;
TN75D/S_____**1102 lbs. (500 kg)**.

When the weight exceeds these values, the **2.00 ft (0.610 m)** measurement must be reduced, using the following formula:
TN55D/S
− permitted distance in ft = 1018.7/ mass of ballast, in Ibs (310.5/ ballast weight in kg) − 1.394 (0.425 in meters).
TN65D/S, TN70D/S and TN75D/S
− permitted distance in ft = 1696.2/ mass of ballast, in Ibs (517/ ballast weight in kg) − 1.394 (0.425 in meters).

WARNING: *To guarantee maximum transmission working life, a speed/gear combination must be used to* ***avoid total link end slipping*** *at speeds less than 2.48 mph (4 km/h).*

STATIC WEIGHT DISTRIBUTION ON THE TRACTOR − Fig. 179

Fitting implements on the front and back of the tractor alters the weight distribution on the axles.

WARNING: *With mounted implements fitted to the rear of the tractor, it is good practice to fit a minimum* ***20%*** *extra weight on the front axle.*

Add or remove ballast from the tractor once it is fully equipped, until a balanced static weight distribution is achieved for the type of implement in use. Take care not to exceed the maximum operating weights shown on a page 2−159.

The weight distribution percentages given for four−wheel drive models are only ***guidelines*** and relate to the total weight of the fully equipped tractor, complete with ballast.

WARNING: *Do not use ballast systems other than those indicated.*
Do not ballast the tractor unnecessarily: not only is it superfluous, it may also damage the tractor.

FOUR−WHEEL DRIVE MODELS

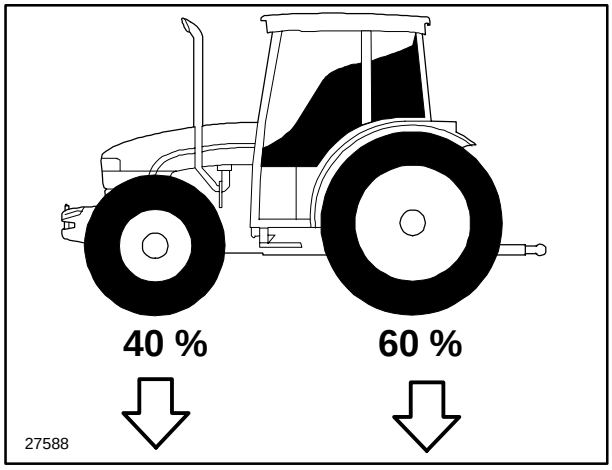

179

STEERING WHEEL ADJUSTMENT

HEIGHT ADJUSTMENT − Fig. 180

The steering wheel is equipped with a height adjustment knob.

To adjust the height, use the knob (**1**) and position the steering wheel at the desired height. Then tighten the knob (**1**) to secure the steering wheel.

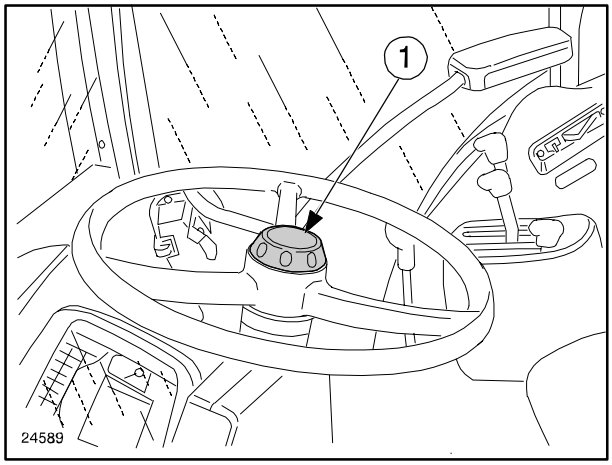

180

ANGLED ADJUSTMENT − Fig. 181

The angle of the steering wheel can be adjusted by means of a lever.

Use the lever to make the required adjustment (**1**). On completion of the adjustment, lock the steering wheel in position.

− lever down = steering wheel locked.

− lever up = steering wheel released.

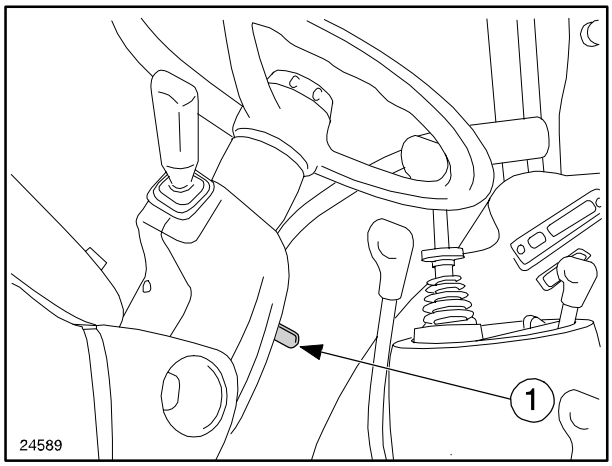

181

SEAT ADJUSTMENT

We advise you to adjust the seat for safe driving, even under difficult conditions. To avoid danger, follow the instructions below.

- do not adjust the seat when the tractor is moving;
- the driver's seat must only be fitted and repaired by skilled personnel;
- periodically check that the securing screws are tight and that the adjustment controls are working correctly in order to ensure safety and stability when working.

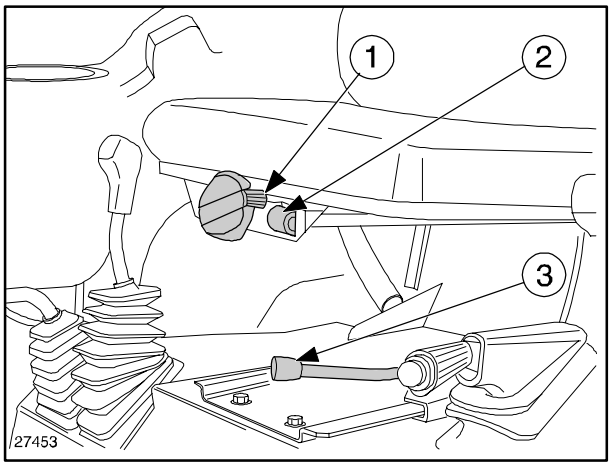

182

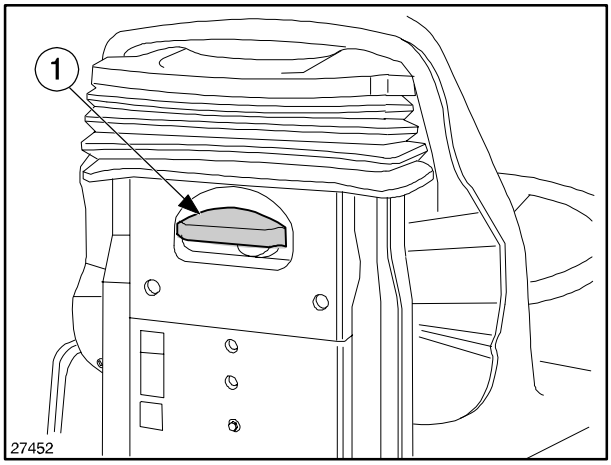

183

The driver's seat has adjusters for its suspension, height and distance from the controls.

You can therefore select the most suitable position for driving, and even change it while working.

Seats for models fitted with roll bars

Suspension adjustment − Fig. 182

Seat suspension can be adjusted by means of an extractable handle (**1**).
Turn the handle until your approximate weight is shown on the scale in the window (**2**).

Adjustment of distance from control panel − Fig. 182

From the driver's seat, pull the lever (**3**) fig. 182 sideways and move the seat forwards or backwards.

After moving the seat, release the lever and check that the seat is locked in the correct position.

Seat height adjustment − Fig. 183

To adjust seat height, pull the handle (**1**) fig. 183 *upwards.* Raise the handle with one hand whilst raising or lowering the seat with the other hand. The seat will lock in position when the handle is released.

Seats on models with cabs − Fig. 184

Suspension adjustment

Seat suspension can be adjusted by means of a handle (**1**).
Turn the handle until your approximate weight is shown on the scale in the window (**4**).

Adjustment of distance from control panel

From the driver's seat, pull the lever (**2**) upwards and move the seat forwards or backwards.

After moving the seat, release the lever and check that the seat is locked in the correct position.

Seat height adjustment

To adjust seat height, turn the knob (**3**) to one of the three positions marked on the knob.

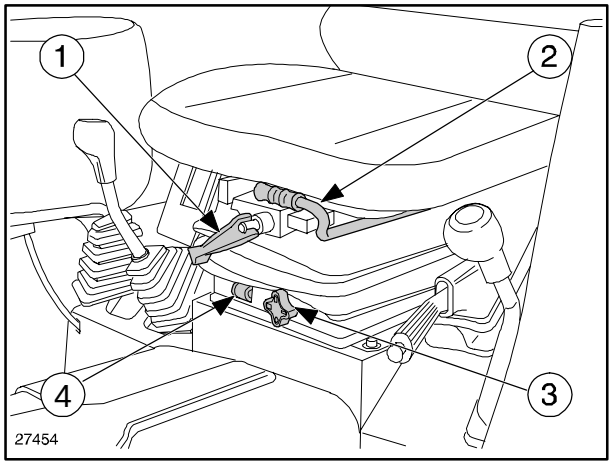

184

PNEUMATIC SEAT

Adjustment of distance from control panel

From the driver's seat, pull the lever (**2**) upwards and move the seat forwards or backwards.

Pneumatic suspension adjustment

From the driver's seat, pull the button (**2**) outwards until the seat is fully lowered.
Turn the starter key to the starting position and press the button (**2**), keeping it pressed until the desired height is reached.
Once the adjustment is completed, check that the window (**1**) is green. If yellow, press the button (**2**) to slightly lower the seat until the window displays green.

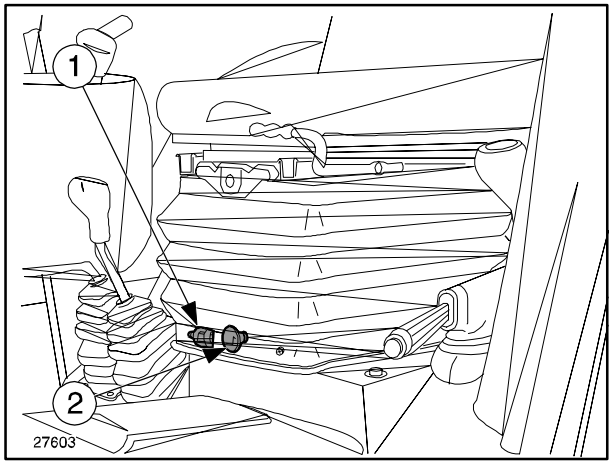

185

SEAT BELTS WITH INERTIA REEL − Fig. 186

To fasten the belt (**1**) pull the buckle out of the inertia reel and insert the tongue (**2**) in the slot (**3**).

NOTE− *The belt adjusts automatically to the driver's body.*

To release, press the button (**4**) and release the belt. The belt reels in automatically.

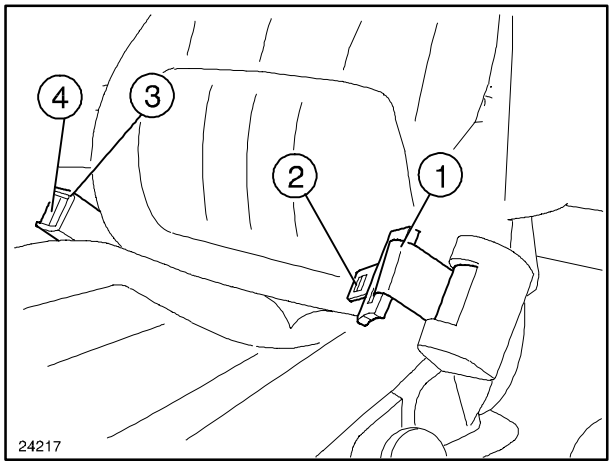

186

HEATED AND VENTILATED CAB

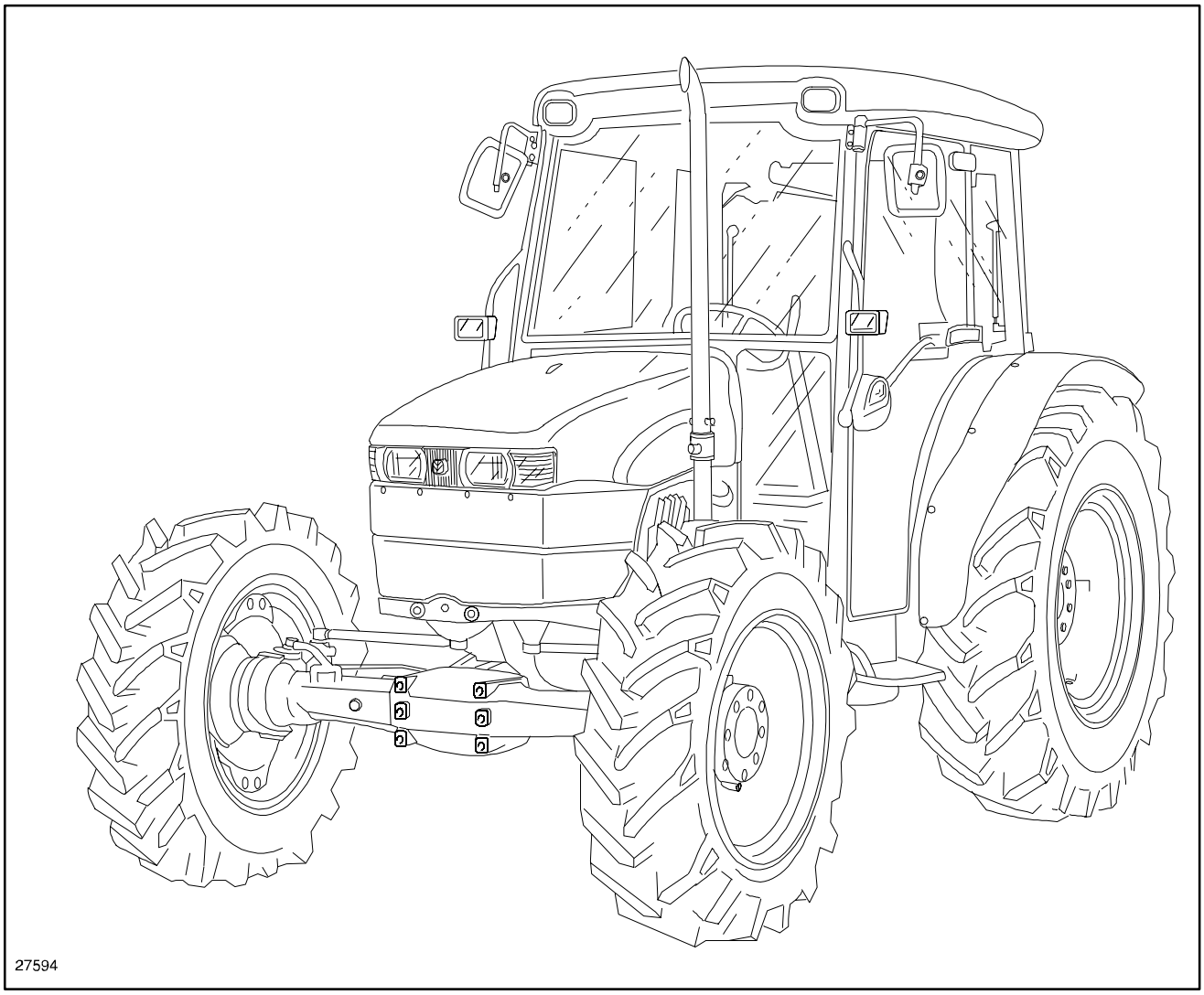

187

This section of the manual deals only with the use of the heated and ventilated cab.

DOORS

Opening the doors from the outside − Fig. 188

With the door unlocked, press the button (**1**) and pull the door towards you.
The opening buttons (**1**) are both fitted with lock and key, so the cab can be locked from the left and right−hand sides.

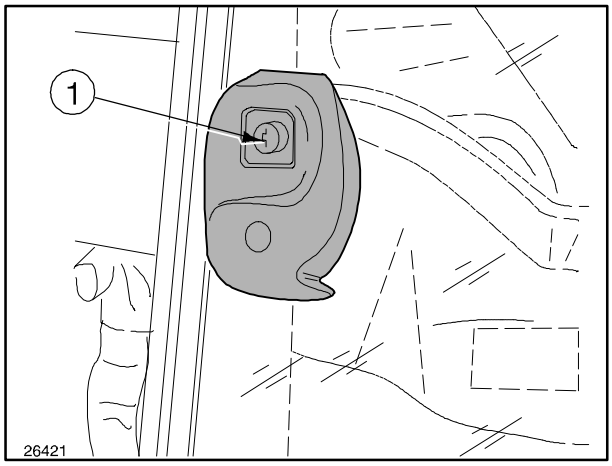

188

Opening the doors from the inside − Fig. 189

Pull the lever (**1**) upwards.

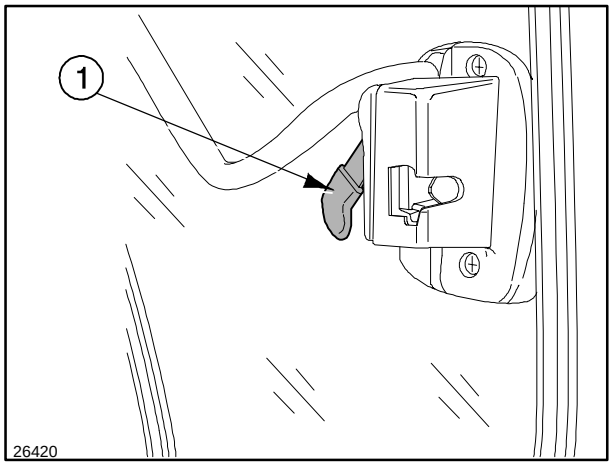

189

FRONT WINDSHIELD − Fig. 190

To open, pull the handles (**1**) and push the windshield forward.
The windshield will be held in position by struts or it may also be opened to the minimum position by locking the lever (**1**) in the slot, as shown in the figure.

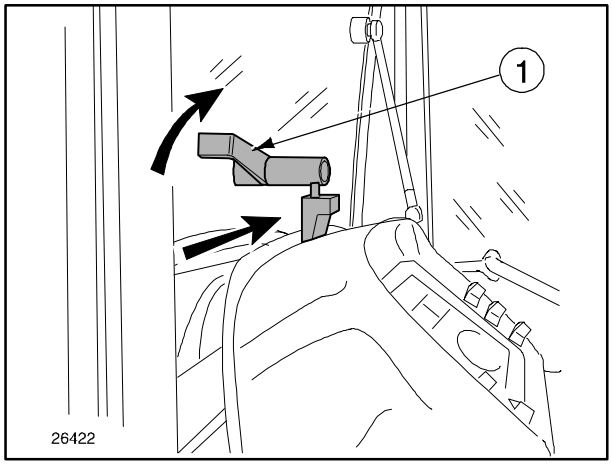

190

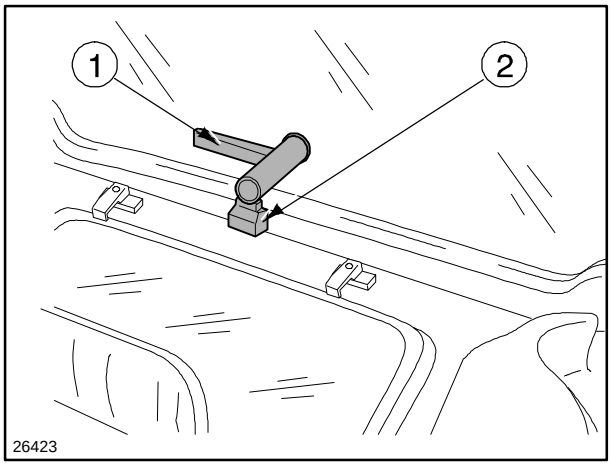

191

REAR WINDOW − Fig. 191

To open, pull the handle (**1**) and push the window forwards.
Retaining devices will hold the window in the open position.

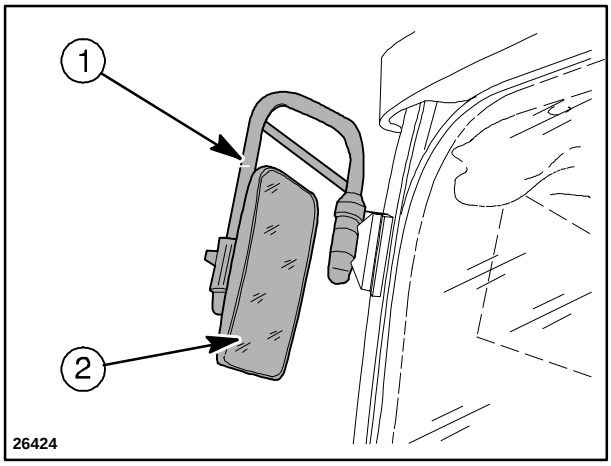

192

EXTERNAL REAR VIEW MIRROR − Fig. 192

The mirror can be adjusted in two different ways, as described below:

- rotate the support bracket (**1**) on its own axis to adjust the angle of the mirror;
- rotate the mirror (**2**) to obtain the best rear view.

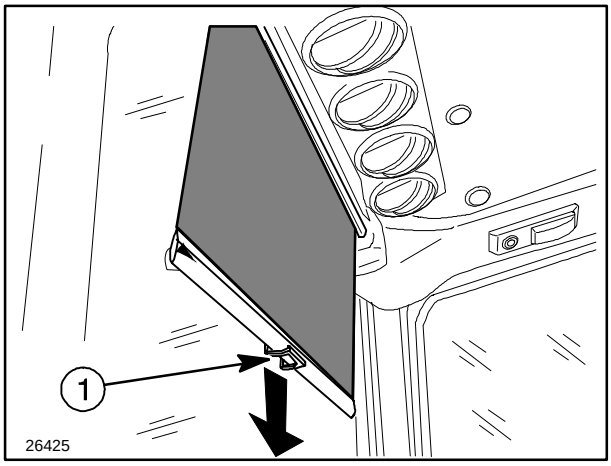

193

SUNSHIELD − Fig. 193

To use the sunshield, pull down the handle (**1**) as indicated by the arrow in the figure.

To roll the sunshield up again, push it upwards by hand.

NOTE: *All controls are operational when the starter key is in position (**B**) page 2−4. The operating positions are shown in fig. 195.*

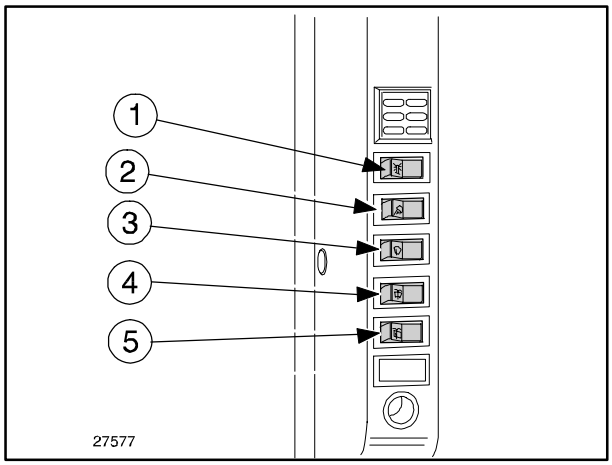

194

ROTATING BEACON SWITCH (1)

The switch has two positions:

- Position **D** = rotating beacon ON;
- Position **E** = beacon OFF.

WORK LIGHTS CONTROL BUTTON (2)

- Position **A** = lights OFF;
- Position **B** = rear lights ON, front lights OFF;
- Position **C** = front and rear lights ON.

FRONT SCREEN WIPER SWITCH (3)

- Position **A** = OFF;
- Position **B** = first speed;
- Position **C** = second speed.

FRONT WINDSHIELD WIPER SWITCH (4)

To switch on the windscreen washer, press button (**2**).
When released, the button will automatically return to the neutral position.

REAR SCREEN WASHER/WIPER (5)

- Position **A** = OFF;
- Position **B** = wipers ON;
- Position **C** = wipers and washers ON, when released the switch will automatically return to position **B**.

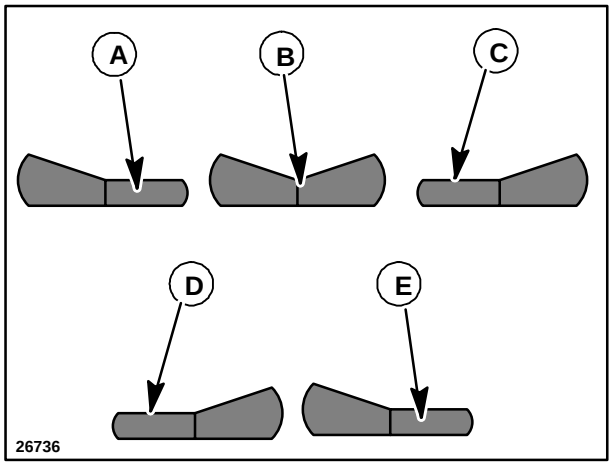

195

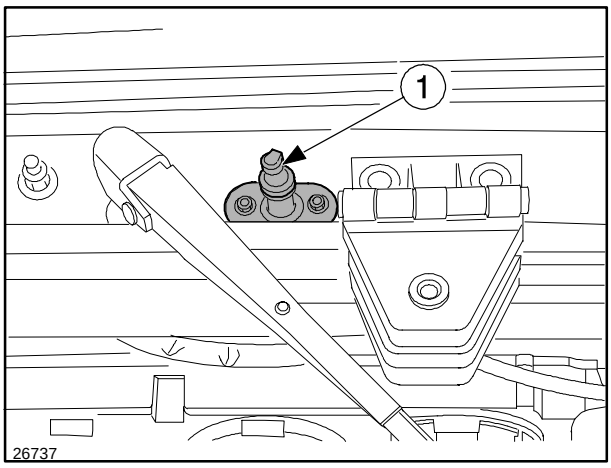

196

WINDSCREEN WIPER SPRAY NOZZLE − Fig. 196

For better windscreen cleaning, adjust the angle of the spray nozzle (**1**) using a screwdriver.
If the water spray is obstructed, clean the outlet hole with a pin.

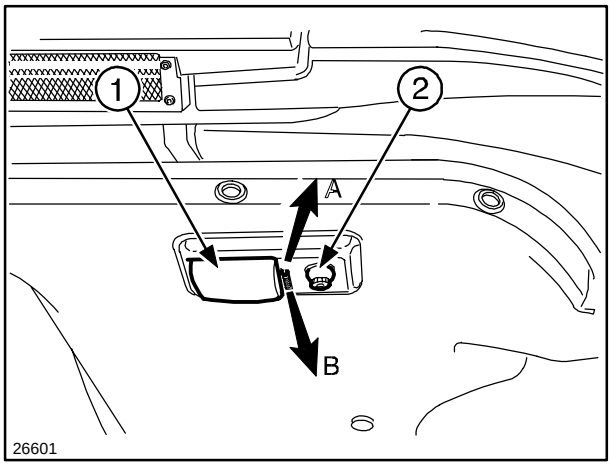

197

INTERIOR CAB LIGHTING − Fig. 197

The lighting system includes a courtesy light (**1**) and an adjustable reading light (**2**), both lights are operative when the starter key is in position (**B**) page 2−4.

The interior lighting system is controlled by a three−position switch:

- position **A** = courtesy light (**1**) ON;
- central position = lights OFF;
- position **B** = courtesy light (**1**) OFF and reading light (**2**) ON.

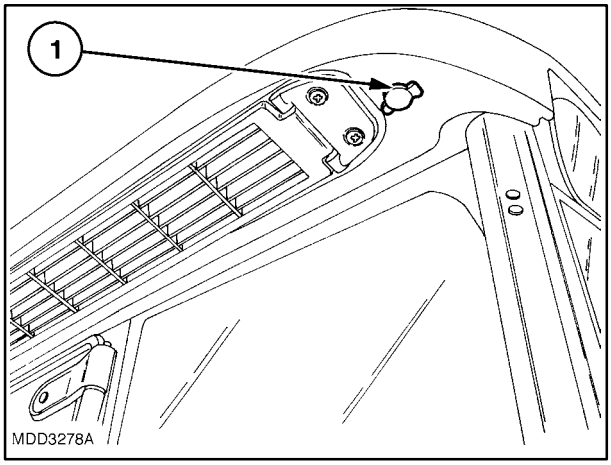

198

POWER SOCKET FOR ROTATING BEACON − Fig. 198

The rotating beacon must be used when driving on the road. Plug the beacon into the power socket (**1**).

VENTILATION

Operate the ventilation unit by means of the switch (**1**) fig. 199 and direct the air flow by adjusting the front swivel vents (**2**) fig. 199.

Air can be taken from outside or from inside the cab by adjusting the side air re−circulation vents (**1**) fig. 200 which have two positions.

− Vents closed: air comes from outside via the side filters.

− Vents open: a larger quantity of air comes from inside via the vents themselves.

The air entering the cab is always filtered.

When the electric fan is operating and with the doors, re−circulation vents and windows closed, the pressure inside the cab is higher than the pressure outside, and consequently air can only enter the cab via the side filters.

NOTE: *To increase cab pressure, air must only be taken from the outside (air re−circulation vents (**1**) fig. 200 closed).*

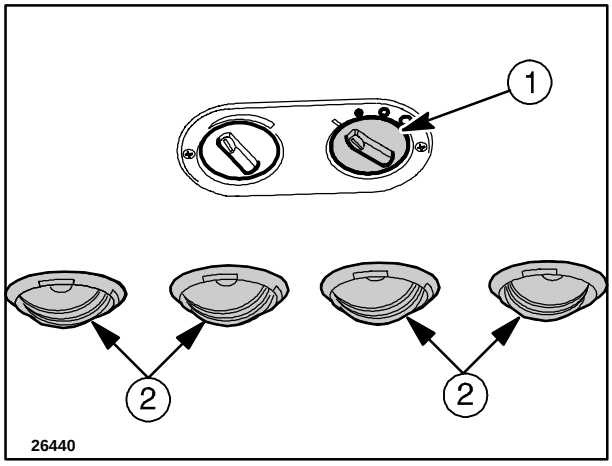

199

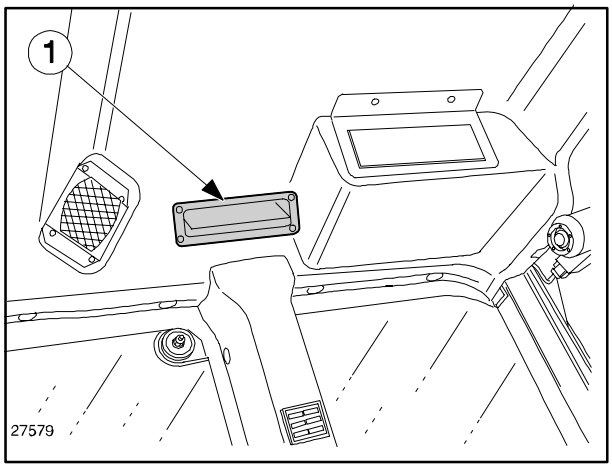

200

Electric fan.

The electric fan switch (**1**) fig. 201 is powered up when the starter key is in position **B** (see page 2−4).

A. Low speed.

B. Medium speed.

C. High speed.

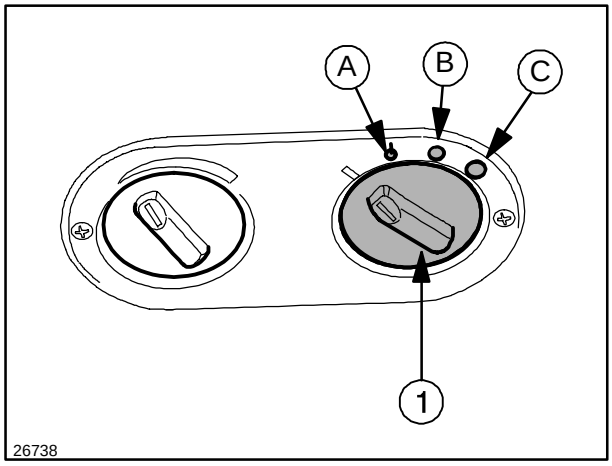

201

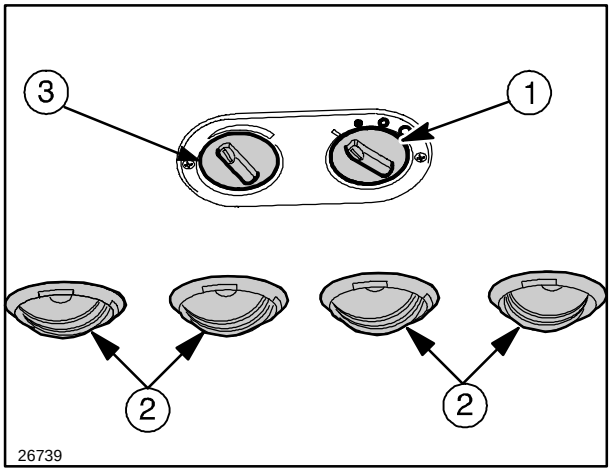

202

NOTE: *The total capacity of the cooling system and the coolant specifications are shown on page SENZA CODICE.*

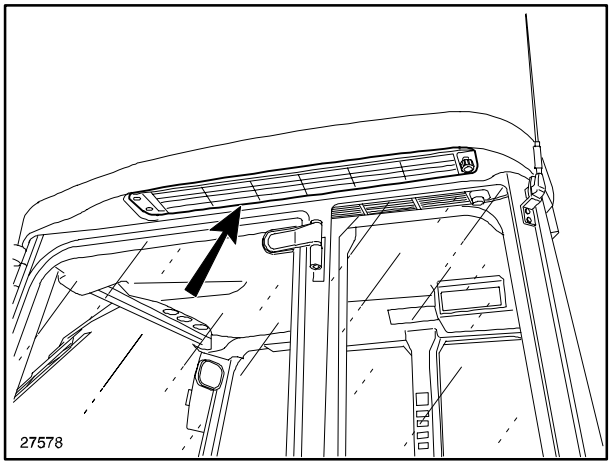

203

HEATING − Fig. 202

The hot air temperature can be adjusted by means of the knob (**3**) By reducing or increasing the circulation of coolant from the engine, with the electric fan (**1**) the quantity of air entering the cab through the vents (**2**) can be varied. By turning the temperature adjustment knob (**3**) counter clock−wise (fully to the left), the circulation of hot air in the cab is interrupted; by turning the knob clockwise (fully to the right), maximum cab air temperature is selected.

Air filter − Fig. 203

DANGER: *Remember that the cab air filters* ***do not generally protect against*** *pesticides. Total protection against these substances can therefore only be ensured by taking the necessary precautions according to the properties of individual products. These precautions must be taken for all filter types, observing both the instructions for use and maintenance regulations. Active carbon filters are available on request, providing greater protection against the harmful effect of pesticides.*
However, even the use of active carbon filters ***does not remove the need*** *for the specific personal precautions required for the use of individual products.*
These filters should ***only*** *be fitted when working with pesticides and* ***replaced*** *with the normal paper filters at the end of work.*
Do not *use these filters during other work, as dust will accumulate and clog the filters.*
When replacing the active carbon filters at the end of work, return them to the original package, making sure they are carefully sealed. Observe the instructions on the package, the filters last for approximately ***60 hours of work. They must be replaced every year.***
If, when working with pesticides, toxic odours are noted, ***stop work*** *immediately and check the condition of the filters,* ***replacing if necessary****.*
Old filters must neither be washed or cleaned with compressed air.
Discarded filters must not be thrown away. Take old filters to authorised collection points.

AIR CONDITIONED CAB

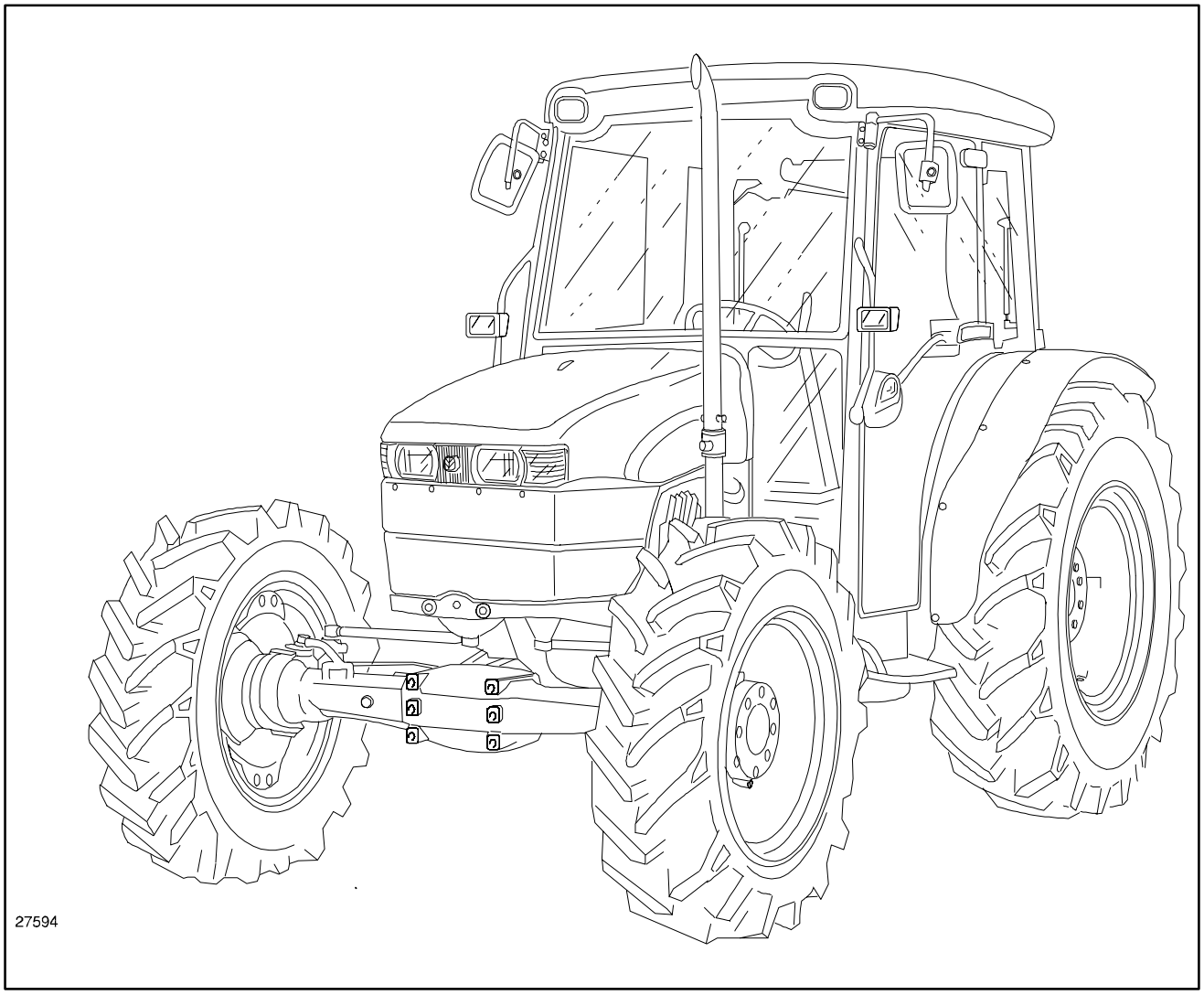

204

This section of the manual describes the operation and use of the cab version fitted with an air conditioning system.

This system, in addition to ensuring optimum temperature inside the cab, reduces air humidity, which might otherwise be a nuisance to the operator and compromise tractor handling safety.

The cab is also fitted with windows which reduce the effects of the sun's rays inside the cab, which in hot weather create particularly unpleasant conditions for the operator.

SAFETY RULES

The air conditioning system is safe and can be used continuously without any risk. However, it is important to observe a few simple precautions, listed below, to avoid any risk of accident.

■ It is advised never to personally attempt to adjust the system; any repair work should be carried out by the experienced technicians of the NEW HOLLAND Service Network.

■ Never allow open flames near the air conditioning system, as if there is a leak of coolant, a lethal gas ***(phosgene)***.

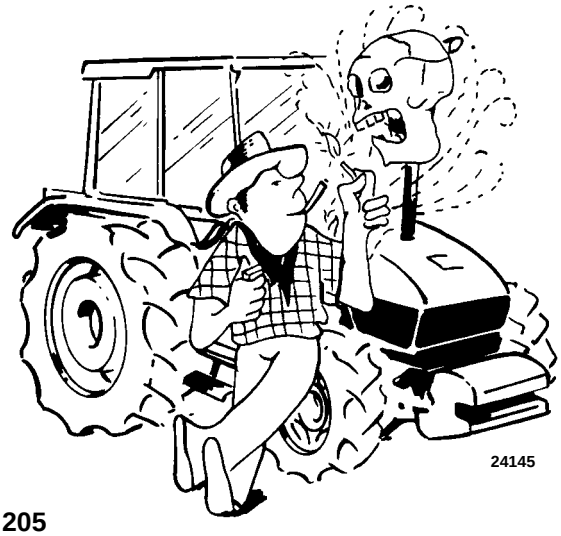

205

■ The oil and coolant mixture is pressurised inside the air conditioning system. Loosening of any connections or handling of tubing is therefore strictly prohibited. For the same reason, never unscrew the compressor oil level inspection cap under any circumstances.

206

■ The coolant can freeze the skin and, above all, the eyes. If an accident should occur, proceed as follows:

- if coolant comes into contact with the eyes, wash immediately with a few drops of mineral oil, then continue washing thoroughly with a solution of boric acid and water (one teaspoon of acid in $^1/_4$ of a cup of water) and consult a doctor at once;
- freezing caused by coolant can be treated by gradually unfreezing the injured zone with cold water and then applying a grease based cream. Consult a doctor immediately.

■ Do not allow the air conditioning system to approach any heat source, in order to prevent an explosion risk.

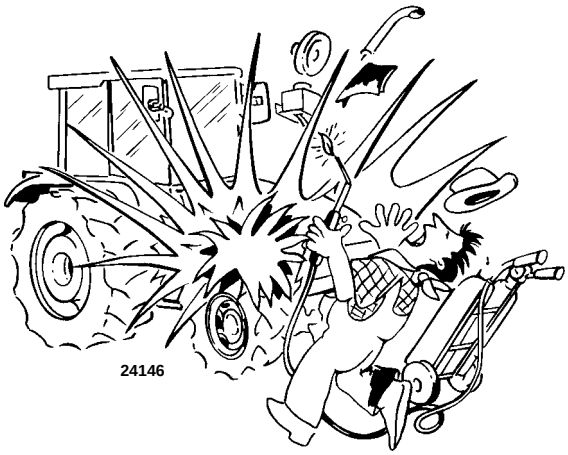

207

AIR CONDITIONING CONTROLS

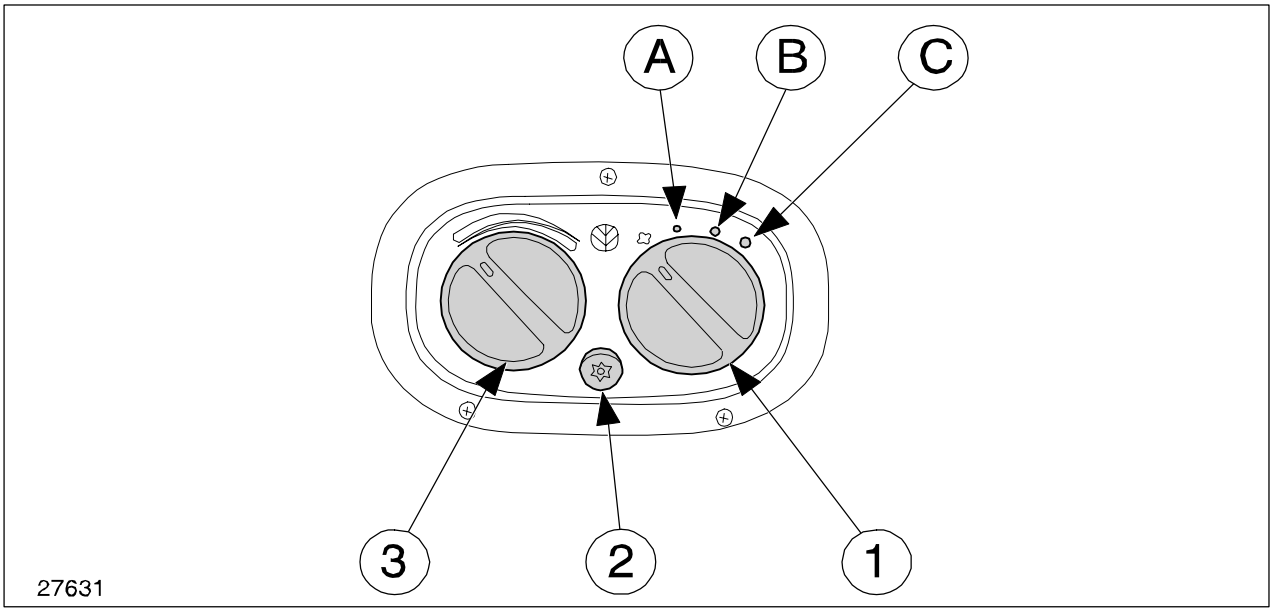

208

AIR CONDITIONING AND TEMPERATURE CONTROL

Air conditioning push button.

Operates with the starter key in the start position.

With the electric fan knob (**1**) in positions **A**, **B** or **C**, press push button (**2**) to switch on the air conditioning.

Heater control knob.

For maximum temperature, turn the knob (**3**) clockwise (fully to the right). To shut off the water supply to the heater and switch off the heater, turn the knob (**3**) fully counter−clockwise.

Electric fan control.

Operates with the key in position **B** (see page 2−4).

A. Low speed.

B. Medium speed.

C. High speed.

NOTE: *To pressurise the cab, see the heading "Ventilation" on page 2−169.*

AIR CONDITIONING SYSTEM INSTRUCTIONS FOR USE

The air conditioning system provides dehumidified cool air or dehumidified hot air.
To use the system, proceed as follows.

WARNING: *When the engine is not running, the air conditioner will not work because the compressor is driven by the engine.*

STARTING

With the engine running and the electric fan ON, press button (**2**) fig. 208 to start the air conditioner.

WARNING: *Always switch on the electric fan before starting the air conditioner.*
With the fan OFF, the air conditioner will not work.

After running for a few minutes, the inspection window on the top of the dehydrating filter should be clear and not contain any bubbles. If this is not the case, stop the system and contact your dealer.

ADJUSTMENT

For a correctly air conditioned cab, open the re−circulation vents when the air conditioning is running, and keep the doors, roof and the rear window closed. To lower the temperature in the cab and, at the same time, reduce the air humidity, turn the knob (**3**) fig. 208, counter−clockwise until the desired temperature is reached.

WARNING: *Before starting the engine, check that the air conditioning is OFF.*

NOTE: *When working in very dusty environments, the cab pressure may have to be increased to prevent dust from entering the cab; it is also advised to close the re−circulation vents.*

If only the dehumidification function on the air conditioning system is required, without lowering the air temperature, turn the knob (**3**) fig. 208 clockwise until the desired temperature is obtained.

To restore the temperature in the cab after a prolonged halt in the sun, start the tractor, switch on the air conditioning and after about a minute open the rear fanlight or the roof to let the hot air escape.

SWITCHING OFF

Before stopping the engine, always turn off the conditioner by pressing button (**2**) fig. 208 to the stop position and moving the electric fan control knob (**1**) fig. 208 to the OFF position.

REGULAR INSPECTIONS

At least once every three months:

- eliminate any foreign matter from the condenser and evaporator fins;
- check the tension of the compressor belt;
- run the engine at 1500 rpm and check the dehydration filter inspection window: it should be transparent and not contain any air bubbles or white liquid;
- check the condition of the tubing, connections and mounting brackets;
- check that the evaporator condensate discharge pipes are working efficiently;
- check that the fixing screws and nuts, pulleys and compressor are correctly tightened.

MAINTENANCE

During long periods of inactivity, run the air conditioning system for a few minutes every month to circulate the oil in the system and keep the seals in good condition.

Only run the system when the engine is warm and the temperature inside the cab has reached 68 °F (20 °C).

ANNUAL MAINTENANCE

Before starting to use the air conditioning again at the beginning of the season, have the following operations carried out by your New Holland assistance network:

- check the oil level in the compressor;
- check system pressure and add R 134 a gas, if necessary;
- drain the air conditioning system and replace the dehydration filter, only if strictly necessary;
- fill the system with R 134 a gas;
- check operation of system.

GENERAL CAB MAINTENANCE (ALL VERSIONS)

After completing external cab maintenance, as described on page 3−43, carry out the following inspections:

- periodically check that there is no water standing in areas covered with mats or padding.
- protect the hinges and locks on the doors, roof and opening windows with lubricants and water repellents.
- clean the windows with suitable detergents. If necessary, use sulphuric ether.
- remove the windscreen wiper blade and sprinkle talcum powder on the rubber surfaces.
- leave the doors or roof hatch partially open.

SPECIFICATIONS

Coolant . . . . . **R 134 a**

- Quantity . . . . . 0.80 kg

Compressor . . . . . SANDEN SD 5H11 6332

- Number of cylinders 5
- Displacement . . . . . 155 cm^3
- Oil type . . . . . SANDEN SP20
- Quantity . . . . . 0.15 kg)

NOTES

SECTION 3

LUBRICATION AND MAINTENANCE

INTRODUCTION

This section gives full details of the maintenance procedures required to keep the tractor in conditions of maximum efficiency. The lubrication and maintenance table on pages 3−5 and 3−6 provides rapid reference for this purpose. All operations are numbered to facilitate reference.

In addition to the normal maintenance operations listed, the following parts must be checked during flexible maintenance or during the first 50 hours of operation:

- Tightness of wheel nuts.
- Oil levels in hub and front axle casing − 4WD models only.

WARNING: *Park the tractor on level ground and, where possible, ensure that all of the hydraulic cylinders are fully extended before checking oil levels.*

SAFETY PRECAUTIONS

Read and follow all the safety precautions listed under the “Tractor maintenance” heading in the General Information section.

NOTE: *Dispose of all used fluids and filters in the correct manner.*

CAUTION: *Do not carry out checks, lubrication and maintenance operations or adjustments on the tractor with the engine running.*

HOW TO PREVENT SYSTEM CONTAMINATION

To avoid contamination when changing oil, filters, etc., always clean the area around the fill−up points, inspection and drainage plugs, dipsticks and filters. Before connecting auxiliary cylinders, make sure that the oil they contain is clean, that it has not deteriorated after long periods of storage and that it is of the specified type. To prevent dirt from entering, clean the lubrication point before lubrication. Clean excess grease after lubrication.

MAINTENANCE INTERVALS

The intervals suggested in the lubrication and maintenance table are to be followed under normal working conditions.

The intervals must be adapted to the environmental and working conditions. This means that intervals should be shorter in adverse working conditions (dampness, mud, sand, high dust levels).

LUBRICATION AND MAINTENANCE TABLE − Pages 3−5 and 3−6

The table lists the intervals at which routine checks, maintenance and/or adjustments should be carried out. Use the table for quick reference when carrying out maintenance on the tractor. The operations follow the order on the table.

RUNNING IN PERIOD

During the running−in period (approx. 50 hours of work), as well as the operations to be carried out after every “10 hours of work” and for the first 50 hours, it is also advised to:

- run the engine for a few minutes at low speed and allow it to idle after every cold start;
- do not let the engine run at minimum speed for extended periods;
- do not use the tractor continually for heavy work;
- follow the recommendations mentioned above after replacement of major parts.

CAUTION: *After the first 50 hours of work, replace the oil in the sump (operation no. 26) together with the relevant filter (operation no. 32) and the oil filter cartridge for the transmission and services (operation no. 30); on the Power−Shuttle/HI−LO version only, replace the hydrostatic steering and auxiliary services filter (operation no. 31).*

CAUTION: *The operations described in this section, carried out at the prescribed intervals, will ensure regular tractor operation. Remember to make the checks and adjustments (with variable frequency depending on environmental and working conditions) according to the intervals suggested by experience and good sense.*

TRACTOR REFUELLING

WARNING: *When handling diesel fuel, pay attention to the following:*
Do not smoke when near diesel fuel. Under no circumstances must petrol, alcohol, or a mixture of diesel or alcohol be added to the diesel, as this will considerably increase the risk of fire or explosion. In a closed container, such as a jerry can, these mixtures are more explosive than pure petrol. Do not use these mixtures. Furthermore, mixtures of diesel and alcohol are not recommended as they do not lubricate the fuel injection system adequately. Clean the area around the fill−up point and make sure that it is kept clean. Fill the tank at the end of every day to reduce the formation of overnight condensation. Never remove the cap or add fuel when the engine is running. While the tank is being filled, keep control of the filler nozzle. Never fill the tank completely. Leave room for an increase in volume. If the original tank cap is lost, replace with an original spare part cap and screw on tight. Clean up any fuel spillage immediately.

FUEL SPECIFICATIONS

Fuel quality is an important factor for engine performance and durability. Fuel must be clean, properly refined and must not corrode the fuel system parts. Ensure that good quality fuel is used from a reliable source.

FUEL STORAGE

Take all necessary precautions to ensure that stored fuel is not contaminated by dirt, water or any other substance.

- Store fuel in black iron drums, not zinc drums as the coating reacts with the fuel and forms compounds that contaminate the injection pump and injectors.
- Shelter the storage drums from direct sunlight and tilt them slightly so that sediment inside can be removed through the outlet pipe.
- To facilitate removal of water and sediment, fit a drainage plug at the lowest point on the opposite side to the outlet pipe.
- If the fuel is not filtered from the storage drum, use a funnel with a fine mesh gauze when filling the fuel tank.
- Organise fuel supplies so that summer fuel is not kept for too long and then used in winter.

REFUELLING

Before refuelling, clean the area around the filler cap to prevent foreign matter entering the tank. After refuelling replace the cap and tighten fully.

NOTE: *The fuel tank holds 75 litres.*

NOTE: *If the original tank cap is lost or damaged, replace with an original spare part cap.*

MISCELLANEOUS CHECKS

Check the following components regularly and, if faults are detected, contact your New Holland dealer to replace the damaged parts:

- steering linkage ball joints: check that there is no play in the ball joints and that the conical ends are securely in place; also check no grease is escaping from the protective hoods to the ball joints, and that the hoods are in good condition and show no signs of cracks;
- hydrostatic steering cylinder lines: the lines must not show signs of crimping, cracking or swelling of the external sheath; there must be no traces of oil between the pipe and the connector;
- handbrake lever: check that the ratchet locks securely.

WARNING LIGHTS

The tractor is fitted with warning lights to inform the operator of the operational condition of the machine. Some of these lights indicate faults (levels of engine oil, brake fluid, coolant, windscreen wash liquid, air filter clogging, etc.) that must be dealt with immediately.

FUEL INJECTION PUMP

During the warranty period, any work carried out on the injection pump must be exclusively performed by ***your local dealer's specialised personnel***. If the seal on the fuel pump ***is removed, the manufacturers*** cannot be held responsible under the terms of the warranty.

ENVIRONMENTAL CONSIDERATIONS

When the fuel tank requires filling or the oil needs topping up or changing, always remember to position a container for spillage under the part in question. The products used are pollutants therefore every effort should be made to prevent contamination of the surrounding environment.

ENGINE COOLING SYSTEM

It is advisable to change the coolant every two years, even if the total working time of 1200 hours has not been reached.

ACTIVE CARBON AIR FILTERS

NOTE: If active carbon air filters are used when working with pesticides, carefully read the instructions shown on page 2−170 section 2.

RADIATOR

For efficient cooling circuit operations, make sure that the radiator fins are not clogged.
Clean regularly, even several times per day, if the working conditions are particularly dusty.

TYRES

Always fit and remove tyres in a clean working environment. Avoid carrying out these operations on soil.
To help when fitting and removing tyres, never use grease but use only soap and water.
When fitting a new or used tyre, inflate to 50.76 psi (3.5 bar) to ensure the correct positioning of the bead. Then inflate the tyre to the working pressure.

TYRE PRESSURES

The recommended tyre pressures are shown in the tables on pages 2−133 and 2−134.
Remember that the values given may vary according to the following factors: tyres different to those fitted by the manufacturer, tractor ballast type, different conditions of use, etc. The tyre manufacturer will provide information concerning the most suitable pressures.
Do not forget to check the tyre working pressures regularly. The frequency of the checks will vary according to operational and climatic conditions.

ACCESS FOR INSPECTION AND MAINTENANCE

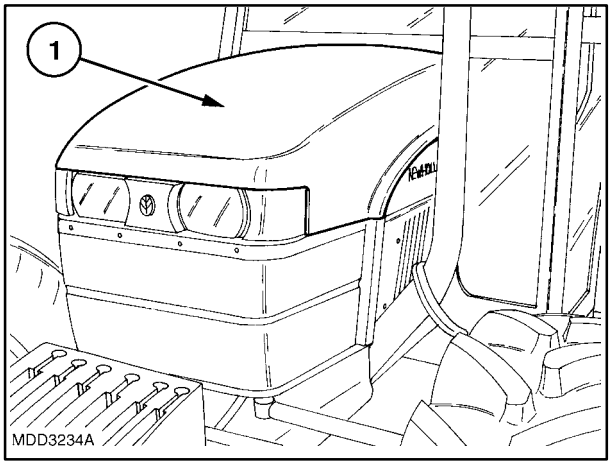

1

INTRODUCTION

To access the engine components and carry out inspection, lubrication and maintenance operations, the bonnet (**1**) fig. 1 must be opened.
Proceed as follows.

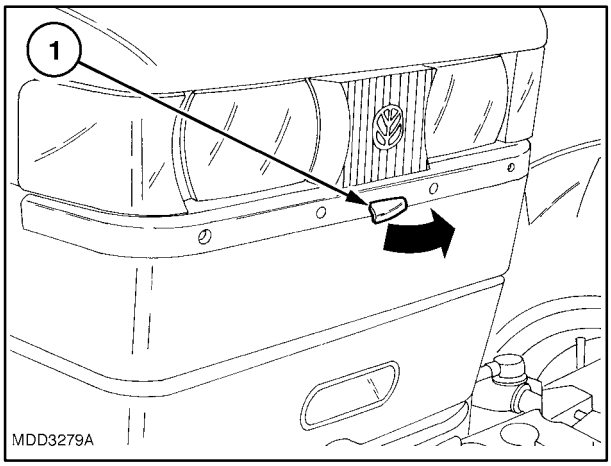

2

BONNET

The bonnet is hinged at the rear to allow easy and safe access to the various engine components.

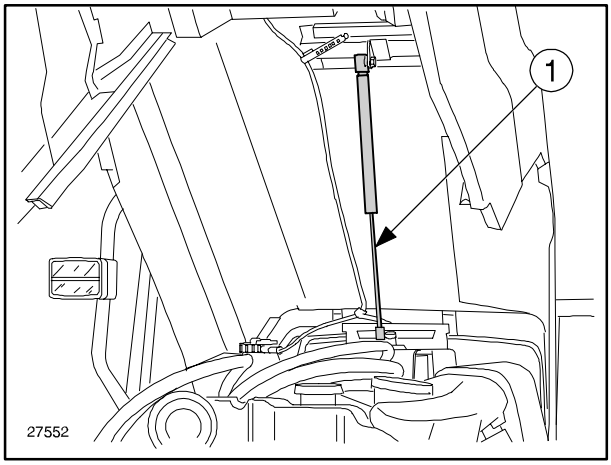

3

BONNET OPENING

Press the button (**1**) fig. 2 to open the bonnet.
Lift the bonnet from the front and allow the bonnet to open.
The gas spring (**1**) fig. 3, will hold the bonnet in the open position.

NOTE: *To close the bonnet, pull the bonnet downwards, making sure that it hooks into the closed position.*

LUBRICATION AND MAINTENANCE TABLE

The numbers in the second column refer to the operations in the following pages of this section.

Hours of work	Operation Number	Maintenance operations	Functional check	Fill−up	Cleaning	Lubrication	Adjustment	Renewal	Page
Flexible mainten-ance	1	Adjust engine clutch					●		3−7
	2	Windscreen washer tank		●					3−7
	3	Adjust fan belt					●		3−8
	4	Adjust compressor belt					●		3−8
	5	Outlet valve dry air filter			●				3−8
With warn-ing light on	6	Main cartridge dry air filter			●				3−9
	7	Brake fluid reservoir	●	●					3−10
Every 10 hours	8	Oil sump	●	●					3−11
	9	Radiator expansion tank (model TN65D/S − TN75D/S)	●	●					3−11
	10	Cab air filters			●				3−12
	11	Air conditioning dehydration filter			●				3−12
	12	Condenser			●				3−13
Every 50 hours	13	Rear wheel hubs				●			3−14
	14	Lift and implement linkage				●			3−14
	15	4WD steering cylinders				●			3−14
	16	4WD front axle pivot				●			3−15
	17	Transmission shaft (SUPERSTEER 4WD)				●			3−15
	18	Front axle pivot (Standard 4WD)				●			3−15
	19	2WD steering cylinder				●			3−16
	20	Stub axle: right and left hand sides, 2WD				●			3−16
	21	2WD front axle pivot				●			3−16
	22	Fuel filter (condensation drain)			●				3−17
	23	Tyre pressures	●						3−17
	24	Front lift arms shaft				●			3−18
	25	Front PTO coupling				●			3−18

Hours of work	Operation Number	Maintenance operations	Functional check	Fill−up	Cleaning	Lubrication	Adjustment	Renewal	Page
Every 300 hours	26	Oil change, engine sump						●	3−19
	27	Battery	●	●					3−19
	28	Fuel filter						●	3−19
	29	Fuel pump filter			●				3−20
	30	Transmission oil filter and services						●	3−20
	31	HI−LO/POWER−SHUTTLE oil filter						●	3−20
	32	Engine oil filter						●	3−21
	33	Air filter (external cartridge)			●				3−21
	34	Transmission and lift	●	●					3−21
	35	4WD front axle housing	●	●					3−22
	36	Transmission handbrake	●				●		3−22
	37	4WD front axle final drives	●	●					3−22
	38	2WD front wheels				●			3−23
	39	4WD front axle joints				●			3−23
Every 900 hours	40	Engine valves	●				●		3−23
Every 1200 hours or every year	41	Cab air filters						●	3−24
	42	Air filter (internal and external cartridges)						●	3−24
	43	Fuel tank			●				3−24
Every 1200 hours or every 2 years	44	4WD front axle housing oil (Standard)						●	3−25
	45	4WD front axle housing oil (Supersteer)						●	3−25
	46	4WD front axle lateral hubs oil						●	3−25
	47	Injectors	●				●		3−26
	48	Engine cooling system						●	3−27
	49	Transmission and lift oil						●	3−29
General mainten-ance	Bleed fuel system								3−30
	Bleed brake system 2WD models								3−31
	Bleed brake system 4WD models with front brakes								3−32
	Electrical system								3−34
	Notes on bodywork maintenance								3−43
	Tractor storage								3−44

FLEXIBLE MAINTENANCE

OPERATION 1 − ENGINE/GEAR CLUTCH ADJUSTMENT (WITH MECHANICAL TRANSMISSIONS) − Fig. 4

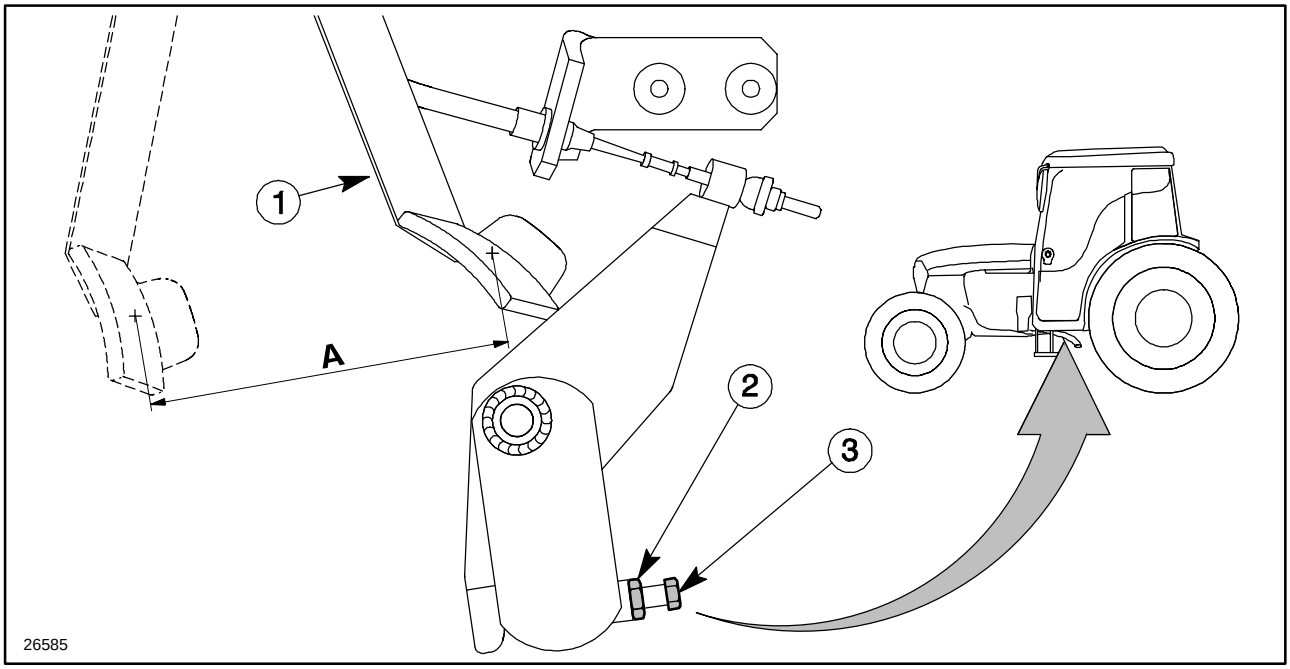

4

If pedal travel becomes uncomfortable, or to prevent the clutch from slipping, check that travel **A** on transmission clutch pedal (**1**) is **A** = 5.90 ± 0.08 inch. (150 ± 2 mm) (for all models), if not, adjust as follows:

- release locknut (**2**) and turn nut (**3**) counter−clockwise;
- check that distance **A** corresponds with the relative measurement;
- tighten the locknut (**2**);
- re−check that pedal travel is as specified.

OPERATION 2

WINDSCREEN WASHER TANK − Fig. 5

To fill−up the windscreen washer tank, remove filler cap (**1**) and fill up the tank (**2**) with washing liquid.

WARNING: *In winter use water with an anti−freeze product.*

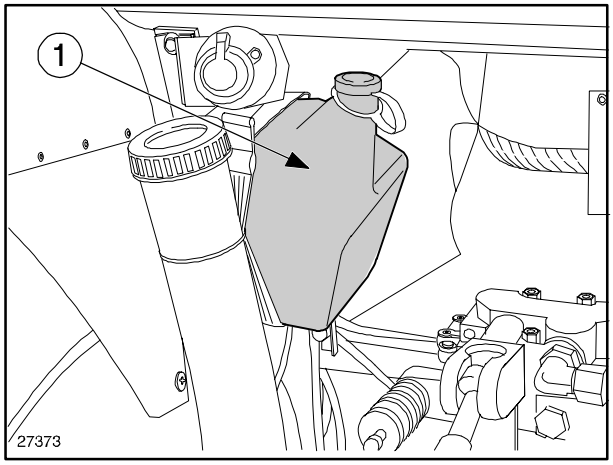

5

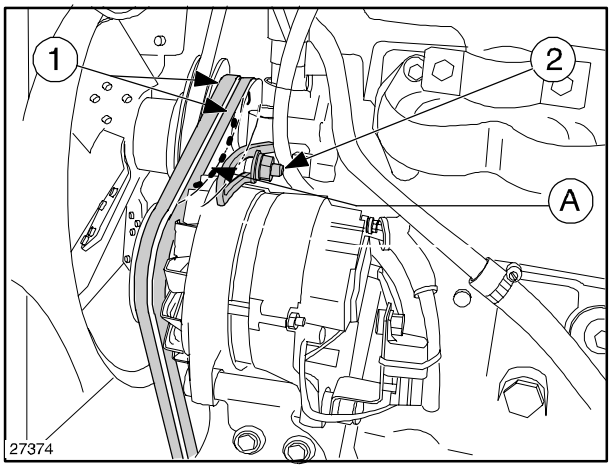

6

OPERATION 3

FAN BELT (VERSION WITHOUT CAB AND CAB WITHOUT AIR CONDITIONING) − Fig. 6

Check that the tension (**A**) of the belt (**1**) is 0.39 ÷ 0.43 inch. (10 ÷ 11 mm) with a load of 78 ÷ 98 N (8 ÷ 10 kg).

To adjust, loosen the screw (**2**) and adjust the tension to the values shown above.

NOTE: *If the belt is cracked or requires frequent adjustment, replace.*

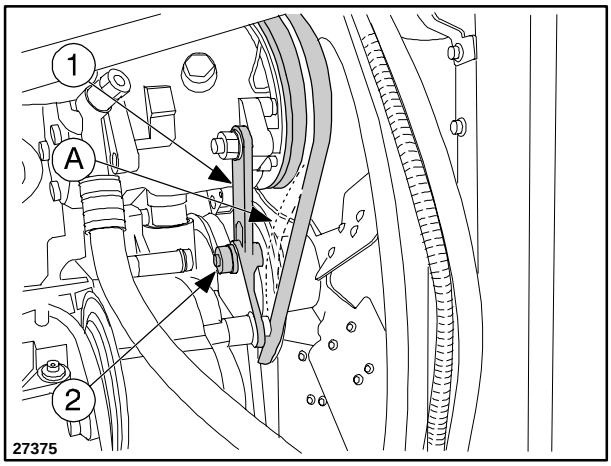

7

OPERATION 4

COMPRESSOR BELT − Fig. 7

Check that the tension (**A**) of the belt is 0.47 ÷ 0.51 inch. (12 ÷ 13 mm) with a load of 78 ÷ 98 N (8 ÷ 10 kg), measured as shown in the drawing.
To adjust, loosen the screw (**1**) and adjust the belt tensioner (**2**).

NOTE: *If the belt is cracked or requires frequent adjustment, replace.*

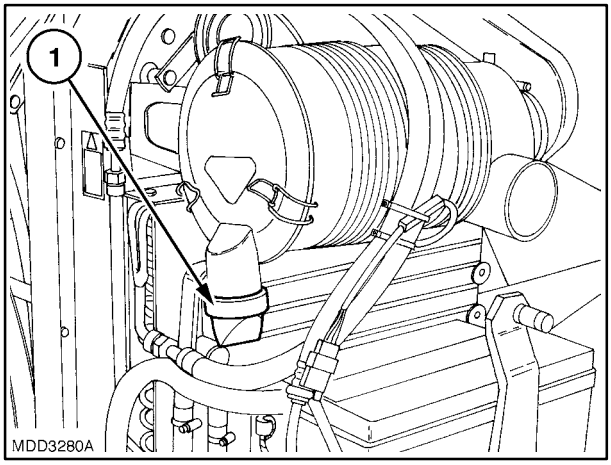

8

OPERATION 5

AIR FILTER OUTLET VALVE − Fig. 8

Check if the outlet valve (**1**) is clogged by pressing the rubber end cap.

WHEN THE INDICATOR LIGHT ILLUMINATES ON THE DASHBOARD

AIR FILTER MAINTENANCE

NOTE: *When the yellow indicator light (**1**) fig. 9 illuminates, check for filter clogging.*
Replace the external cartridge every year or when cracks appear (visible by placing a light inside). Do not wash or blow into the inside of the safety cartridge, replace together with the external cartridge.

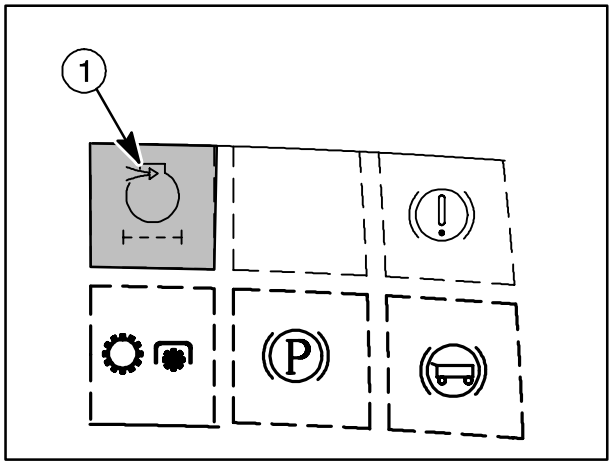

9

OPERATION 6

AIR FILTER EXTERNAL CARTRIDGE

When the red indicator illuminates on the control panel, remove the cover, extract the external cartridge (**1**) and clean as follows;

- with a jet of compressed air at a pressure of less than 85.57 psi (5.9 bar) from the inside towards the outside;

or:

- with water and a non−foaming detergent, rinse with a water jet at a pressure of less than 42.06 psi (2.9 bar) − and dry with dry air at a temperature of less than 122 °F (50 °C).

Never clean the cartridge by tapping on a hard surface. It is advised to tap the cartridge ends on the palm of the hand.

Clean the inside parts of the container carefully with a damp cloth.

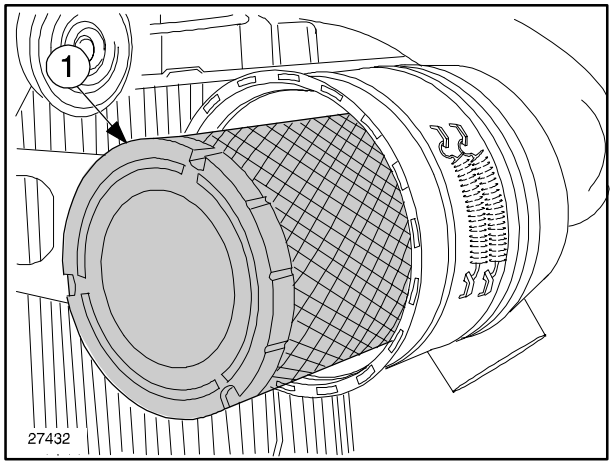

10

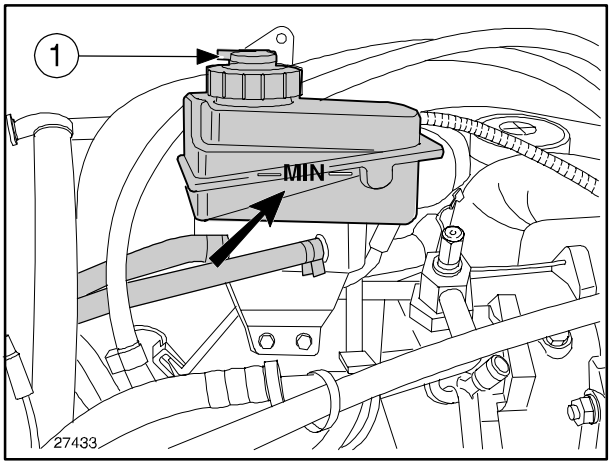

11

OPERATION 7

BRAKE FLUID LEVEL − Fig. 11

Check that the fluid level never drops below the point marked (**MIN**) by the arrow on the reservoir.

WARNING**:** *Illumination of the red warning light on the control panel, indicates that the oil level in the reservoir is below the "**MIN**". Eliminate the cause of the problem and fill−up with oil. At the end of the operation, bleed the circuit as described on page 3−31 and 3−32.*
If the light remains illuminated, contact your New Holland dealer.

NOTE: *Periodically check the indicator efficiency.*
*By pressing the blue push button (**1**) on the cover, if all is working correctly, the indicator lamp number 9, page 2−8 should illuminate.*

EVERY 10 HOURS OF WORK

OPERATION 8

ENGINE OIL LEVEL − Fig. 12

Check the level with the engine switched off on a flat surface. Allow at least five minutes for the oil to settle in the reservoir:

− remove the dipstick (**1**), clean with a cloth and replace in the dipstick hole (**2**);

− remove the dipstick again and check that the oil level is between the "**MIN** and **MAX**" marks;

− if necessary, top up with oil through the fill point (**2**) to the required level.

NOTE: *A red warning light on the control panel shows when the oil level is low.*

CAUTION: *Never run the engine when the oil level is below the "**MIN**" mark.*

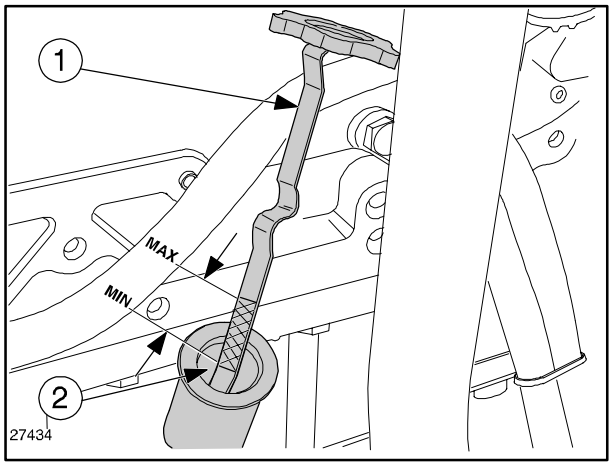

12

OPERATION 9

RADIATOR EXPANSION TANK − Fig. 13 (ONLY MODELS TN70D/S, TN75D/S)

The level must always be above the **"MIN"** mark shown in the figure.
If necessary, to up through the filler cap (**1**).

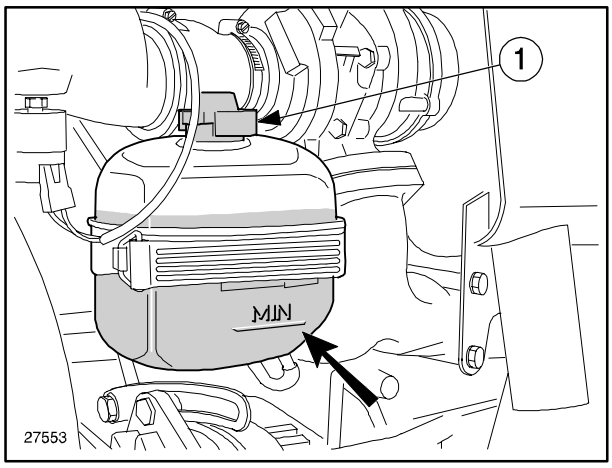

13

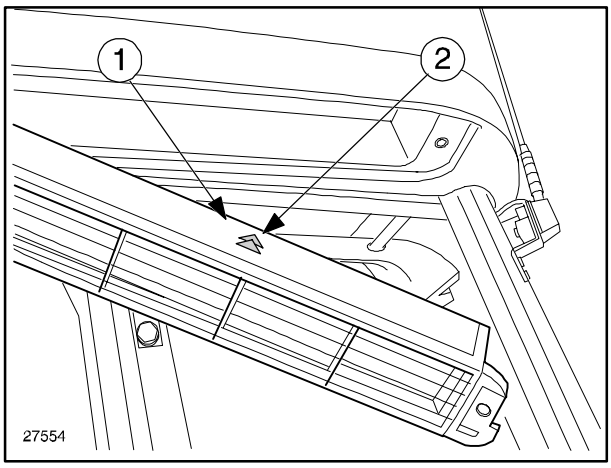

14

OPERATION 10

CAB AIR FILTERS − Fig. 14

Unscrew the cover retaining knobs, extract the cartridges (**1**) and clean:

− by tapping gently on a flat surface, with the outward−facing part downwards;

or:

− with a jet of compressed air at a pressure of less than 100.08 psi (6.9 bar);

or:

− by immersing the filters in a solution of water and non−foaming agent for 15 minutes;

or:

− rinsing with a jet of water at a pressure of less than 39.16 psi (2.7 bar) and drying with dry, non−compressed air.

Clean the filter seats with a cloth. When re−fitting the cartridges, the arrow on the label must face upwards, as indicated by the arrow (**2**) in the figure.

NOTE: If active carbon filters are used when working with pesticides, carefully read the instructions on page 2−170 section 2.

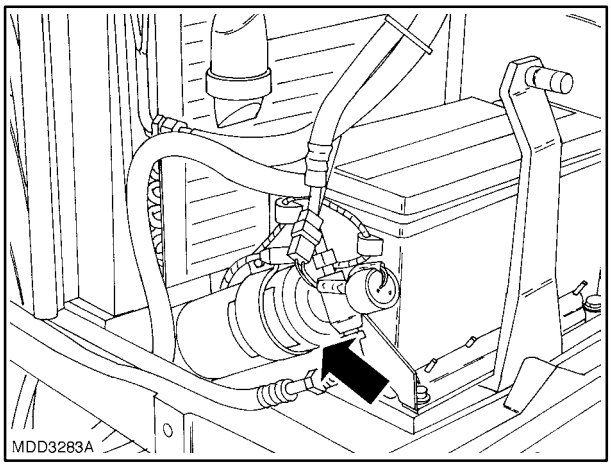

15

OPERATION 11

DEHYDRATION FILTER FOR CAB AIR CONDITIONING SYSTEM − Figs. 15 and 16

At the start of the period of use, check the efficient operation of the filter as follows:
Start the engine and switch on the conditioner, as described on page 2−171 Section 2.

To check that cold air comes out of the vents. If not, contact specialised personnel at your local NEW HOLLAND dealer.

NOTE: *The filter must always be replaced when work is carried out on the air conditioning system. Take this opportunity to check the oil level in the compressor.*

OPERATION 12

CONDENSER − Fig. 16

Remove any dirt that accumulates between the cooling fins. Check that the fins are not deformed then restore proper working conditions. In order to access the condenser if a heat exchanger is fitted (Power Shuttle version), turn the retainer (**1**) and extract.

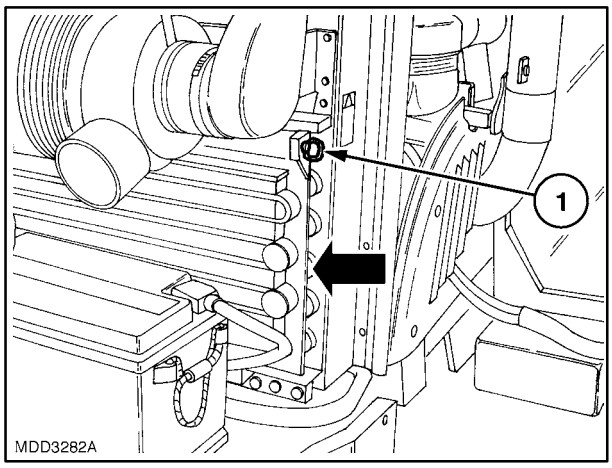

16

EVERY 50 HOURS OF WORK

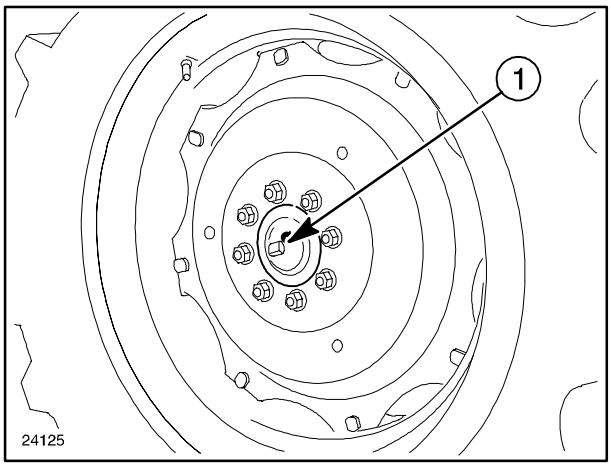

17

OPERATION 13

REAR WHEEL HUBS − Fig. 17

Check regularly that when AMBRA GR9 grease is pumped through the grease nipple (**1**) (one on each side), grease escapes from the internal guard. To fill the grease chamber between the wheel hub and the reducer housing in a uniform manner, rotate the wheel. When working in particularly dusty or wet conditions, this operation must be carried out frequently to expel any dust or water which has entered.

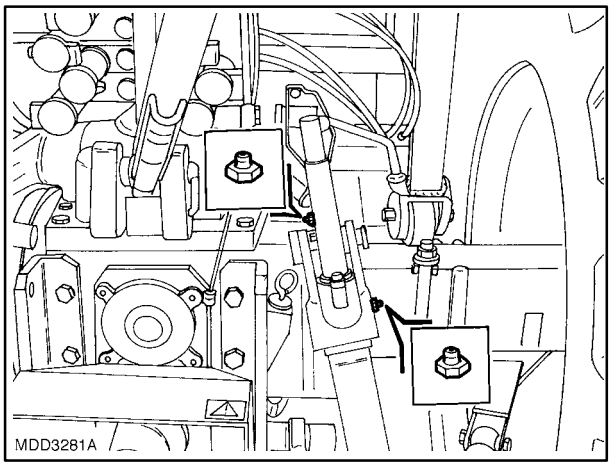

18

OPERATION 14

LIFT LINKAGE − Fig. 18

Using a grease gun, pump AMBRA GR9 grease into the nipples shown.

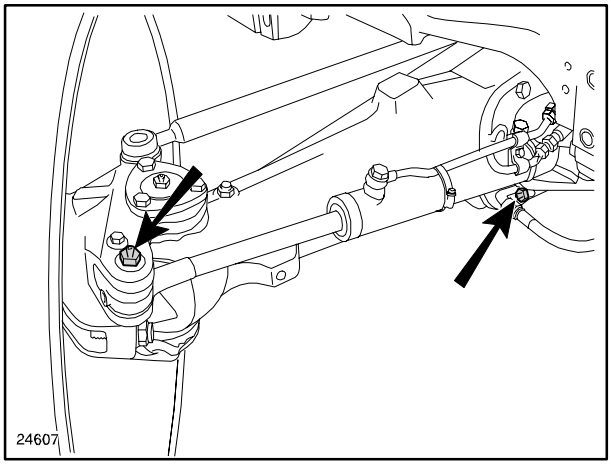

19

OPERATION 15

4WD STEERING CYLINDERS − Fig. 19

Using a grease gun, pump AMBRA GR9 grease into the nipples shown (two on each side for standard front axle models, or four on each side for supersteer front axle models).

OPERATION 16

4WD SUPERSTEER FRONT AXLE PIVOT − Fig. 20

Using a grease gun (**1**) pump AMBRA GR9 grease into the nipple shown.

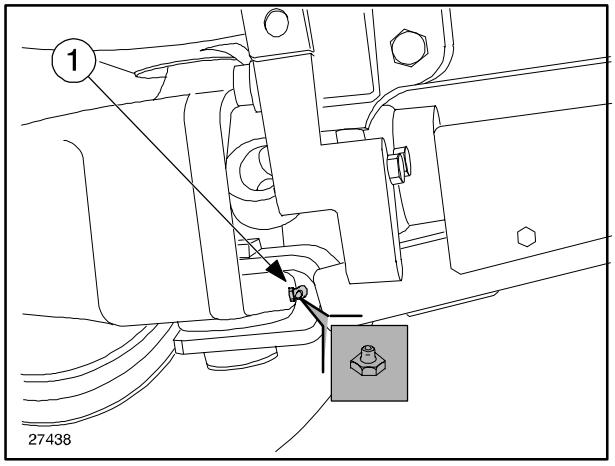

20

OPERATION 17

TRANSMISSION SHAFT WITH 4WD SUPERSTEER FRONT AXLE − Fig. 21

Using a grease gun, pump AMBRA GR9 grease into the nipples shown.

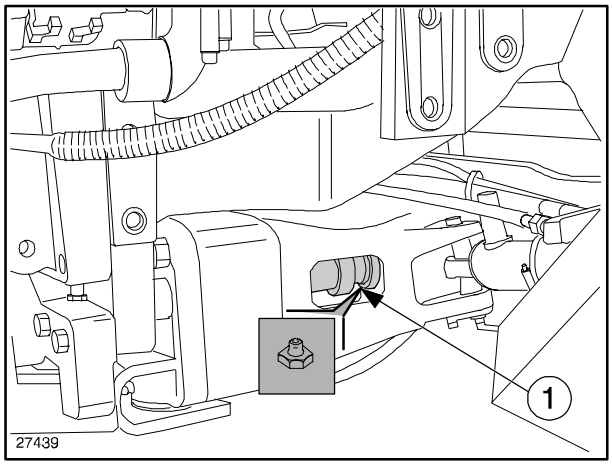

21

OPERATION 18

4WD FRONT AXLE PIVOT (STANDARD) − Fig. 22

Using a grease gun, pump AMBRA GR9 grease into the nipples shown.

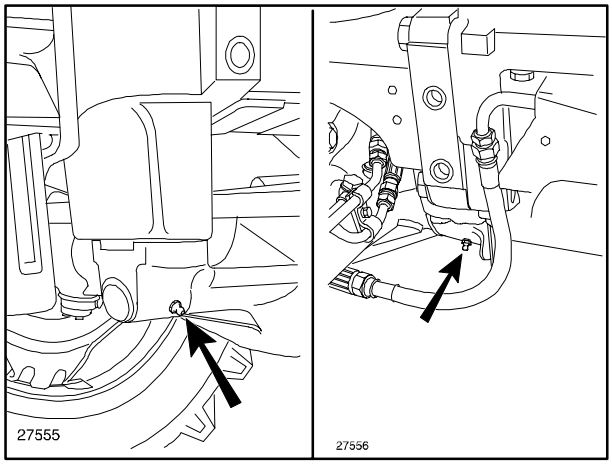

22

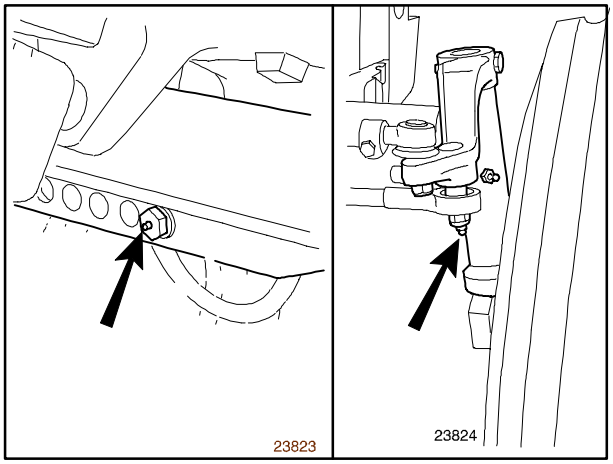

23

OPERATION 19

2WD STEERING CYLINDERS − Fig. 23

Using a grease gun, pump AMBRA GR9 grease into the nipple shown.

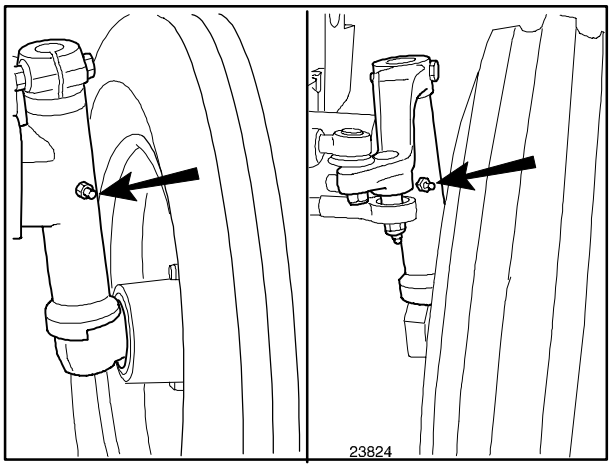

24

OPERATION 20

2WD RIGHT AND LEFT−HAND SIDE STUB AXLE − Fig. 24

Using a grease gun, pump AMBRA GR9 grease into the nipple shown.

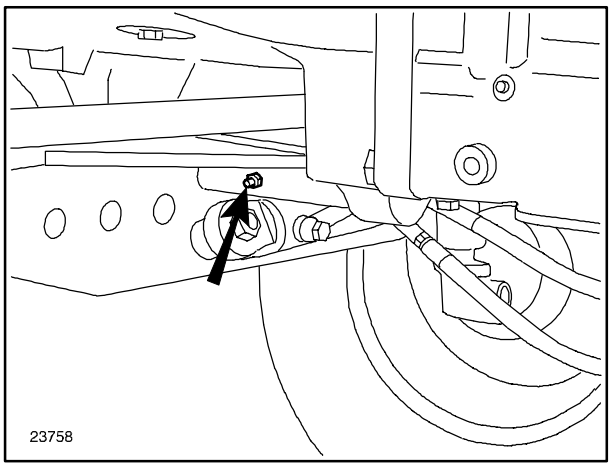

25

OPERATION 21

2WD FRONT AXLE PIVOT − Fig. 25

Using a grease gun, pump AMBRA GR9 grease into the nipple shown.

OPERATION 22

FUEL FILTER − Fig. 26

Discharge condensation by loosening the screw (**1**) by 3/4 turns.

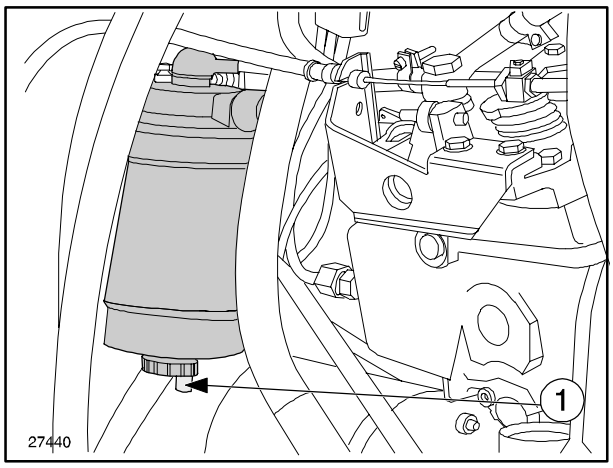

26

OPERATION 23

TYRE PRESSURES − Fig. 27

Connect a pressure gauge to the pressure reading valve and check that the pressure is as specified.

Consult the tables on pages 133 and 134, Section 2.

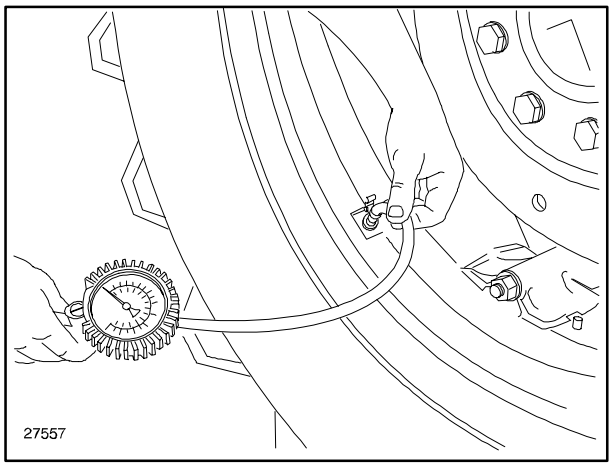

27

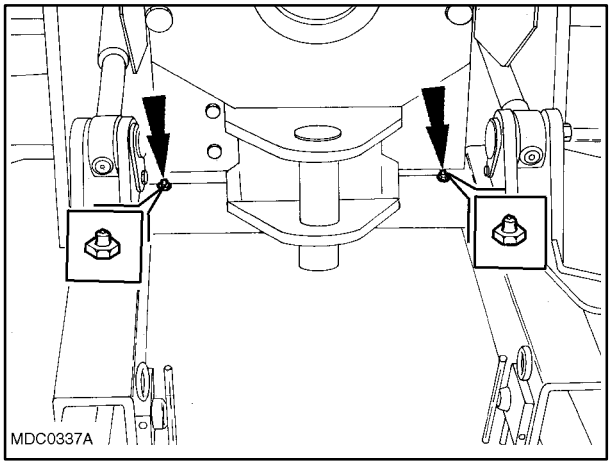

28

OPERATION 24

FRONT LIFT ARMS SHAFT − Fig. 28

Using a grease gun, pump AMBRA GR9 grease into the nipple shown.

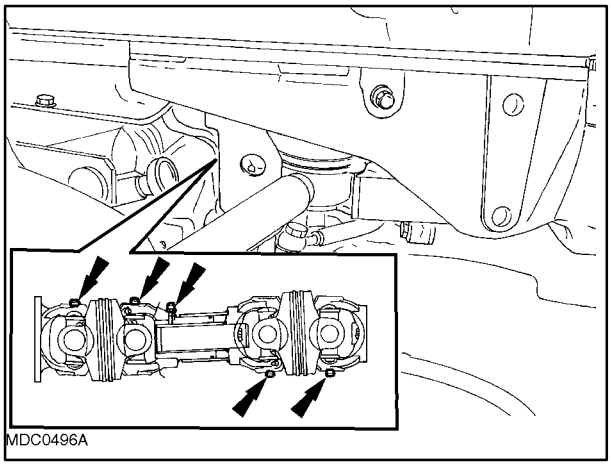

29

OPERATION 25

FRONT PTO COUPLING − Fig. 29

Using a grease gun, pump AMBRA GR9 grease into the five nipples shown, housed inside the radiator.

EVERY 300 HOURS OF WORK

OPERATION 26

OIL SUMP − Fig. 30

Drain through the plug shown in the figure, and the fill up through the fill point (**1**).

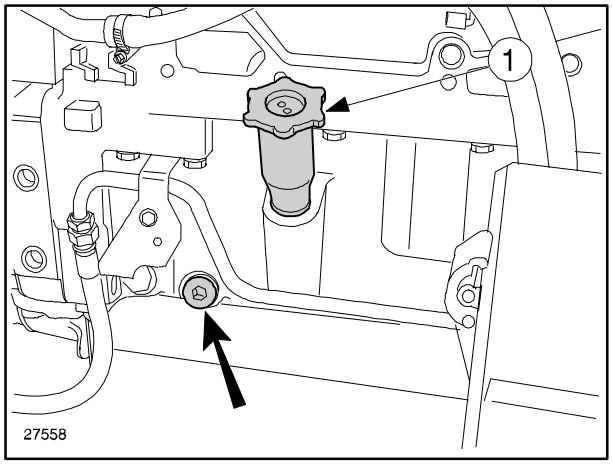

30

OPERATION 27

BATTERY − Fig. 31

NOTE: *The electrolyte level must be checked with the engine switched off, the tractor on a flat surface and the battery cold.*

NOTE: *Check that the clamps are securely attached to the terminals.*
If the battery requires topping up frequently or tends to run down, have the tractor electrical system checked by skilled personnel at your local dealer.

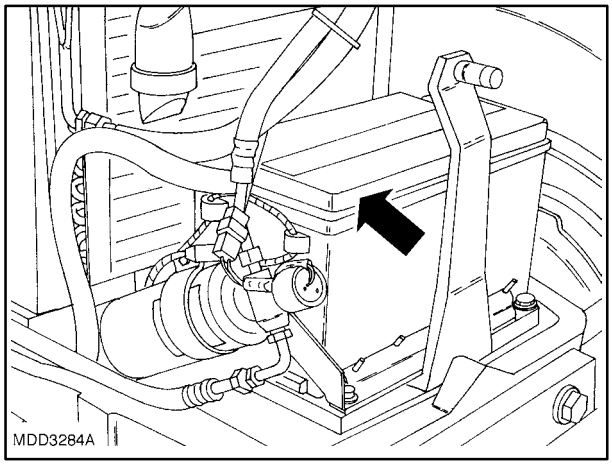

31

OPERATION 28

FUEL FILTER − Fig. 32

Unscrew the filter cartridge (**1**) by hand and replace. Bleed off the air, as described on page 3−30.

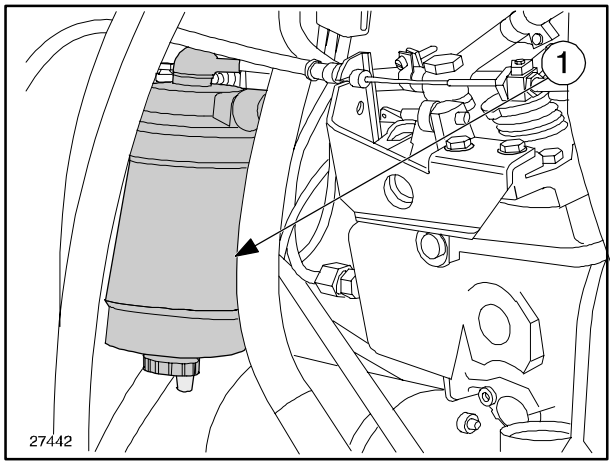

32

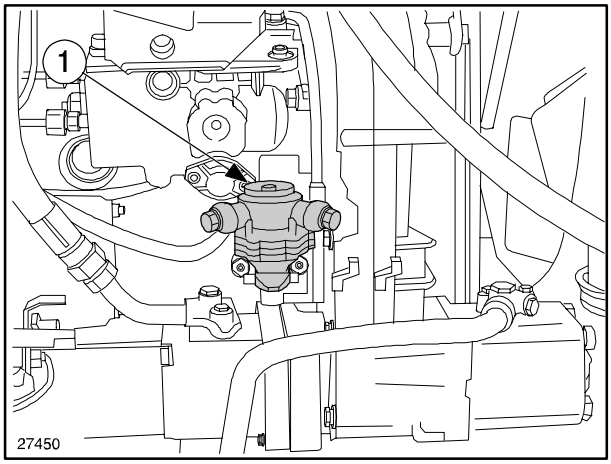

33

OPERATION 29

FUEL PUMP FILTER − Fig. 33

Remove the cover (**1**) and clean the internal filter.

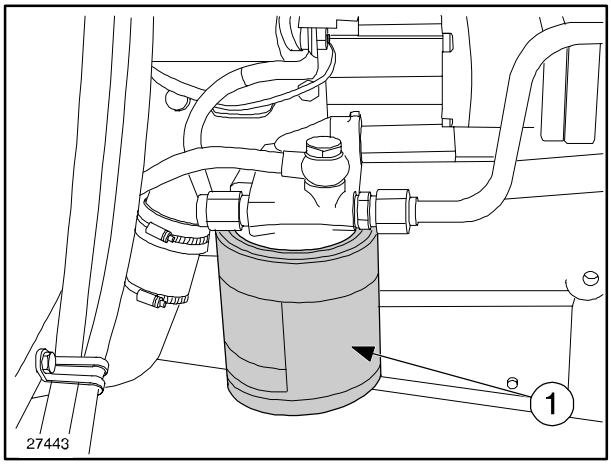

34

OPERATION 30

TRANSMISSION AND SERVICES OIL FILTER − Fig. 34

Unscrew the container (**1**) and replace the internal filter. Before re−positioning the container, oil the seals and screw on by hand for $^{3}/_{4}$ of a turn. Top up with new oil (see operation no. 34).

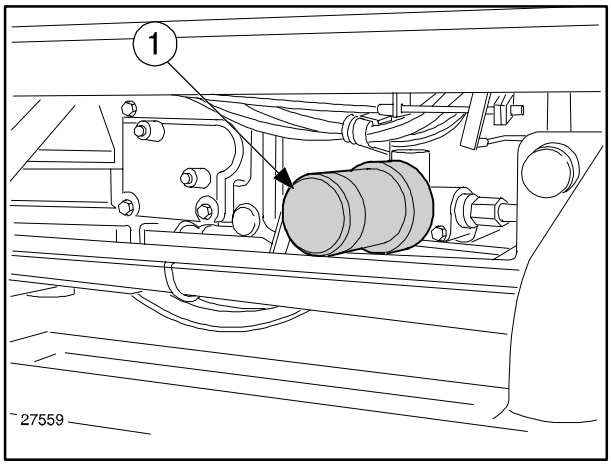

35

OPERATION 31

HI−LO/ POWER SHUTTLE OIL FILTER − Fig. 35

Replace the filter inside the container (**1**) under the cab, on the right−hand side. Oil the seal, screw on and tighten the cartridge by $^{3}/_{4}$ of a turn by hand. Top up with new oil (see operation no. 34).

OPERATION 32

ENGINE OIL FILTER − Fig. 36

Replace the filter (**1**): and oil the seal, screw on and tighten the cartridge by $^3/_4$ of a turn by hand. Top up with new oil (see operation no. 8).

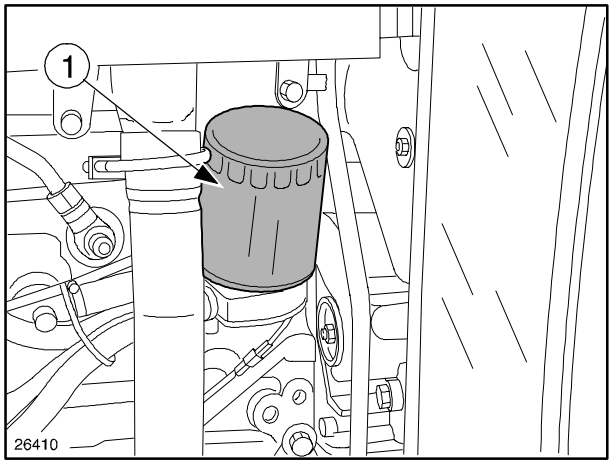

36

OPERATION 33

AIR FILTER (EXTERNAL CARTRIDGE) − Fig. 37

Remove the cover (**2**), extract the external cartridge (**1**) and clean (see operation no. 6).

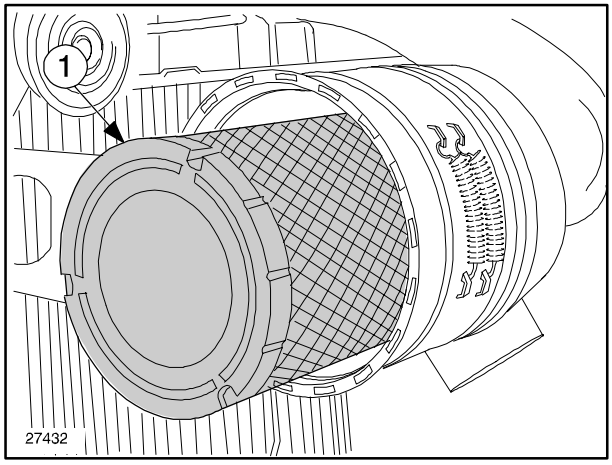

37

OPERATION 34

TRANSMISSION AND LIFT − Fig. 38

With the tractor on a level surface, the engine switched off and the lift arms lowered, check that the oil level reaches the upper mark on the dipstick (**1**). If necessary, top up with oil through the dipstick hole.

NOTE: *If the tractor is fitted with a front lift, make sure that the lift arms are lowered before checking the transmission oil.*

NOTE: *For oil qualities, see the table on page 3−45.*

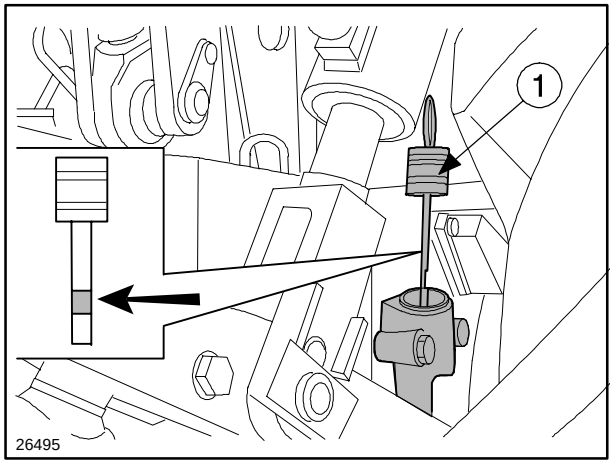

38

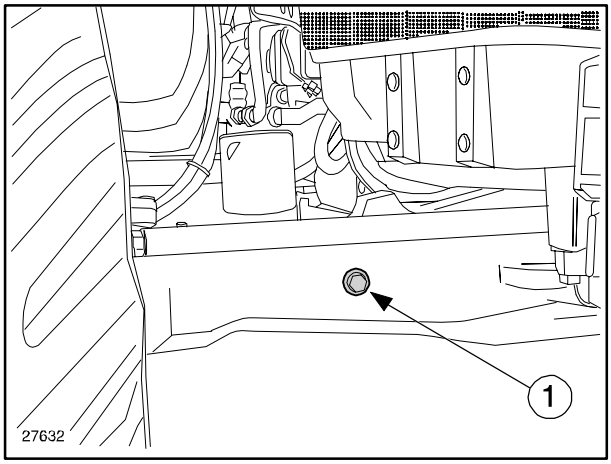

39

OPERATION 35

4WD FRONT AXLE HOUSING − Fig. 39

Check the oil level as follows:

- park the tractor on a flat surface;
- remove the plug (**1**), the oil will flow out of the plug hole.

If necessary, to up through the plug hole (**1**) until oil comes out.

NOTE: *For oil qualities, see the table on page 3−45.*

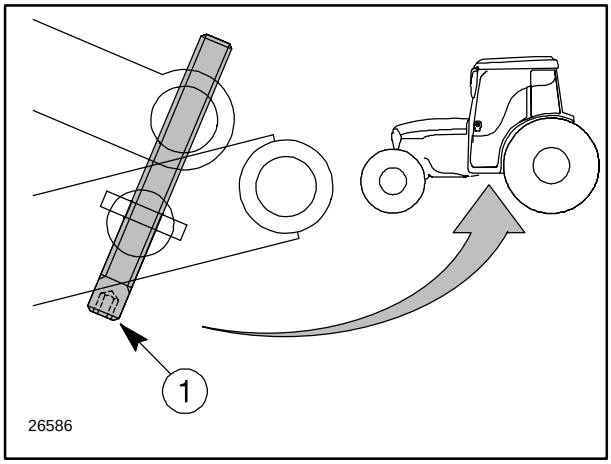

40

OPERATION 36

TRANSMISSION HAND BRAKE − Fig. 40

When pulled three notches, the handbrake should engage. If not, tighten the adjustment screw (**1**) if it exceeds the three notches or loosen the screw if it fails to reach the third notch.

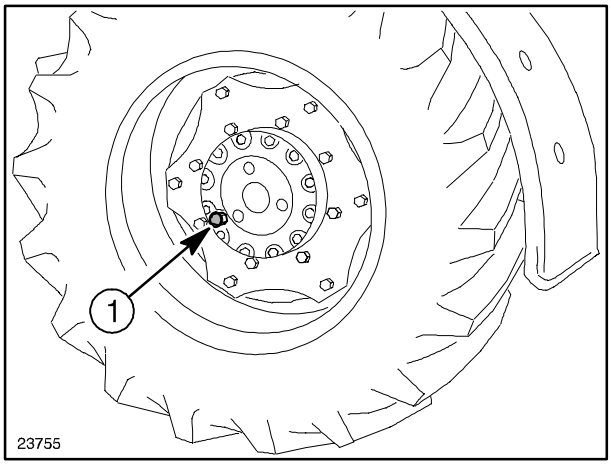

41

OPERATION 37

4WD FRONT AXLE FINAL DRIVES − Fig. 41

Bring the plug (**1**) to a horizontal position and check the oil level. If oil does not come out of the plug, top up through the plug hole.

NOTE: *For oil qualities, see the table on page 3−45.*

OPERATION 38

2WD FRONT WHEELS − Fig. 42

Remove the hub covers (**1**) and fill with AMBRA GR9 grease, then replace the covers.

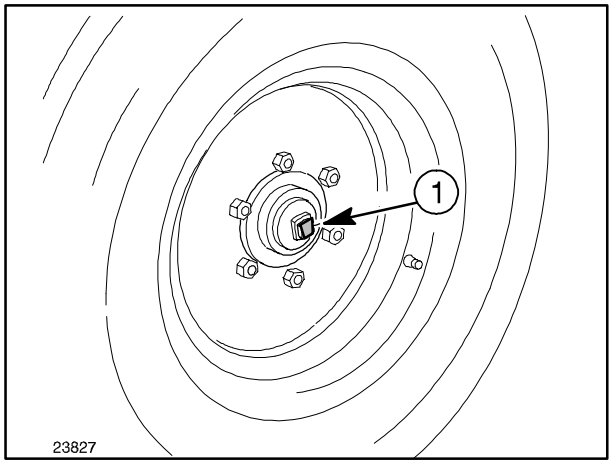

42

OPERATION 39

4WD FRONT STUB AXLES − Fig. 43

Inject AMBRA GR9 grease in the two nipples shown (two on each side).

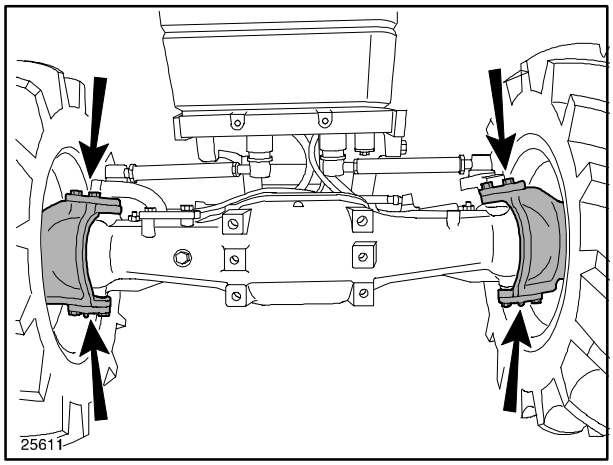

43

EVERY 900 HOURS OF WORK

OPERATION 40

ENGINE VALVES − Fig. 44

Contact authorised personnel at your local dealer to check the clearance between the valves and the rocker arms 0.01 ± 0.002 inch. (0.30 ± 0.05 mm) for inlet and exhaust valves). The inspection must be carried out when the engine is cold.

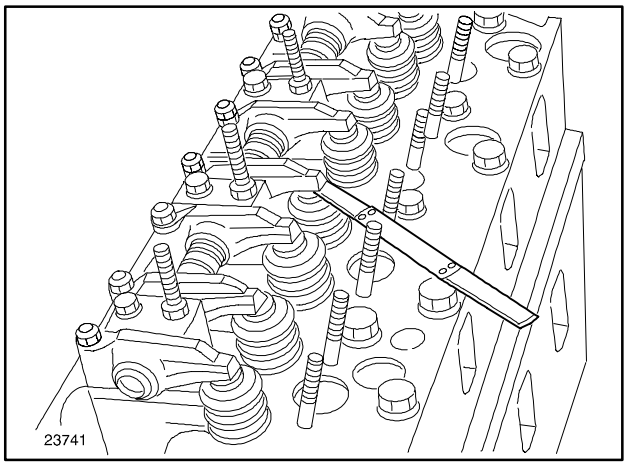

44

EVERY 1200 HOURS OF WORK OR EVERY YEAR

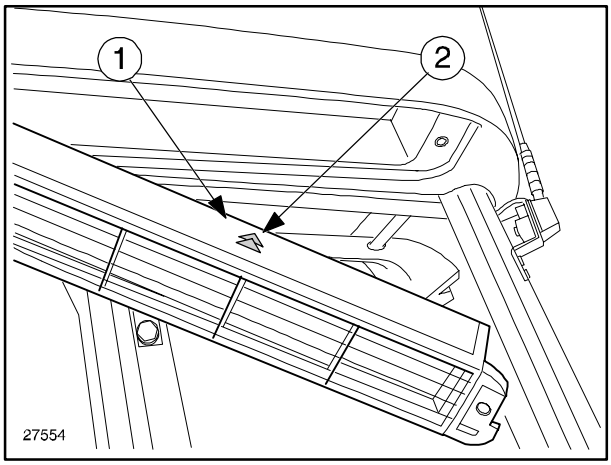

45

OPERATION 41

CAB AIR FILTERS − Fig. 45

Remove the grilles shown, one on each side, and replace the internal filter cartridges.

NOTE: *The two arrows (**2**) printed on the cartridge must point upwards.*

NOTE: If active carbon filters are used when working with pesticides, carefully read the instructions on page 2−170 section 2.

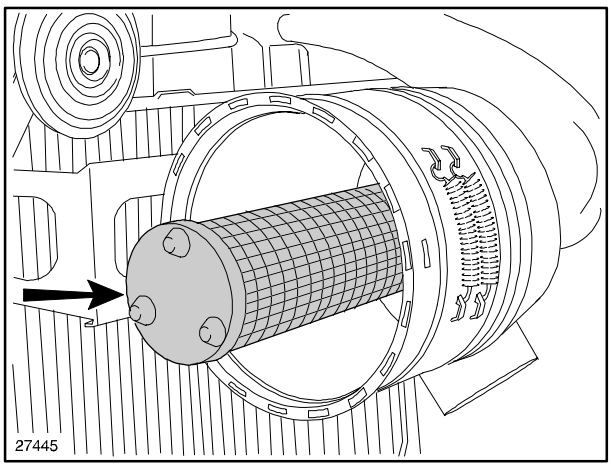

46

OPERATION 42

AIR FILTER − Fig. 46

Replace the external filter (**1**) fig. 37, together with the internal filter.

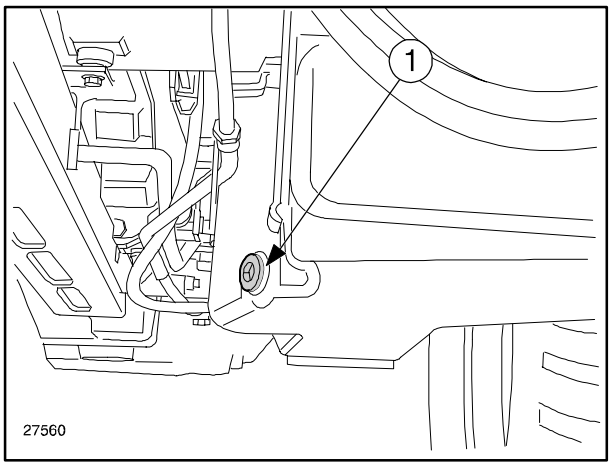

47

OPERATION 43

FUEL TANK − Fig. 47

With the tractor on a level surface and the engine switched off, drain off the fuel as described below:

- place a container under the tank;
- remove the plug (**1**) and drain the fuel to eliminate any impurities in the tank.

Refill the tank with clean fuel and bleed the system, as described on page 3−30.

EVERY 1200 HOURS OR EVERY 2 YEARS

OPERATION 44

4WD FRONT AXLE HOUSING (STANDARD) − Fig. 48

Place a container under the axle housing, unscrew the screw (**2**), let all of the oil drain out. Fill up with new oil through the plug (**1**).

NOTE: *For oil qualities, see the table on page 3−45.*

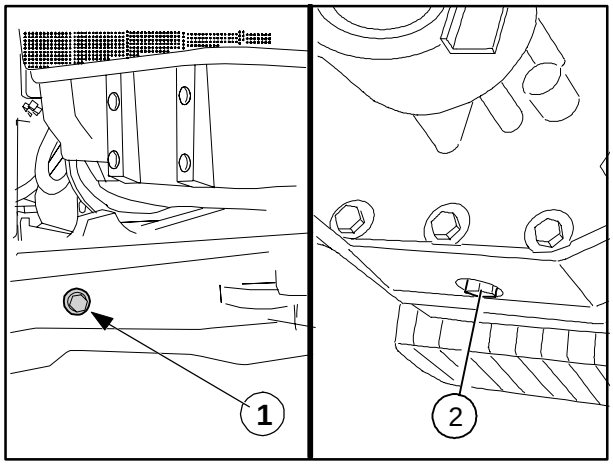

48

OPERATION 45

4WD FRONT AXLE HOUSING (SUPERSTEER) − Fig. 49

Place a container under the axle housing, unscrew the screw (**2**), let all of the oil drain out. Fill up with new oil through the plug (**1**).

NOTE: *For oil qualities, see the table on page 3−45.*

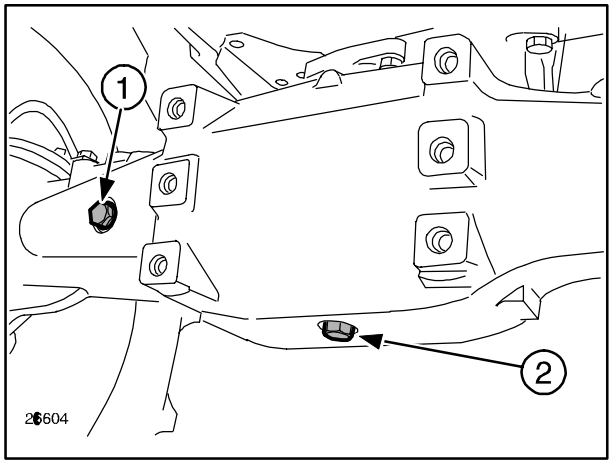

49

OPERATION 46

4WD FRONT AXLE FINAL DRIVES OIL DRAINAGE − Fig. 50

Position the plug (**1**) at the lowest point, place a container under the plug hole and drain off the oil.
Fill up with new oil through the hole (**1**) and check the level (see operation 37).

NOTE: *For oil qualities, see the table on page 3−45.*

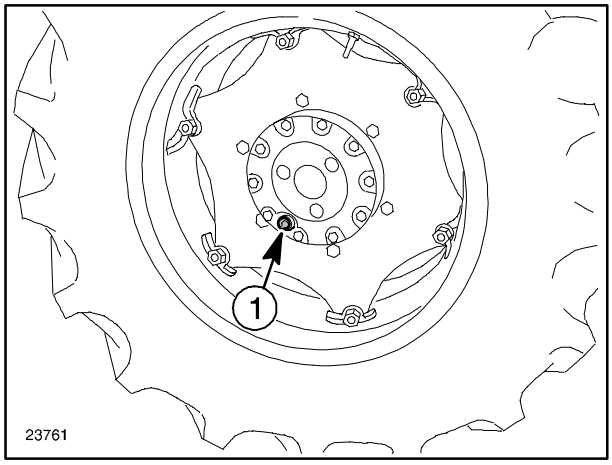

50

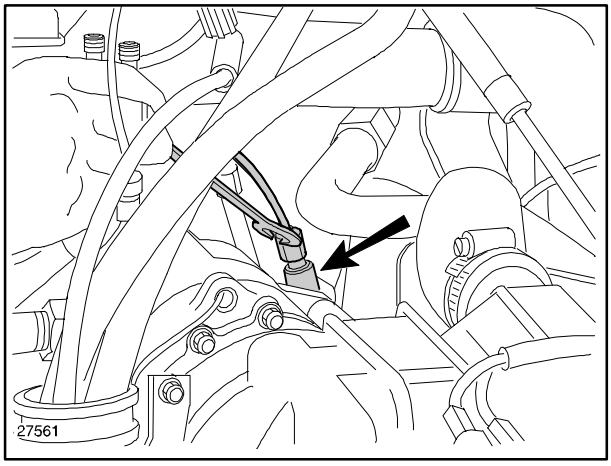

51

OPERATION 47

INJECTORS − Fig. 51

Have the local New Holland dealer check the pressure settings of the injectors (see page 5−9). To remove from the engine, detach the lines and remove the connectors.

NOTE: *Before loosening or disconnecting any part of the injection system, thoroughly clean the work area.*

NOTE: *Cover all injector lines and inlets to prevent dirt from entering.*

OPERATION 48

ENGINE COOLING SYSTEM FLUSHING − Figs. 52, 53 and 54

The system uses a mixture of water and ***«AMBRA AGRIFLU»*** liquid. This liquid has anti−oxidant, anti−corrosive anti−foaming and anti−encrusting properties; it also contains anti−freeze for temperatures up to:

Degrees °F (°C)	17.6 (−8)	5 (−15)	−13 (−25)	−22 (−30)
% by volume of « **AMBRA AGRIFLU** »	20	30	40	50

Filling the circuit when you purchase the tractor will guarantee the system against the minimum temperatures above the values shown on the plate attached to the bonnet.

This mixture can be kept unchanged for a period of ***2 years*** provided that during this time the tractor has not been used for more than ***1200 hours of work***, in which case the mixture must be replaced when the system is flushed.

In emergencies, to prevent overheating in the event of leaks, fill the system by pouring water into the radiator fill point (**1**) fig. 52.
After filling, run the engine for a short period to let the two fluids mix thoroughly.

WARNING: *Repair any damage and top up the mixture as soon as possible, referring to the table above.*

FLUSHING THE SYSTEM (MODELS WITHOUT CABS)

Flush at least every **1200 hours** of work or every **2 years** and whenever switching from or to the anti−freeze mixture

Proceed as follows:

— remove the radiator filler cap (**1**) fig. 52, (for models TN70D/S; TN75D/S also remove supplementary radiator filler cap (**1**) fig. 53 and radiator cap (**1**) fig. 54, then drain off the water with the engine hot;

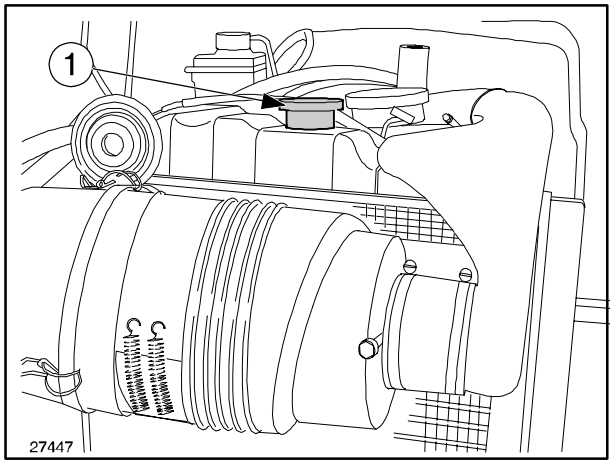

52

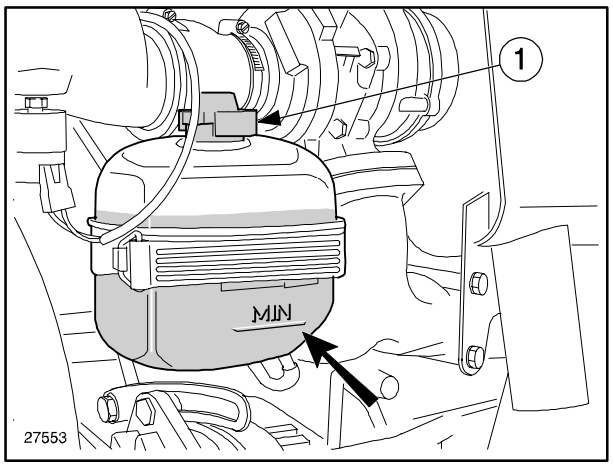

53

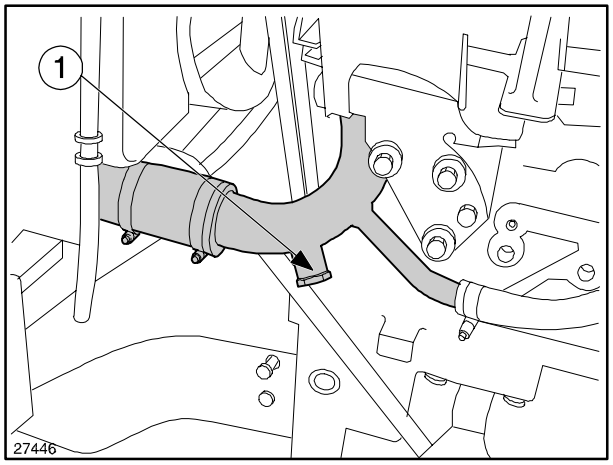

54

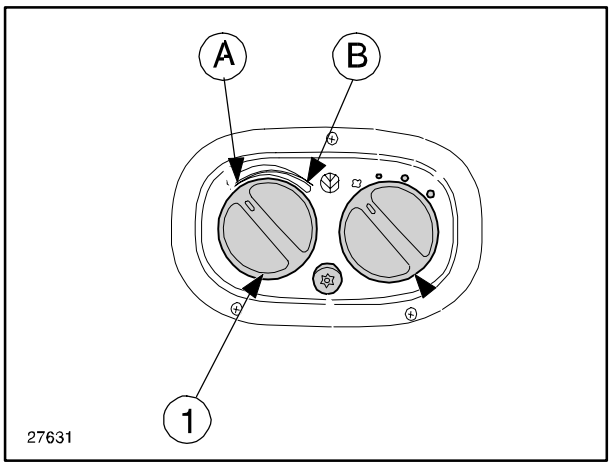

55

— once the engine is cold, fill the radiator with a filtered solution of Solvay soda and water at a ratio of ***0.55 lbs. (250 grams)*** of soda to every ***2.64 gallons (10 litres)*** of water;

— run the tractor for approximately one hour, then drain the flushing solution;

— wait for the engine to cool down slightly, then allow water to circulate by pouring it into the radiator and draining off through the plug (**1**) fig. 54;

— re−fit the plug, fill with water, run the engine for a few minutes and then drain the system;

— leave the engine to cool and then fill up to the normal level.

CAUTION: *The engine must be switched off when draining water from the system.*

THERMOSTAT

A thermostat has been fitted in the cooling system that prevents water from circulating in the radiator (thereby cooling) until the water has reached a suitable temperature, to ensure correct engine operation (approx. 185 °F (85 °C).
If doubts arise concerning thermostat operation, remove the part and have it checked by skilled personnel.

FLUSHING THE SYSTEM (MODELS WITH CABS)

The heating system uses fluid from the engine cooling system, drawn off between the engine and the radiator.

Flush the system as described for models without cabs, bearing in mind that the circuit can be completely drained by turning the temperature adjustment knob (**1**) fig. 55 so that the reference mark is in position **A**.

Fill the engine cooling system and cab heating system as follows:

— fill the radiator with a mixture of water and "***AMBRA AGRIFLU***" liquid and screw on the radiator cap;

— close the heater cock (knob (**1**) on the red sector with the reference mark to position (**A**), start the engine and allow to run at average speed for approximately 5 ÷ 10 minutes (this operation is necessary to preheat the liquid in the engine cooling system);

— remove the upper radiator plug, open the heater cock by turning the knob (**1**) with the reference mark to position (**B**) and allow the engine to run at maximum speed for approximately five minutes;

— with the engine running at high speed, fill up the radiator until completely full, and replace and tighten the cap.

OPERATION 49

TRANSMISSION AND LIFT OIL REPLACEMENT − Figs. 56, 57 and 58

Transmission housing

Place a container under the plug holes (**1**) and (**2**) fig. 56 and drain off the oil.

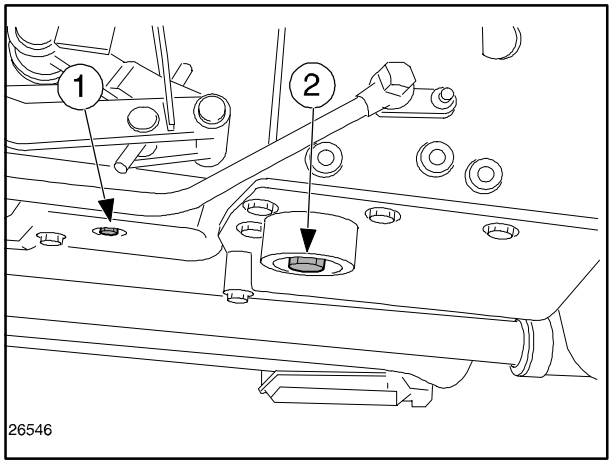

56

Lift torsion bar

Place a container under the bar and drain off the oil through the plug hole (**1**) fig. 57.

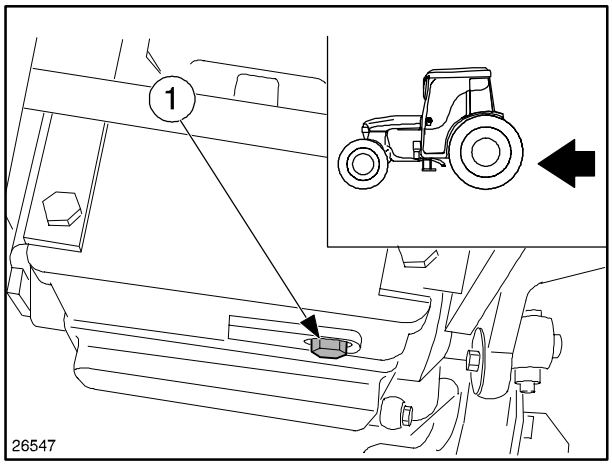

57

4WD drive gear

Place a container under the drive gear housing and drain off the oil through the plug hole (**1**) fig. 58.

After the oil has drained off, screw on the plugs and fill up with new oil through the dipstick hole (**1**) fig. 38 operation no. 34.

NOTE: *Replace the filter every time transmission and lift oil is changed (see operation no. 30).*

NOTE: *For oil qualities, see the table on page 3−45.*

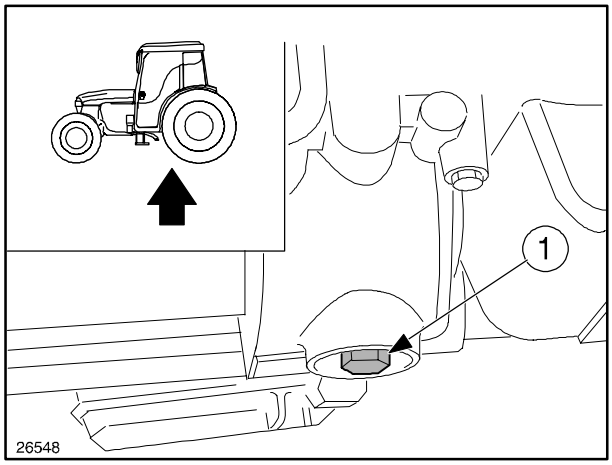

58

GENERAL MAINTENANCE

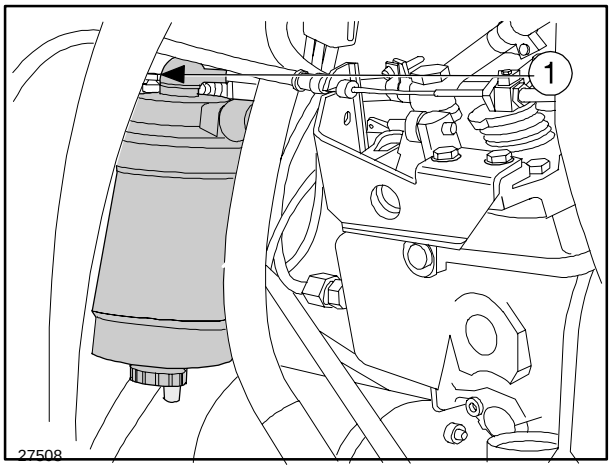

59

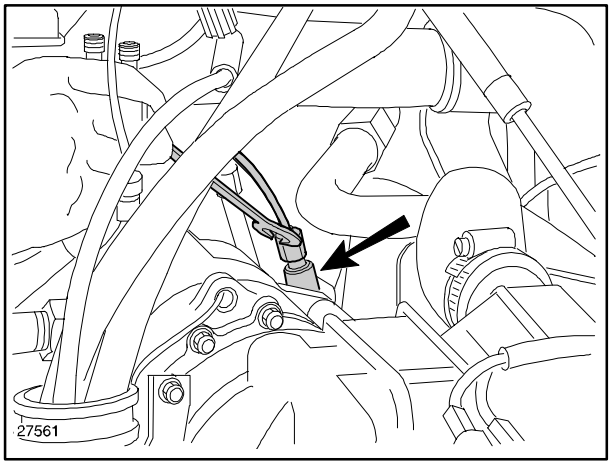

60

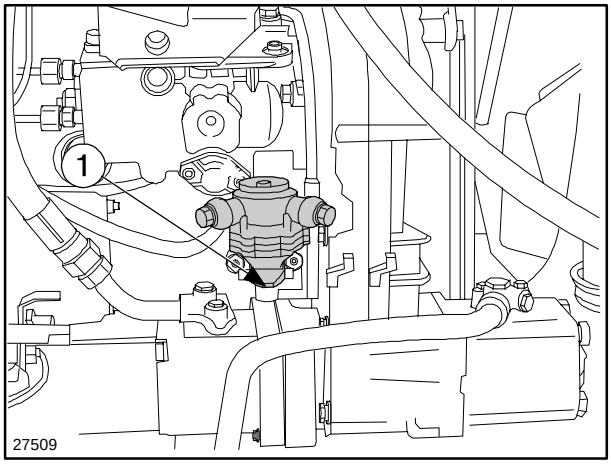

61

BLEEDING THE FUEL SYSTEM

Bleeding procedure − Figs. 59 and 61

During long periods when the tractor is not used, when the filter and fuel lines are removed or when the fuel tank is empty, air may enter the fuel system.

The presence of air makes it difficult to start the engine, which will require bleeding as follows:

1. unscrew the bleed plug (**1**) fig. 59 by two turns;
2. move the lever (**1**) fig. 61 until fuel without air bubbles spurts out of the bleed hole;
3. tighten the plug (**1**) fig. 59;
4. unscrew the three injectors;
5. move the lever again (**1**) fig. 61 until fuel without air bubbles spurts out of the indicators indicated in fig. 51, then tighten the injectors;
6. turn the starter key to position **C** (fig. 1 page 2−4) and, as soon as the engine starts, release the key.

NOTE: *If the engine does not start, repeat operations 1 to 6. If the engine still fails to start, contact your local New Holland dealer.*

NOTE: *The engine is fitted with a rotary injection pump with internal components that must be protected from rusting if not used for over a month. Therefore, before stopping the tractor, mix* ***PROT 10 W/M*** *oil into the fuel in the tank in a proportion of 10% and run the engine for approximately half an hour.*

BLEEDING THE BRAKE FLUID CIRCUIT ON 2WD MODELS

Air must be bled out whenever carrying out work on the brake hydraulic system.
If braking problems are detected, refer to specialised personnel or carry out the circuit bleeding operation, closely observing the following instructions:

— remove the plug, thoroughly clean the external parts of the unit around the bleed screws and the cover of the hydraulic fluid reservoir;

— check that the right (**2**) and the left (**1**) fig. 62 brake reservoirs are full both before and during the bleed operations;

— fully press down the left brake pedal, **slowly**, so that the oil is under pressure;

— keeping the pedal pressed down, loosen the bleed screw (**1**) fig. 63, by half a turn and allow the oil/air bubbles to come out;

— tighten the screw (**1**) fig. 63 and repeat the aforementioned operations until only oil (without air bubbles) comes out;

— press the brake pedal again to put the circuit under pressure, i.e.: when the pedal travel returns to normal;

— repeat the aforementioned operations for the right−hand part of the braking circuit;

— on completion of this procedure, fill up the reservoir with oil.

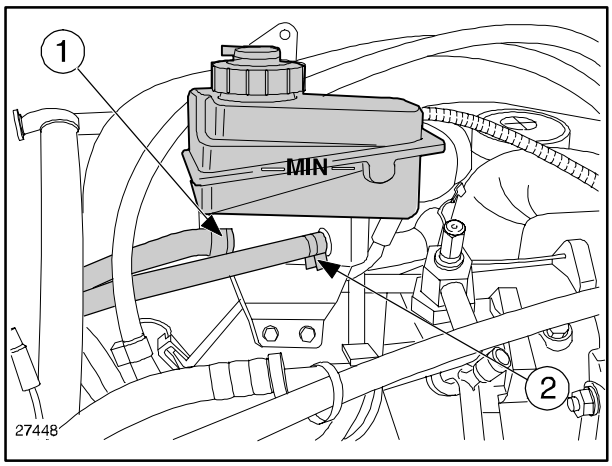

62

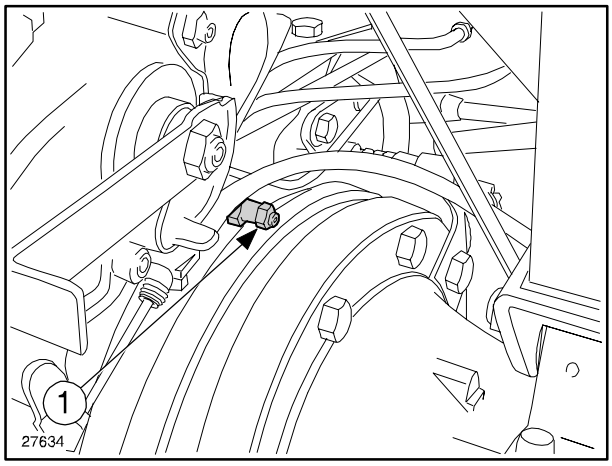

63

TRAILER BRAKE VALVE − Fig. 64

CAUTION: *On tractors with a hydraulic trailer brake valve, first bleed the air from screw* (**1**) fig. 63 *and then from screw* (**1**) fig. 64.

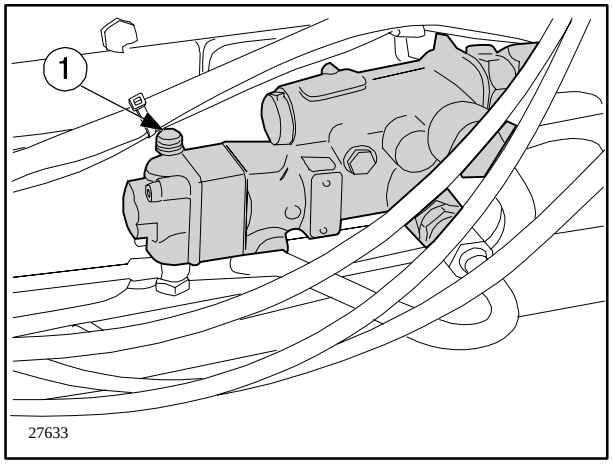

64

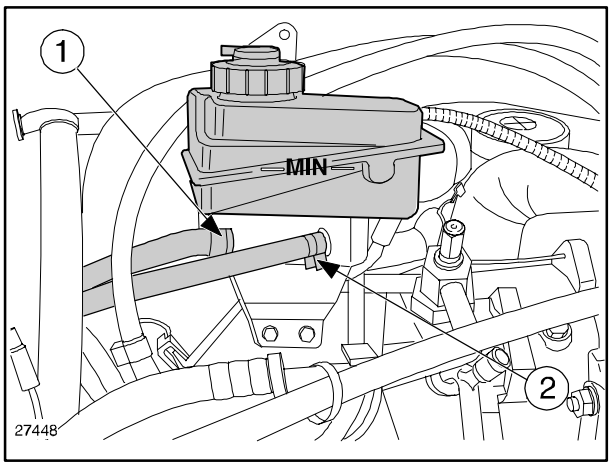

65

BLEEDING THE BRAKE FLUID CIRCUIT ON 4WD MODELS WITH FRONT BRAKES

Air must be bled out whenever carrying out work on the brake hydraulic system.
If braking problems are detected, refer to specialised personnel or carry out the circuit bleeding operation, closely observing the following instructions:

— after having completed the rear brake bleed procedure (see page 3−31), thoroughly clean the external parts of the unit around the bleed screws (**1** and **2**) fig. 66 and the cover of the hydraulic fluid reservoir (**2**) fig. 65;

— check that the right (**1**) fig. 65 brake reservoir is full both before and during the bleed operations;

— fully press down the left brake pedal, **slowly**, so that the oil is under pressure;

— keeping the pedal pressed down, loosen the bleed screw (**1**) fig. 66, by half a turn and allow the oil/air bubbles to come out;

— tighten the screw (**1**) fig. 66 and repeat the aforementioned operations until only oil (without air bubbles) comes out;

— press the brake pedal again to put the circuit under pressure, i.e.: when the pedal travel returns to normal;

— repeat the aforementioned operations for the brake circuit screw (**2**);

— on completion of this procedure, fill up the reservoir with oil;

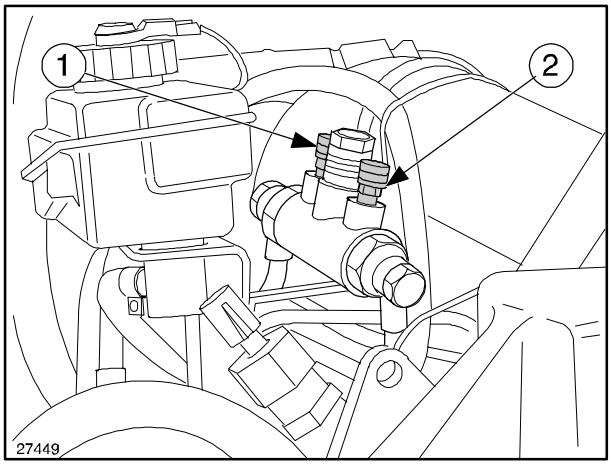

66

brake bleed operations (cont.)

— remove the plug (**1**) fig. 67;

— fully press down the left brake pedal, **slowly**, so that the oil is under pressure;

— keeping both pedals pressed down, loosen the bleed screw (**1**) fig. 68 − located inside the front final drive − by half a turn and allow the oil/air bubbles to come out;

— tighten the screw (**1**) fig. 68 and repeat the aforementioned operations until only oil (without air bubbles) comes out;

— press the brake pedal again to put the circuit under pressure, i.e.: when the pedal travel returns to normal;

— repeat the aforementioned operations for the right−hand part of the braking circuit;

— on completion of this procedure, fill up the reservoir with oil and tighten the plugs (**1**) fig. 67.

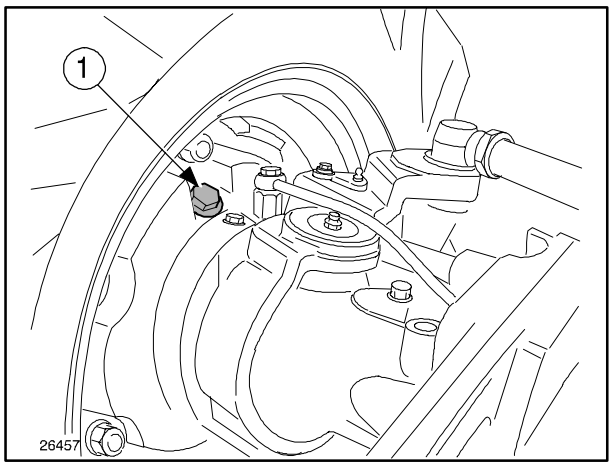

67

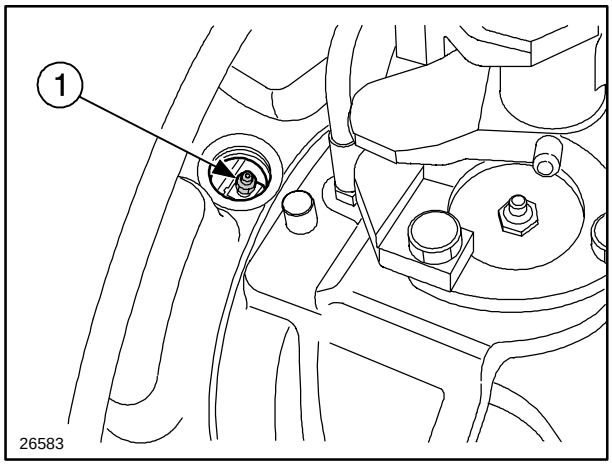

68

NOTE: *To match the front brake bleed screw (**1**) fig. 68 with the front final drive plug (**1**) fig. 67, place the latter in the vertical position.*

TRAILER BRAKE VALVE − Fig. 69

CAUTION: *On tractors with a hydraulic trailer brake valve, after having bled the air from both the rear and front brakes, bleed the trailer brake valve by means of the screw* (**1**).

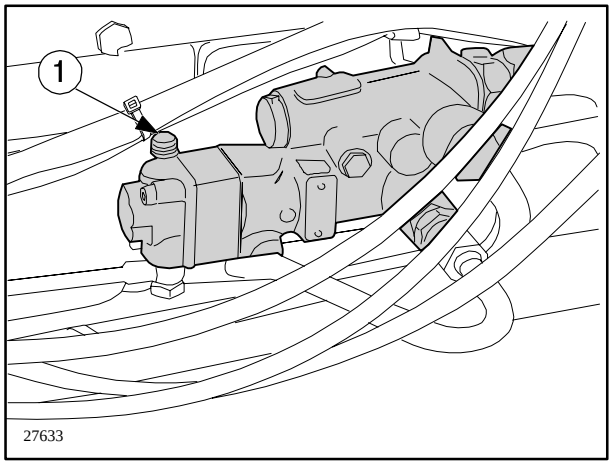

69

ELECTRICAL SYSTEM

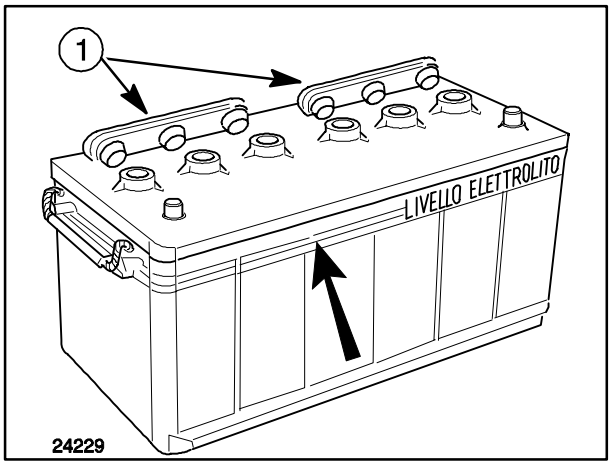

70

BATTERY − Fig. 70

The tractors are fitted with maintenance−free batteries.

Keep the upper part of the battery clean and dry.
Check that the electrolyte level reaches the top mark and never drops below the lower mark.
If necessary, open the caps (**1**) and add distilled water.

CAUTION: *Never fill up the battery with SULPHURIC ACID.*

Never use rapid “boost” battery chargers to recharge the battery.

Check the charge with a digital voltmeter as follows:

— connect the voltmeter to the two battery terminals, matching the symbols (negative with negative and positive with positive) and read the value on the instrument;

— compare the figure with the values on the table to establish the battery charge.

Voltage (V)	Charge condition
12.66	100%
12.45	75%
12.30	50%
12.00	25%

If voltage is approximately 12.30 V, recharge the battery immediately with current equivalent to $^{1}/_{10}$ of the capacity in ***Ah*** (a ***50 Ah*** battery must be charged to ***5 Amp***).

NOTE: *If the battery frequently requires topping up or tends to run down, have the electrical system on the tractor checked by your local New Holland dealer.*

CAUTION: *Always disconnect the cables before recharging the battery. The battery should be removed from the tractor and recharged at a safe distance.*

DANGER: *During recharging operations keep the area well−ventilated. Keep flames/ sparks well away and do not smoke.*

NOTE: *Batteries and storage batteries contain components that may be damaging to the environment if incorrectly disposed of after use.*
NEW HOLLAND strongly advise that all “dry” batteries, used in electrical or electronic systems, are returned to your local NEW HOLLAND dealer. The dealer will dispose of (or recycle) the batteries correctly. This procedure is requested by law in certain countries.

NOTE: *If an old battery needs to be replaced with a new one, proceed as follows:*

— *first disconnect the lead marked with (−) negative, then the lead with the (+) positive sign;*

— *fit the new battery in the seat, without over−tightening the retaining screws;*

— *clean the lead ends and connect to the battery terminals, ensuring that the (−) negative terminal is connected last;*

— *fully tighten the lead ends on the terminals and smear them with petroleum jelly.*

ADVICE ON STARTING THE ENGINE WITH A FLAT BATTERY OR WITHOUT A BATTERY

To avoid damaging the alternator and the incorporated voltage regulator, proceed as follows.

When, ***the tractor battery is partially discharged***, requiring the use of an auxiliary battery to start the engine, connect the auxiliary battery to the tractor battery, ensuring that ***the terminal symbols match*** positive with positive and negative with negative.
This rule must also be observed when recharging the battery with external power sources.

If the engine requires starting with a ***totally flat battery*** or when the tractor ***does not have a battery*** remember that:

— ***it is not possible*** to jump start the tractor by towing, as the electro−magnetically operated injection pump cut−off device will prevent the engine from starting;

— ***it is possible*** to start the tractor with an auxiliary battery after having first disconnected plug ***D***+, terminal ***B***+ and the condenser, ***but to no avail*** given that the engine will stop as soon as the external battery supply to the electromagnetic cut−off device is interrupted;

— ***avoid*** starting with an auxiliary battery with plug ***D***+, terminal ***B***+ and the condenser connected to the alternator;

— ***however, it is necessary*** to connect a 12 V battery, capable of starting the tractor, and then to replace it with the battery that is to be fitted on the tractor.

Under normal conditions, the engine must never run without plug ***D***+, terminal ***B***+ and the condenser disconnected from the alternator.

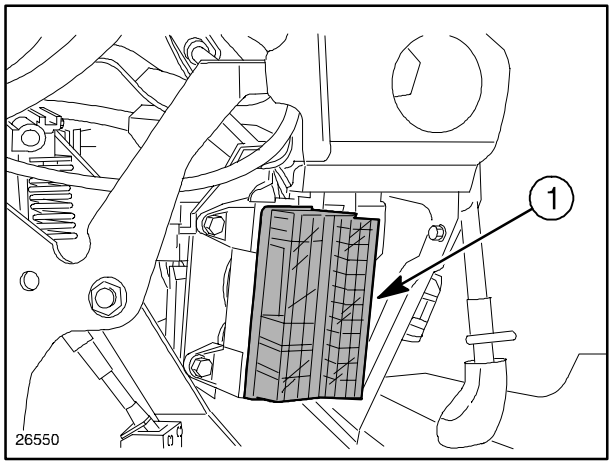

71

MAIN FUSE BOX − Fig. 71

On all models, the fuse box (**1**) is located on the left−hand side of the central console, beneath the steering wheel.

FUSEBOX − Fig. 72

On tractors fitted with cabs, the 6−way fuse box (**1**) is located inside the cab on the right−hand side upright. The relays are positioned under a plastic protective cover (**2**).

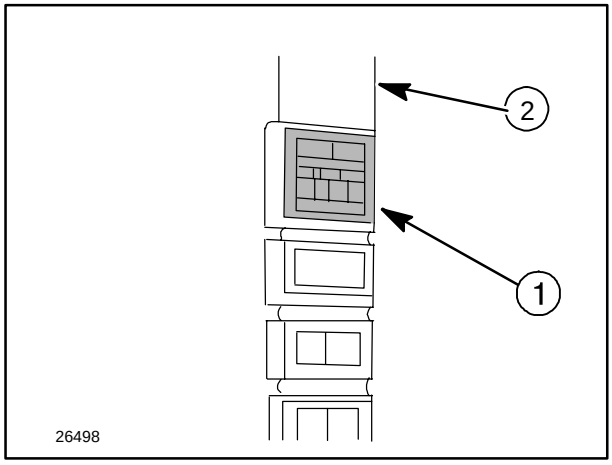

72

FUSE AND RELAY LAYOUT

DANGER: *If electrical system relays need to be changed, check that correct spare parts are used and that they are fitted in the correct positions. The use of structurally or functionally different relays − even if interchangeable − could seriously jeopardise tractor control.*

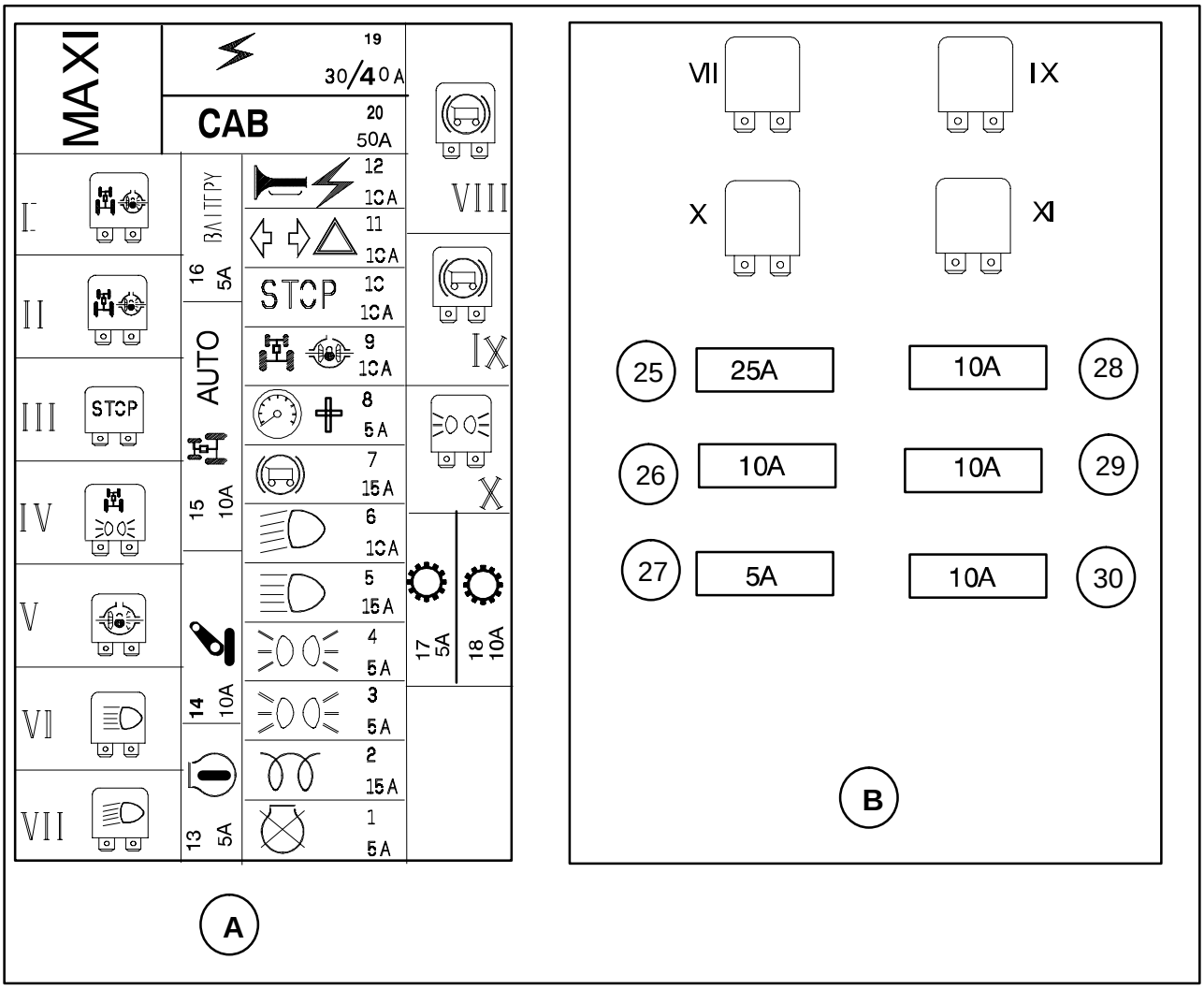

73

MAIN RELAYS BOX (A)

I. Differential lock and stop light circuit.
II. Differential lock and stop light circuit.
III. Brake light circuit.
IV. Sidelights circuit.
V. Differential lock.
VI. Full beam circuit.
VII. Dipped beam circuit.
VII. Trailer brakes circuit.
IX. Trailer brakes circuit.

CAB RIGHT−HAND SIDE UPRIGHT RELAYS (B)

VIII. Cab users key circuit.
IX. Rear work lights circuit.
X. Front work lights circuit.
XI. Compressor circuit.

Main fuse box protection		
Fuses	***Amp.***	***PROTECTED CIRCUITS***
1	5	Engine cut−out electromagnet.
2	15	Thermostarter.
3	15	Front right−hand and rear left−hand side lights, 7−pole power socket.
4	5	Front left−hand and rear right−hand side lights, control instrument panel light.
5	15	Full beam.
6	15	Dipped lights.
7	15	Trailer brake circuit, adjustable lights, hydraulically adjustable seat.
8	5	+ Instrument common.
9	10	Differential lock and 4WD circuit.
10	15	Direction indicators, work lights and VIII relay excitation (cab), adjustable lights.
11	25	Hazard lights circuit, indicator lights circuit.
12	10	Horn, 8 A power socket, full beam lights flasher, digital instrument, buzzer.
13	5	Starter safety circuit.
14	10	Front lift.
15	10	Permanent 4WD circuit.
16	5	Electronic control centre power supply (+key).
17	5	Power shuttle circuit.
18	10	Power shuttle circuit.
19	30 40	ISO power socket. NASO power socket.
20	50	Cab system.

Cab right−hand upright fuse box protection		
Fuses	***PROTECTED CIRCUITS***	***Amp.***
25	Fan unit, radio.	25
26	Window wiper/washer.	10
27	Rear window wiper/washer.	5
28	Overhead light, rotating lamp, cigar lighter and radio.	–
29	Rear work lights.	10
30	Front work lights.	10

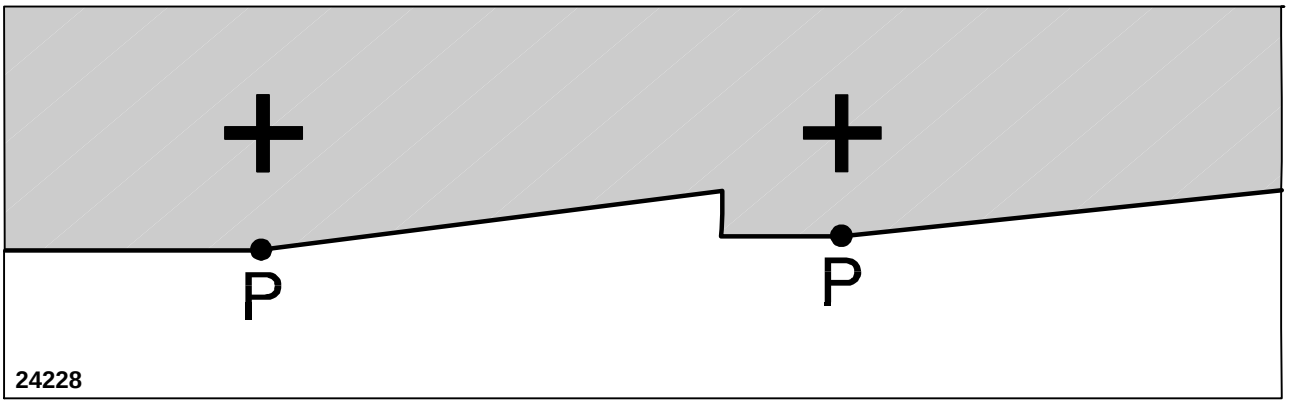

74

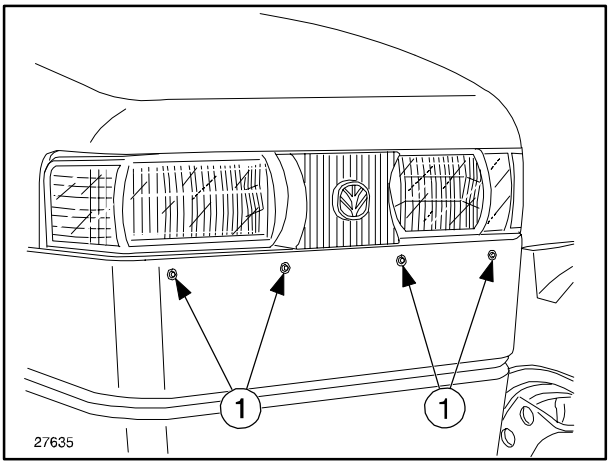

75

FRONT HEADLIGHT ADJUSTMENT AND REPLACEMENT

Adjust the angled position of the front lights as follows:

— park the unloaded tractor on flat ground, with the tyres inflated to the specified pressure, facing a shaded white wall;

— mark two crosses on the wall, corresponding to the centre of the headlights, as shown in fig. 74;

— reverse the tractor by approximately 196.85 inch. (5 metres) and turn the beam full on;

— adjust the beams using the screws (**1**) fig. 75.

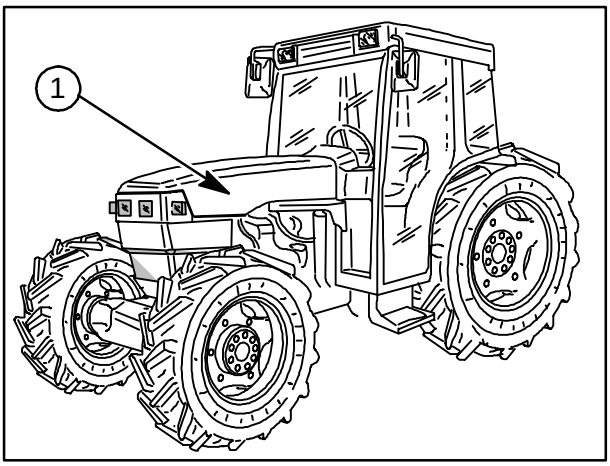

76

FRONT HEAD LAMP BULB REPLACEMENT − Fig. 76

WARNING: *When handling halogen bulbs, only touch the metal parts, never the bulb. If the bulb comes into contact with your fingers, the intensity of the light emitted will be reduced, adversely affecting its service life.*
If accidentally touched, clean the bulb with a cloth soaked in alcohol and leave to dry.

Replace blown bulbs as follows:

− Raise the bonnet (**1**) fig. 76;

front head lamp bulb replacement (cont.)

- detach the connector (**1**) fig. 77;
- remove the rubber protector (**2**) fig. 77;
- unclip the retaining spring (**3**) fig. 77 and unscrew counter−clockwise.

Replace the old bulb with a new halogen bulb of the same power (55÷60 W).

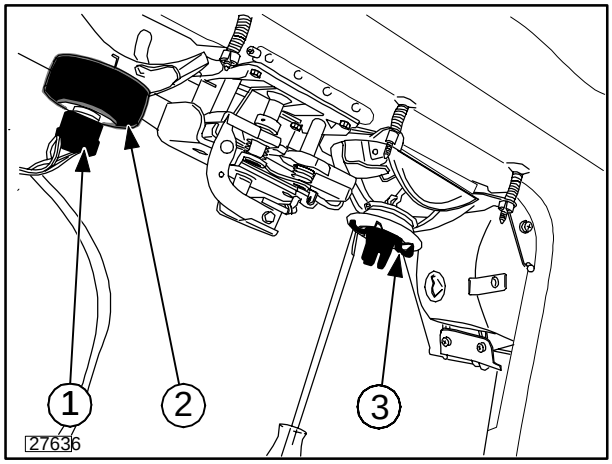

77

REPLACING THE REAR, BRAKE AND DIRECTION INDICATOR LAMP BULBS − Fig. 79

Remove the transparent cover (**1**), press the bulb in and twist counter−clockwise to remove.
Replace with a new bulb of the same power:

- indicator light bulbs (**1**) 21W;
- double filament STOP and sidelight bulbs (**2**) 21W/5W.

NOTE: *The transparent orange cover must be fitted facing the outside of the mudguard.*

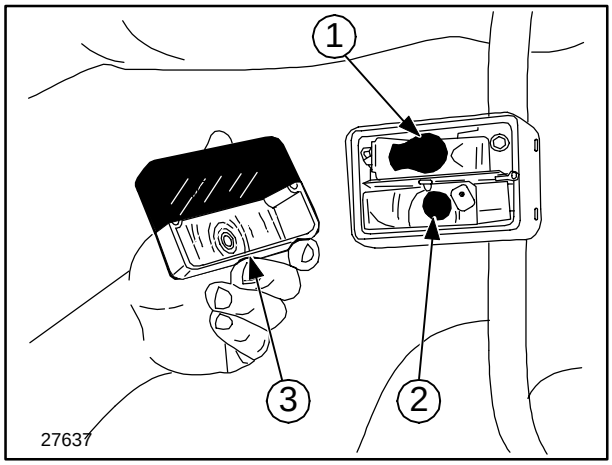

78

REPLACING THE FRONT SIDELIGHT AND DIRECTION INDICATOR LAMP BULBS − Fig. 78

Remove the transparent cover (**3**), and replace with a new bulb of the same power:

- indicator light bulbs (**1**) (21W): press the bulb in and twist counter−clockwise to remove;
- sidelight bulbs (**2**) (5W): pull the bulb outwards to remove.

NOTE: *The transparent orange cover must be fitted facing upwards.*

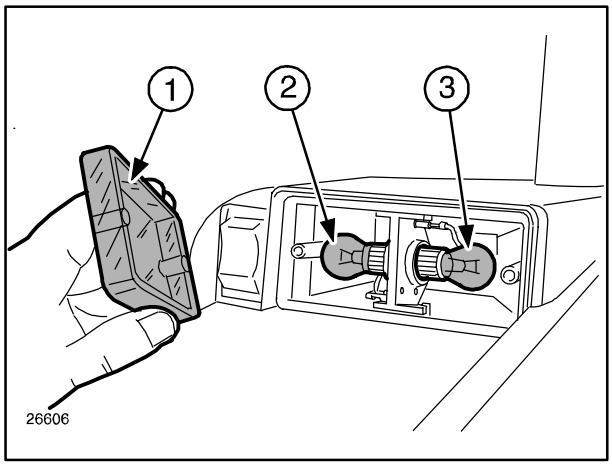

79

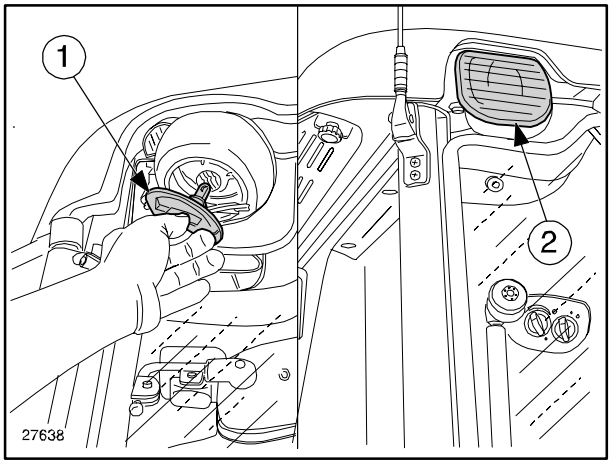

80

NUMBER PLATE LIGHT − Fig. 80

Remove the protective cover (**2**) and, if the lamp bulb (**1**) is burnt out, replace it with a new bulb of the same power (5 W).
Pull outwards to remove.
Press slightly to re−fit.

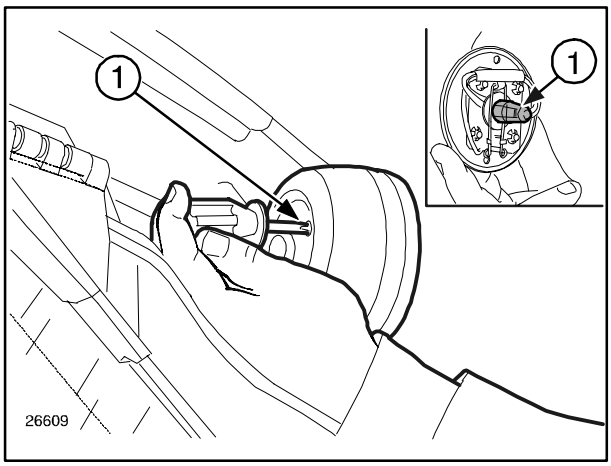

81

FRONT AND REAR WORK LIGHTS − Fig. 81

Turn the light, rotate the cover (**1**) and extract. *Pull outwards to remove.*

NOTE: *Never touch the new bulbs with your hands, hold the bulb with a cloth or through its wrapping.*

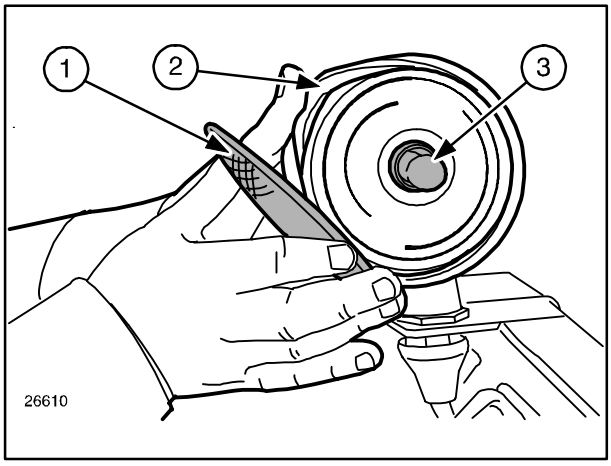

82

WORK LIGHTS FOR TRACTORS WITH ROLL BARS − Fig. 82

To access the lamp, pull back the rubber hood (**2**) and remove the transparent cover (**1**).
Press the bulb (**3**) in and twist counter−clockwise to remove.
Replace with a new bulb of the same power (35 W).

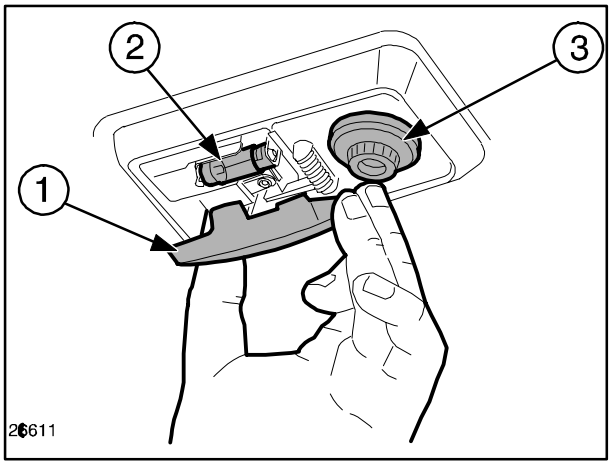

83

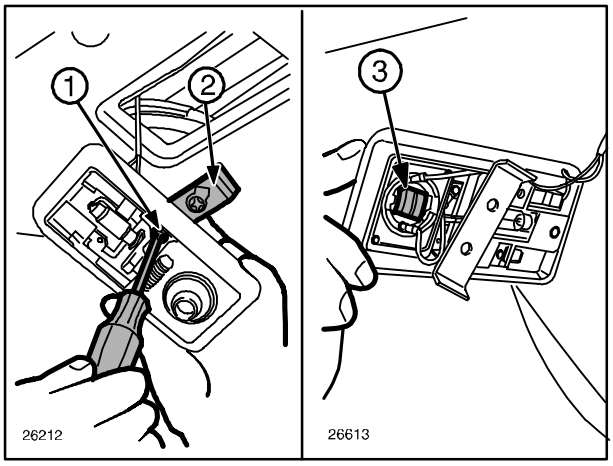

84

REPLACING THE COURTESY LIGHT AND ADJUSTABLE READING LIGHT − Figs. 83 and 84

To access the two lamps, proceed as follows:

− use a screwdriver to prise up the transparent cover (**1**) and remove.

Courtesy light − Fig. 84

− pull the lamp (**2**) downwards (pressure fitted) and replace it with a new bulb of the same power (10 W).

Adjustable reading light − Fig. 84

− detach the ground lead from the battery to power down the lamp holder;
− loosen the screw (**1**) fig. 84;
− using a screwdriver, turn the retaining bracket (**2**) fig. 84 and extract;
− turn the lamp (**3**) fig. 84 and replace with a new bulb of the same power (5 W).

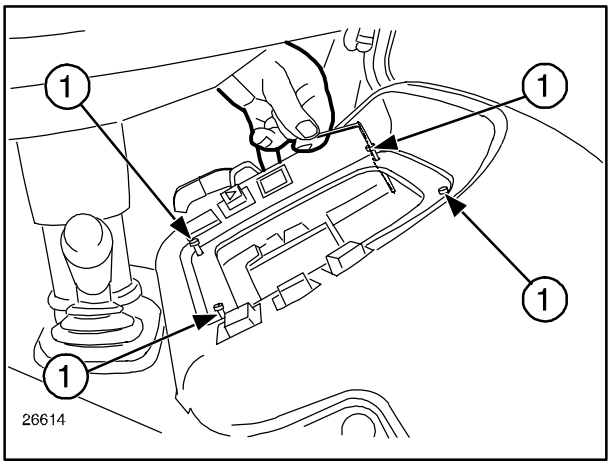

85

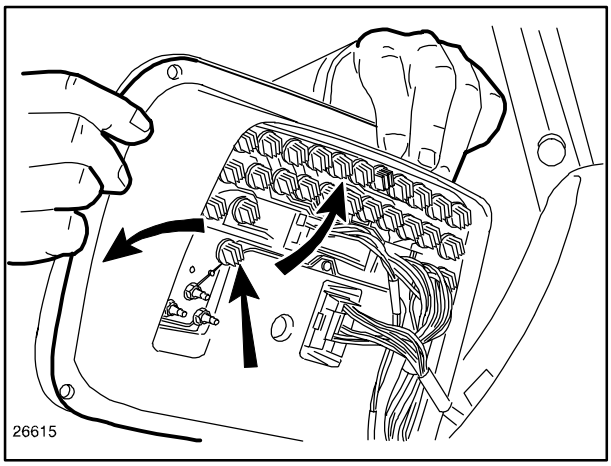

86

REPLACING MULTIPLE INSTRUMENT PANEL INDICATORS − Figs. 85 and 86

To access the indicators, proceed as follows:

− loosen the four retaining screws (**1**) fig. 85;
− remove the instrument from its seat;
− rotate the burnt out indicator counter−clockwise by $^{1}/_{4}$ of a turn;
− replace with a new indicator bulb of the same power (2 W).

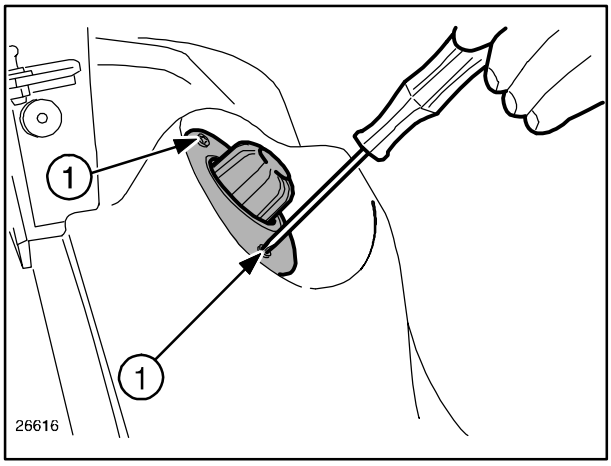

87

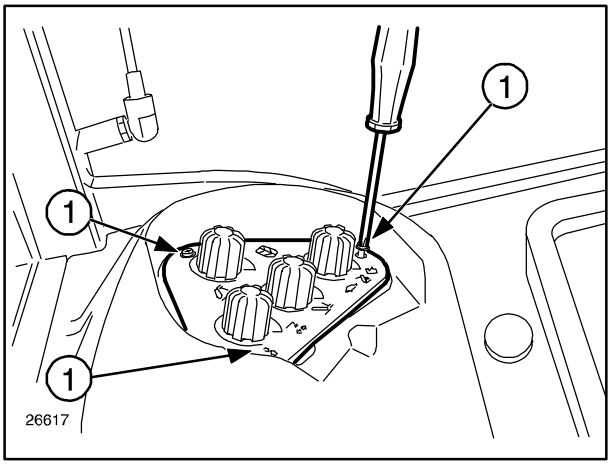

88

REPLACING ELECTRONIC LIFT UNIT CONTROL INDICATOR LIGHTS

To replace faulty indicator lights, first remove the plate as described below:

- loosen the retaining screws (**1**) figs. 87 and 88;
- remove the plates figs. 89 and 90;
- rotate the burnt out indicator counter−clockwise by $^1/_4$ of a turn, extract and replace with a new indicator bulb of the same power (1.2 W).

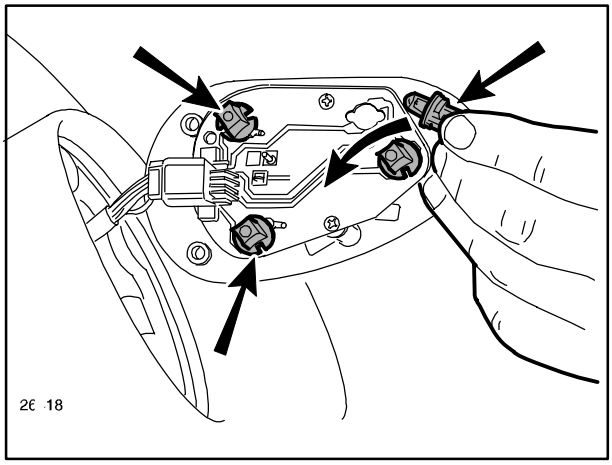

89

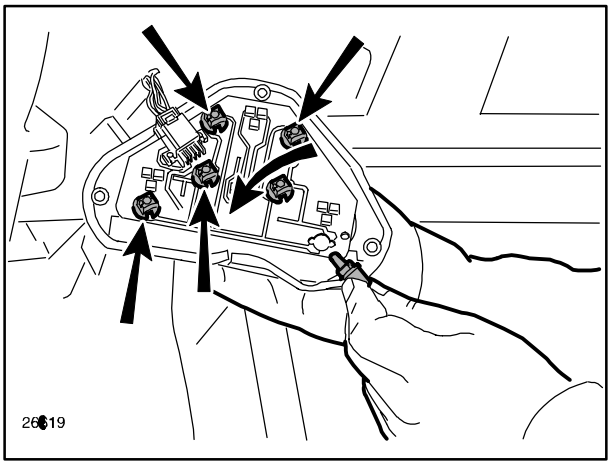

90

RECOMMENDATIONS FOR BODYWORK MAINTENANCE

Protection against atmospheric agents

New Holland have already implemented a series of measures to protect the tractor from the deterioration and corrosion that may be caused by various external elements, including:

— salinity and atmospheric humidity;

— atmospheric pollution (industrial areas);

— abrasive action of solid substances;

— use of the tractor in the presence of aggressive chemical and/or organic substances;

— physical damage such as dents, abrasions or deep scratches.

The technical response to these problems is as follows:

— high corrosion−resistant zinc plating;

— paint systems and products that defend the tractor against corrosion and abrasion;

— application of suitable hardened plastic coatings at points which are particularly vulnerable to corrosion (edges, projections and sheet−metal welded joints);

Unfortunately, external agents act in various ways according to environmental conditions and tractor use. However, if the user takes enough care, the tractor can be maintained better and for longer.

The following information is provided to help achieve this aim.

Bodywork and cab

In the event of abrasions or deep scratches that expose the metal under the paintwork, the area concerned will need to be retouched and treated immediately with specified original products, as follows:

— thoroughly rub down the area with abrasive paper;

— apply the primer;

— leave to dry and then rub down lightly;

— apply the paint;

— polish.

Maintenance of the paintwork is normally carried out by washing, at intervals that depend on the conditions of use and the environment. In areas prone to atmospheric pollution and coastal zones, washing should be carried out more frequently, whereas if organic or chemical substances are present, wash ***immediately*** after the tractor is used. Use a low pressure water spray, sponge down with a solution of (2 ÷ 4% of shampoo in water), rinsing the sponge frequently. Rinse the tractor thoroughly and dry, if possible, with a jet of air.

Avoid washing the tractor after it has been standing in the sun and when the engine bonnet is still hot. This will help to protect the shine on the paintwork.

Protect the paintwork by means of periodical polishing with special products (silicone waxes). Use wax polish when the paintwork starts to dull, as this has a slightly abrasive action.

CAB MAINTENANCE

After having carried out the external maintenance on the cab, proceed with the following checks:

1. Periodically check that there is no water standing in areas covered with mats or padding.

2. Protect the hinges and locks on the doors, roof and opening windows with lubricants and water repellents.

3. Clean the windows with suitable detergents. If necessary, use sulphuric ether.

4. Remove the windscreen wiper blade and sprinkle talcum powder on the rubber surfaces.

5. Leave the doors or roof hatch partially open.

PROLONGED TRACTOR INACTIVITY

The following precautions should be taken if the tractor remains unused for prolonged periods.

- The engine is fitted with a rotary injection pump; follow the instructions provided on page 3−30 in this section.

- Protect the engine as follows:

1. For storage periods of approx. one month: no steps are necessary if the engine oil has not yet exceeded 100 hours of work. Otherwise, proceed as described in the paragraph below.
2. For storage periods of over one month, drain the oil from the engine while hot, fill up the reservoir with ***AMBRA SUPER GOLD*** oil and run the engine for a few minutes at medium rpm.
3. Remove the external air filter cartridge and clean according to the instructions provided in this section.
4. Do not drain off the engine cooling system. During winter periods, make sure that the proportions of the water / ***AMBRA AGRIFLU***, fluid (supplied with the tractor) are as specified. Follow the instructions on page 3−27.

- Clean the tractor and the bodywork. Protect the paintwork with silicone wax and use protective lubricants on non−painted metal parts; always keep the tractor in a covered, dry and well−ventilated place.

- Check that all controls are left in neutral (including electrical switches and the parking brake control).

- Do not leave the ignition key in the switch.

- Make sure that the operating cylinder rods (hydrostatic steering, lift, etc.) are in the fully closed position.

- Fill the fuel tank with diesel fuel.

- For tractors fitted with cabs, see page 3−43.

- Remove the battery, clean the cover and smear the terminals and lead ends with petroleum jelly; store the battery in a ventilated zone, not exposed to temperatures of less than 50 °F (10 °C) and away from direct sunlight.

- Check the battery charge condition using a voltmeter, as described on page 3−34.

- Fit stands or other suitable supports under the axles to raise the wheels off the ground. With the tractor raised, it is advised to deflate the tyres. If not, raise the tractor and check the tyre pressure periodically.

- Cover the tractor with a non−plastic non−waterproof sheet.

WARNING: *When the engine is to be re−started at the end of the storage period, closely follow the instructions shown on page 2−3 and the information concerning engine start up.*

FUEL AND LUBRICATION SPECIFICATIONS

COMPONENT	QUANTITY litres (USA Gals)	RECOMMENDED NEW HOLLAND PRODUCT	NEW HOLLAND SPECIFICATION	INTERNATIONAL SPECIFICATION
Cooling system: without cab with cab	10.0 (2.64) 12.0 (3.17)	Water and **AMBRA AGRIFLU liquid 50% + 50%**	NH 710 A	–
windscreen washer bottle .	2.0 (0.52)	Water and detergent liquid	–	–
Fuel tank:	75 (19.81)	Decanted and filtered diesel fuel	–	–
Engine sump: without filter: . . . . . . with filter:	6.7 (1.76) 7.5 (1.98)	Oil **AMBRA SUPER GOLD** **AMBRA SUPER**	NH 324G (SAE 10W−30) NH 330G (SAE 15W−40) NH 301C (SAE 10W) NH 302C (SAE 20W) NH 303C (SAE 30W) NH 304C (SAE 40W)	API CF−4/SG CCMC D4 MIL−L−2104E API CCMC D4 MIL−L−2104C
Brakes circuit . . . . . . with front brakes	0.7 (0.18) 0.5 (0.13)	Oil **AMBRA BRAKE LHM**	NH 710 A	ISO 7308
Front axle: housing casing . . . . . . final drives without brakes TN55D/S (each) . . . . . . final drives with brakes TN55D/S (each) . . . . . . final drives without brakes TN65, TN70D/S TN75D/S (each) . . . . . . final drives with brakes TN65, TN70D/S TN75D/S (each)	4.5 (1.18) 0.8 (0.21) 1.3 (0.34) 1.0 (0.26) 1.5 (0.39)	Oil **AMBRA MULTI G**	NH 410 B	API GL4 ISO 32/46 SAE 10W−30
Rear axle (bevel drive, final drives and brakes), transmission, hydraulic lift, PTO and hydraulic steering:	42 (11.09)			
Grease fittings	–	Grease **AMBRA GR9**	NH 710 A	NLGI 2
Air conditioning system − coolant . . . . . . − oil	kg 0.80 (1.65 lbs) kg 0.15 (0.33lbs)	–	–	R−134a SP20

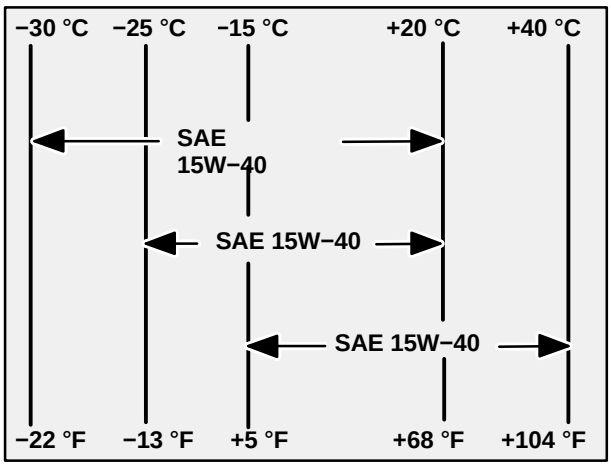

91

Select the correct engine oil viscosity by referring to the table on the right.

NOTE: *In areas where prolonged periods of extreme temperatures are encountered, local lubrication practices are acceptable. The use of SAE 5W with extremely low temperatures and SAE 50 for extremely high temperatures is advised.*

Sulphur in fuel

The engine oil change frequency is shown in Section 3. However, fuel available locally may have a high sulphur content; in this event, modify the engine oil change procedure as follows:

Sulphur content %	Oil change period
below 0.5	normal
0.5 ÷ 1.0	half the normal
more than 1.0	one quarter normal

NOTE: *Avoid using fuel with sulphur content higher than 1.3%.*

SECTION 4

TROUBLESHOOTING

LOCATING AND IDENTIFYING PROBLEMS

INTRODUCTION

The following information is intended to help in the identification and correction of any tractor faults or malfunctions.

PROBLEM CODES − AREAS AFFECTED		
The following information lists problems which could arise, their causes and appropriate action. The areas affected are dealt with in the following order:		
Engine	Hydraulic system	Brakes
Electrical system	Hydraulic lift	Cab

ENGINE

PROBLEM	POSSIBLE CAUSE	SOLUTION
The engine will not start, or starts with difficulty	Starting procedure incorrect	See starting procedure
	Fuel level low or empty	Check fuel level
	Air in fuel system	Bleed fuel system
	Incorrect engine oil viscosity	Correct oil viscosity
	Fuel not suited for ambient temperature	Use correct type of fuel for temperature conditions
	Fuel system contaminated	Clean system
	Fuel filter clogged	Replace filter element
	Fuel injector/s fault	Contact your NEW HOLLAND dealer
The engine functions incorrectly and/or cuts out	Fuel system contaminated	Clean system
	Fuel injector/s fault	Contact your NEW HOLLAND dealer
The engine does not reach maximum power	Engine overload	Change to lower gear or reduce load
	Air filter clogged	Carry out maintenance on air filter
	Incorrect fuel type	Use correct fuel
	Low engine running temperature	Check thermostat
	Fuel injector/s fault	Have your dealer check the injectors
	Implement incorrectly set	See implement manual

ENGINE

PROBLEM	POSSIBLE CAUSE	SOLUTION
The engine does not reach maximum power (cont.)	Implement incorrectly set	See implement manual
	Incorrect valve clearance	Check and adjust
	Idling speed too low	Contact your NEW HOLLAND dealer
Abnormal engine knocking	Oil level low	Fill up with oil
	Oil pressure low	Contact your NEW HOLLAND dealer
Low engine operating temperature	Thermostat fault	Replace thermostat
Oil pressure low	Oil level low	Add oil as required
	Incorrect oil grade or viscosity	Drain and refill with correct oil grade and viscosity
Excessive oil consumption	Oil level too high	Reduce oil level
	Unsuitable oil viscosity	Use specified oil viscosity
	External oil leaks	Repair leaks
	Breather pipe filter clogged	Replace breather pipe filter
Engine overheating	Radiator core clogged	Clean
	Excessive engine load	Change to lower gear or reduce load
	Engine oil level low	Fill up with oil
	Coolant level low	Fill to fluid level in expansion tank. Check system for leaks
	Radiator cap defective	Replace cap
	Fan belt slipping or worn	Check tensioner. Replace belt if worn

ENGINE

PROBLEM	POSSIBLE CAUSE	SOLUTION
Engine overheating	Cooling system clogged	Flush cooling system
	Thermostat fault	Check thermostat
	Hose connectors leaking	Tighten hose connectors
	Temperature indicator or gauge malfunction	Contact your NEW HOLLAND dealer
Excessive fuel consumption	Incorrect fuel type	Use correct fuel type
	Air filter dirty or clogged	Carry out maintenance on air filter
	Engine overload	Change to lower gear or reduce load
	Incorrect valve clearance	Check and adjust
	Implement incorrectly set	Refer to implement manual for correct operation
	Low engine temperature	Check thermostat
	Too much ballast	Adjust ballast to correct weight
	Fuel injection nozzles clogged	Have your dealer check the injectors

ELECTRICAL SYSTEM

PROBLEM	POSSIBLE CAUSE	SOLUTION
The electrical system does not work	Battery terminals loose or corroded	Clean and tighten terminals
	Sulphated batteries	Check that the battery charge is at least 12.6 volts. Check electrolyte level and specific gravity
Low starter motor speed and difficulty in starting engine	Connections loose or corroded	Clean and tighten connections
	Battery flat	Check that the battery charge is at least 12.6 volts. Check electrolyte level and specific gravity
	Incorrect engine oil viscosity	Use correct oil viscosity for temperature conditions
Starter motor does not work	Gear lever engaged	Move gear lever to neutral
	Connections loose or corroded	Clean and tighten connections
	Batteries totally flat	Recharge or replace batteries
Battery charge light stays on when engine is running	Engine idling speed too low	Increase idling speed
	Alternator belt loose	Check belt tensioner
	Battery fault	Check that the battery charge is at least 12.6 volts. Check electrolyte level and specific gravity
	Alternator fault	Have alternator checked by dealer or authorised service technicians
Batteries not charging	Terminals loose or corroded	Clean and tighten terminals
	Sulphated batteries	Check that the battery charge is at least 12.6 volts. Check electrolyte level and specific gravity
	Belt loose or worn	Check belt tensioner. Replace belt, if necessary.
The battery charge light flashes to indicate excessive charge voltage	Alternator fault	Have alternator checked by dealer

HYDRAULIC SYSTEM

PROBLEM	POSSIBLE CAUSE	SOLUTION
The hydraulic system does not work correctly	Oil level low	Fill up system
	Hydraulic filter clogged	Replace hydraulic filter
	Hydraulic system fault	Contact your dealer
Hydraulic fluid overheating	Fluid level too high or too low	Fill up with oil
	Fluid filter element clogged	Replace filter
	Flow regulation incorrectly set	Set to lower capacity
Hoses incorrectly joined together	Incorrect male couplers	Replace couplers with standard ISO−1/2″ connectors, available from your dealer
Automatic control valve pin release mechanism triggered too soon	Automatic release pressure incorrectly set	Adjust automatic release pressure setting
Remote control does not work	Hoses incorrectly joined together	Connect hoses correctly
	Check oil flow in half couplers	Operate control levers. If problem persists, replace male couplers
	System overload	Reduce load or use a suitable cylinder

HYDRAULIC LIFT AND THREE POINT LINKAGE

PROBLEM	POSSIBLE CAUSE	SOLUTION
The linkage does not move when the control lever is operated	Tubes incorrectly connected	Connect linkage cylinder tubes correctly
	Linkage overload	Reduce load
Linkage does not lift fully	Arm lift upper limit control incorrectly set	Adjust arm lift upper limit
Linkage lowers slowly	Lowering speed control incorrectly set	Check valves
The hydraulic lift operates slowly in draft control	Mixed draft/position control incorrectly set	Adjust mixed draft/position control
	Lowering speed too slow	Check valves
	Implement does not work satisfactorily	Adjust implement settings
The hydraulic lift operates too fast in draft control	Mixed draft/position control incorrectly set	Check valves
Electronically controlled hydraulic lift error code signal		Contact your dealer

BRAKES

PROBLEM	POSSIBLE CAUSE	SOLUTION
Pedals soft when engine off	Air in braking system	Contact your dealer
Pedal presses fully down when engine off	Brake piston seals leaking	Contact your dealer
	Brake disks worn	Contact your dealer
	Brake release leaking	Contact your dealer
	Brake valve/s leaking	Contact your dealer
Excessive pedal travel or resistance with engine running	Brake valve/s leaking	Contact your dealer
	Air in braking system	Contact your dealer
	Brake piston seals leaking	Contact your dealer
	Brake release leaking	Contact your dealer

CAB

PROBLEM	POSSIBLE CAUSE	SOLUTION
Dust in cab	Ineffective filter seal	Check condition of filter seal
	Filter clogged	Clean or replace filter
	Filter defective	Replace filter
	Too draughty	Seal draught
Inadequate air circulation	Filter clogged or air circulation filter clogged	Clean or replace filter/s
	Heater or humidifier radiator core clogged	Contact your dealer
Air conditioning not cooling correctly	Condenser clogged	Clean the radiator, oil exchanger and condenser
	Refrigerant low	Check inspection window for bubbles. Contact your dealer
	Compressor belt slips or is damaged	Check automatic belt tensioner and belt wear condition
	Heating on	Turn the temperature control fully counter−clockwise for maximum cooling.

SECTION 5
SPECIFICATIONS

The data on the following pages is provided for your information and guidance. For further details concerning your tractor, contact your dealer.

DIMENSIONS OF 2−WD TN55D, TN65D, TN70D AND TN75D MODELS WITH ROLL BAR

Tyre combinations: Front **7.50−16** Rear **420/70−30**

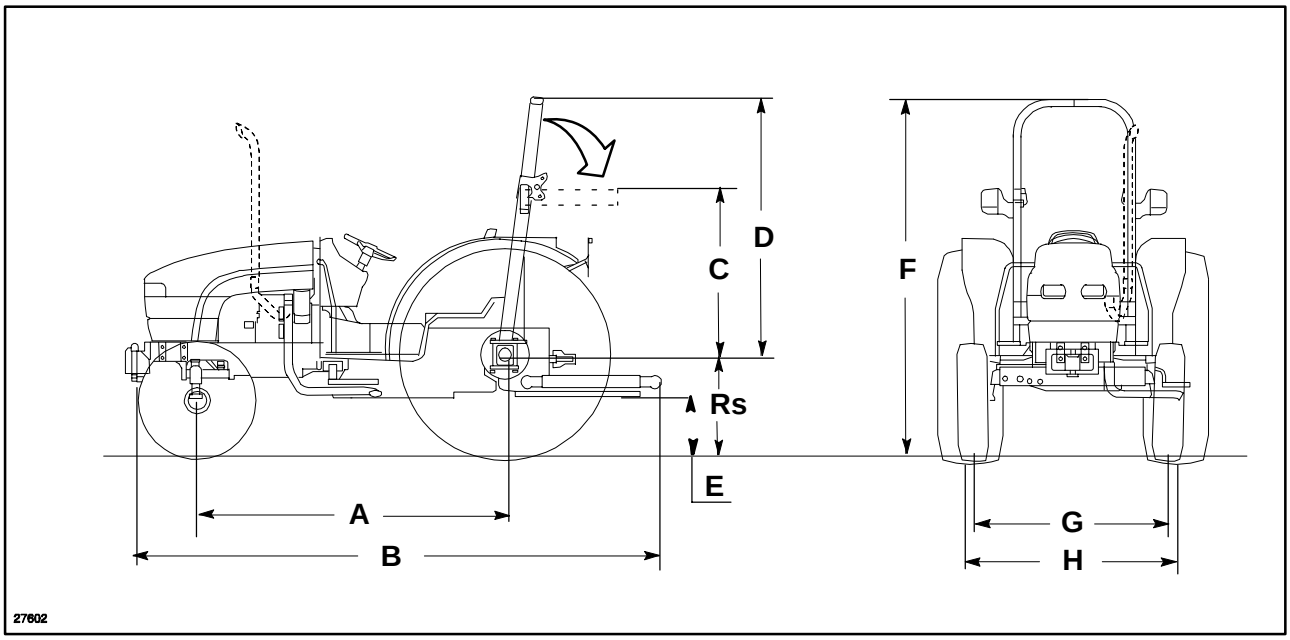

1

Dimensions mm (inches)	**TN55D**	**TN65D**	**TN70D**	**TN75D**
Rs	Tyre radius under load			
A	2130 (83.85)			
B	3390 (133.46)			
C	1268 (49.92)			
D	1781 (70.11)			
E	2411 (94.92)			
E	334 (13.14)			
G	1357 ÷ 1957 (63.42 to 77.04)			
H	1333 ÷ 1920 (52.48 to 75.59)			

DIMENSIONS OF 2−WD TN55D, TN65D, TN70D AND TN75D MODELS WITH CAB

Tyre combinations: Front **7.50−16** Rear **420/70−30**

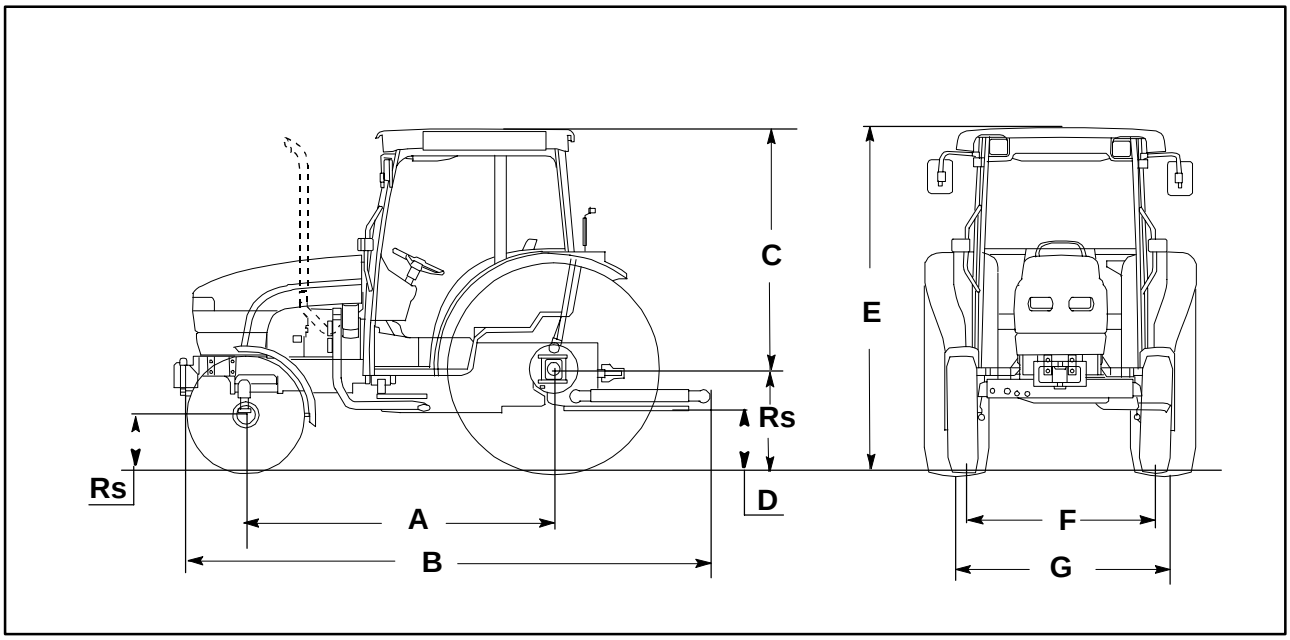

2

Dimensions mm (inches)	TN55D	TN65D	TN70D	TN75D
Rs	Tyre radius under load			
A	2065 (81.29)			
B	3325 (130.90)			
C	1672 (65.82)			
D	334 (13.14)			
E	2302 (90.62)			
F	1357 ÷ 1957 (63.42 to 77.04)			
G	1333 ÷ 1920 (52.48 to 75.59)			

DIMENSIONS OF 4WD TN55D, TN65D, TN70D AND TN75D MODELS WITH ROLL BAR

Tyre combinations: Front **360/70−20** Rear **420/70−30**

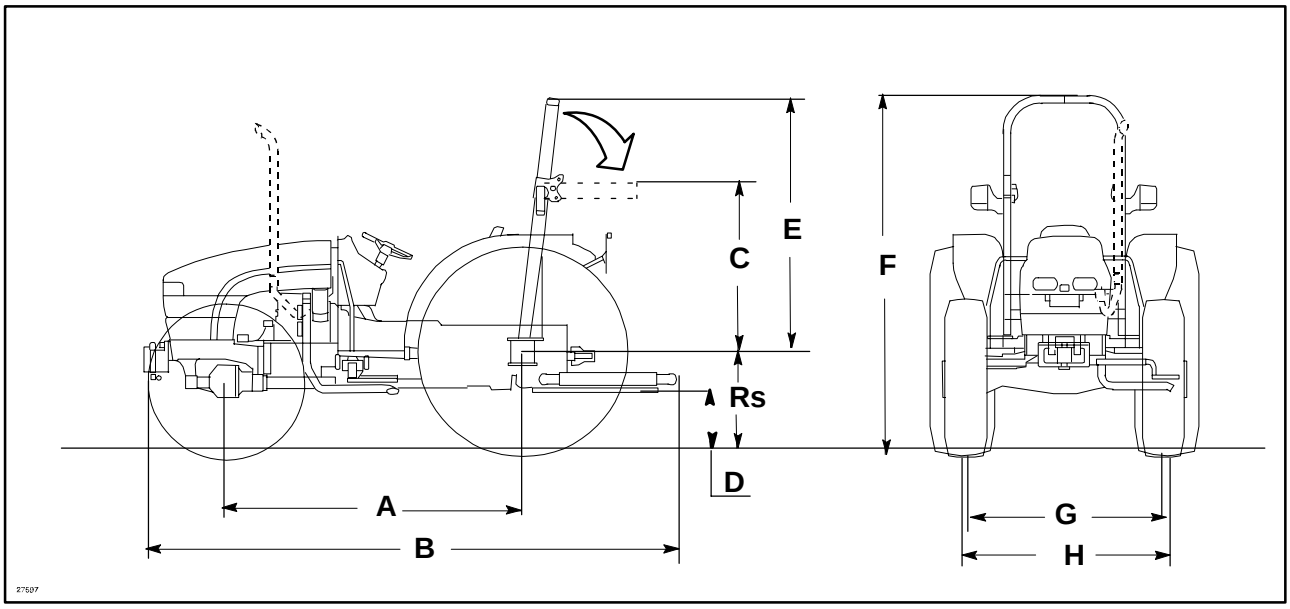

3

Dimensions mm (inches)	**TN55D**	**TN65D**	**TN70D**	**TN75D**
Rs	Tyre radius under load			
A	2065 (81.29)			
B	3440 (135.43)			
C	1268 (49.92)			
D	334 (13.14)			
E	1781 (70.11)			
F	2411 (94.92)			
G	1382 ÷ 1920 (54.40 to 75.59)			
H	1333 ÷ 1920 (52.48 to 75.59)			

DIMENSIONS OF 4WD TN55D, TN65D, TN70D AND TN75D MODELS WITH CAB

Tyre combinations: Front **360/70−20** Rear **420/70−30**

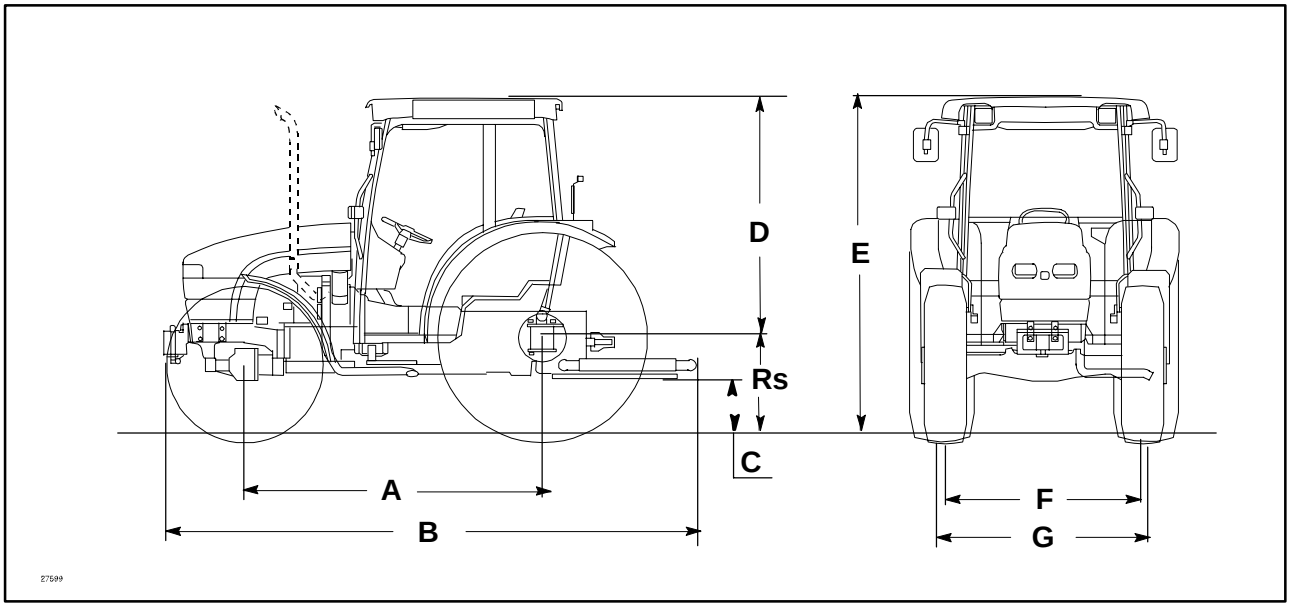

4

Dimensions mm (inches)	**TN55D**	**TN65D**	**TN70D**	**TN75D**
Rs	Tyre radius under load			
A	2065 (81.29)			
B	3440 (135.43)			
C	334 (13.14)			
D	1672 (65.82)			
E	2032 (80.00)			
F	1382 ÷ 1812 (54.40 to 71.33)			
G	1333 ÷ 1920 (52.48 to 75.59)			

DIMENSIONS OF 4WD TN55S, TN65S, TN70S AND TN75S MODELS WITH ROLL BAR

Tyre combinations: Front **360/70−20** Rear **420/70−30**

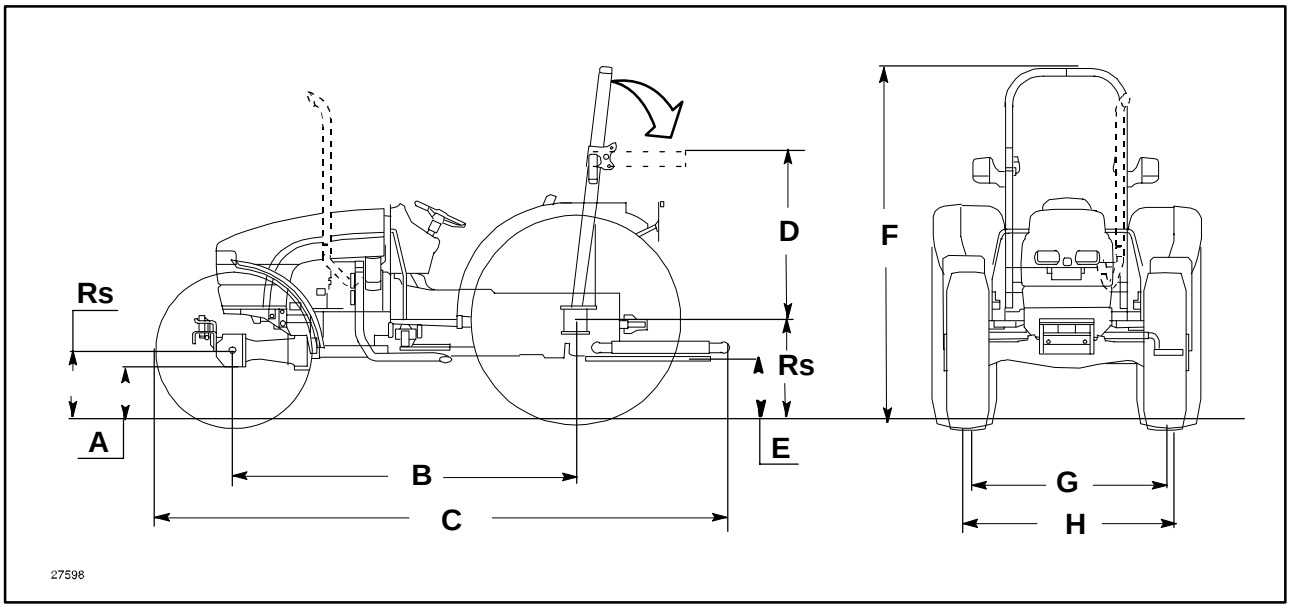

5

Dimensions mm (inches)	**TN55S**	**TN65S**	**TN70S**	**TN75S**
Rs	Tyre radius under load			
A	330 (12.99)			
B	2375 (93.50)			
C	3750 (147.63)			
D	1268 (49.92)			
E	334 (13.14)			
F	2411 (94.92)			
F	1382 ÷ 1812 (54.40 to 71.33)			
G	1333 ÷ 1920 (52.48 to 75.59)			

DIMENSIONS OF 4WD TN55S, TN65S, TN70S AND TN75S MODELS WITH CAB

Tyre combinations: Front **360/70−20** Rear **420/70−30**

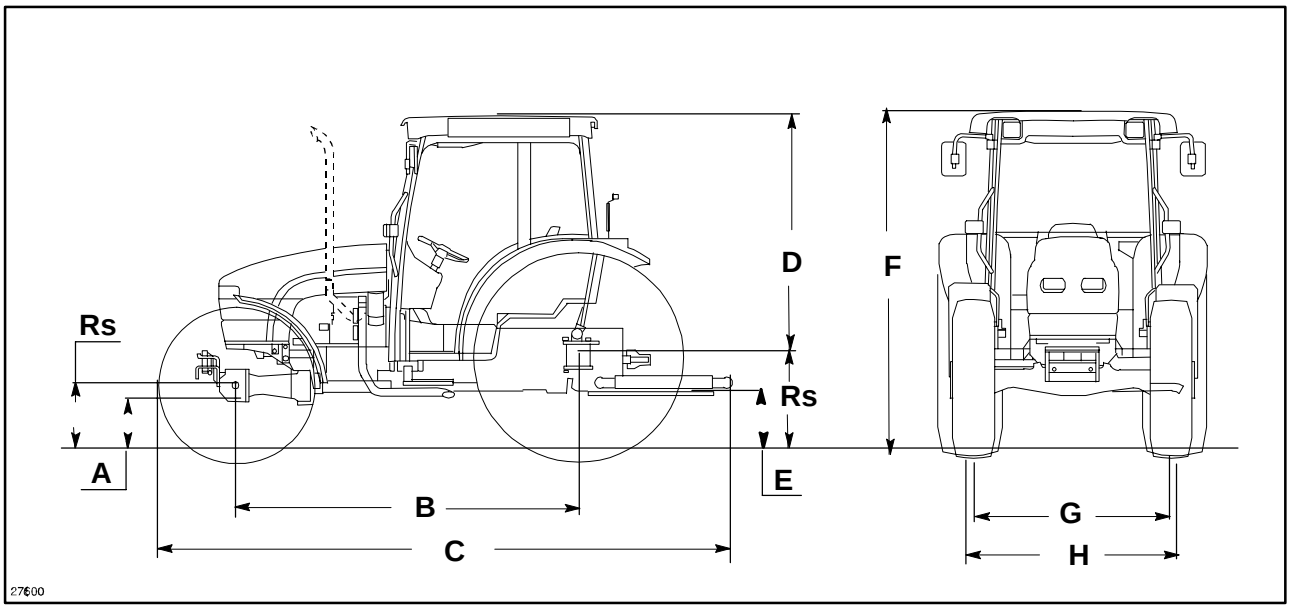

6

Dimensions mm (inches)	TN55S	TN65S	TN70S	TN75S
Rs	Tyre radius under load			
A	330 (12.99)			
B	2375 (93.50)			
C	3750 (147.63)			
D	1672 (65.82)			
E	334 (13.14)			
F	2302 (90.62)			
G	1382 ÷ 1812 (54.40 to 71.33)			
H	1333 ÷ 1920 (52.48 to 75.59)			

BALLAST

MODELS	FRONT SUPPORT	FRONT PLATE	REAR RINGS
TN55D TN65D TN70D TN75D	60 (132)	4/6 x 40 (4/6 x 88)	4/6 x 50 (4/6 x 110)
TN55S TN65S TN70S TN75S	25 (55)	4/6 x 40 (4/6 x 88)	4/6 x 50 (4/6 x 110)

WEIGHTS OF TRACTORS WITH ROLL BARS

TN55D		TN65D		TN70D TN75D	
2WD	4WD	2WD	4WD	2WD	4WD
Without ballast kg (lbs.):					
2250 (4960)	2350 (5180)	2350 (5180)	2450 (5401)	2400 (5291)	2600 (5731)
Fully ballasted kg (lbs.):					
2850 (6283)	2950 (6504)	2950 (6504)	3050 (6724)	3000 (6614)	3200 (7055)

TN55S	TN65S	TN70S TN75S
4WD	4WD	4WD
Without ballast kg (lbs.):		
2550 (5621)	2650 (5842)	2850 (6283)
Fully ballasted kg (lbs.):		
3115 (6867)	3215 (7088)	3415 (7529)

TRACTOR WEIGHTS WITH CAB

TN55D		TN65D		TN70D TN75D	
2WD	FWD	2WD	4WD	2WD	4WD
Without ballast kg (lbs.):					
2450 (5401)	2550 (5621)	2550 (5621)	2650 (5842)	2650 (5842)	2850 (6283)
Fully ballasted kg (lbs.):					
3050 (6724)	3150 (6944)	3150 (6944)	3250 (71650)	3250 (7165)	3450 (7606)

TN55S	TN65S	TN70S TN75S
4WD	4WD	4WD
Without ballast kg (lbs.):		
2750 (6062)	2850 (6283)	3050 (6724)
Fully ballasted kg (lbs.):		
3315 (7308)	3415 (7529)	3615 (7970)

ENGINE

Model	TN55D/S	TN65D/S	TN70D/S	TN75/S
Engine type . . . . . with clutch: −11"	IVECO			
	8035.05B	8035.05R	8035.25R	8035.25
Injection pump	BOSCH			
4−stroke diesel direct injection:				
− naturally aspirated . . .	SI	SI	NO	NO
− turbo−charged	−	−	SI	SI
Number of cylinders	3			
Bore and stroke . . . . mm	104 X 115			
Total displacement . . cm^3	2930			
Compression ratio	17 : 1		16,5 : 1	
Engine max. power DGM/ DIN: . . . . . kW . . . . . Hp	37 50	44 60	48 65	53 72
Torque increase (%)	29	20	28	36
Corresponding . . . . . rpm	2300			
Maximum torque . . . . . rpm	1400			

TIMING

With overhead valves	Timing data
Inlet:	
− start before TDC	12°
− end after BDC	31°
Exhaust:	
− start before BDC	50°
− end after TDC	16°
Valve clearance, timing inspection: . . . . . inch. (mm)	0.017 (0.45)
valve clearance, engine cold:	
− inlet and exhaust . . . . . inch. (mm)	0.012 ± 0.0019 (0.30 ± 0.05)

FUEL SYSTEM

Double−diaphragm fuel pump on injection pump supply line.

Rotary injection pump with centrifugal speed governor,
operating at all speeds and incorporating automatic advance . . . . . type BOSCH−VE4

Fuel filtration:

- mesh filter in the fuel pump;
- replaceable cartridge filter on the injection pump feed line with water separator. Fuel sedimeter filter (optional).

Double cartridge dry air filter, with centrifugal pre−filter and automatic dust extractor.

Injection pump setting on engine:	**TN55D/S**	**TN65D/S**	**TN65D/S TN75D/S**
Before TDC of cylinder No. 1 during compression stroke	9° ± 0.5°		6° ± 0.5°

Injectors	**TN55D/S**	**TN65D/S**	**TN65D/S − TN75D/S**
− order of injection:	1 − 2 − 3		
− number of injection nozzles:	5		
− calibration: . . . . . psi (bar)	3771 to 3858 (260 ÷ 272)		

LUBRICATION

Pressurised, by gear pump.
Oil filtration: pressurised through pump intake mesh and replaceable cartridge filter on engine intake.
Engine lubrication pressure:

- engine speed 2300 rpm . . . . . psi (bar) . . . 41.24 to 55.47 (2.9 ÷ 3.9)

Engine oil cooled by a heat exchanger using engine coolant.

COOLING

Water, pressurised circulation by centrifugal pump.

Radiator with 3 lines of vertical copper pipes for TN55D, TN65D models and 4 lines of vertical copper pipes for TN65D TN75D T models.

Cooling fan fitted on same shaft as water pump.

Water circulation from engine to radiator thermostatically controlled.

TRANSMISSION

Clutch

Dry 11” double−plate, with separate controls: pedal operation for gearbox and hand lever for power take−off.
Disk material:

Mechanical transmission:

- model TN55D/S and TN65D/S: . . . . . organic (standard);
- models TN70D/S and TN75D/S . . . . . cerametallic (standard);
- Electro−hydraulic transmission for (all models): . . . . . organic;
- power take−off clutch for (all models): . . . . . cerametallic.

Gears

Permanently engaged helical mesh with 4 gear ratios.

Full syncromesh.

Range gear:

- cascade connection with 4 gear ranges and synchronised mechanical shuttle. Total of 16 forward and 16 reverse gears.
- cascade connection with 4 gear ranges, Power−Shuttle/HI−LO and electro−hydraulic shuttle. Total of 16 forward and 16 reverse gears.

Rear transmission.

Bevel gear pair ratios:

Version	18.64 mph (30 km/h)	24.85 mph (40 km/h)
TN55D/S	9/38	11/36
TN65D/S, TN70D/S, TN75D/S	9/40	11/39

Differential with pedal−operated, mechanically controlled or electro−hydraulically controlled locking device with automatic release. Epicyclic final drives.

REAR PTO

Fully independent, in three versions: 540 rpm, 540/(540E/750)/1000 rpm and 540/(540E/750) rpm.

Synchronised with gearbox.

Manual control: clutch control lever, take−off engage lever and speed selector lever. Direction of rotation with tractor seen from behind: clockwise.

PTO rpm	Engine rpm		Engine rpm	PTO rpm
540	1957		2300	634
540E	1535			809
750	2132			809
1000	2125			1082

FRONT PTO

Manual: with control knob for electromagnetic clutch. Direction of rotation with tractor seen from the front: counter−clockwise.

− engine at 1100 rpm = PTO 540 rpm

ELECTRO−HYDRAULICALLY OPERATED FRONT HYDRAULIC LIFT

Maximum lift capacity

With third point connected to top hole of top link attachment bracket and for the entire lifting stroke:

− at horizontal arm link ends:
  with arms fully extended . . . . . 2711.68 lbs. (kg 1230)
  with arms fully withdrawn . . . . . 3152.61 lbs. (kg 1430)

− with centre of gravity at 24.01 inch. (610 mm) from link ends:
  with arms fully extended . . . . . 2932.14 lbs. (kg 1330)
  with arms fully withdrawn . . . . . 3373.07 lbs. (kg 1530)

MECHANICALLY AND ELECTRONICALLY CONTROLLED REAR HYDRAULIC LIFT

Operates in the following modes:

- draft control;
- position control;
- mixed position and draft control;
- float mode.

Draft control is through the link arms by means of a torsion bar.

The link−arms are raised and lowered using a button−operated device (Lift−O−Matic).

Oil supply is from the transmission by gear pump operated directly by the engine:

- NEW HOLLAND, type . . . . . C 42
- BOSCH, type 25
- pump speed with engine at maximum power: . . . . . rpm 2484
- corresponding nominal capacity:
- C 42 pump (standard for all models) . . . . . l/min 47.4
- BOSCH 25 pump (optional) . . . . . l/min 63.8
- pressure relief valve setting: . . . . . psi 2184 (190 bar)

Maximum lift capacity

- at link ends of horizontal lines . . . . . 5886 Ibs. (kg 2670)

With third point connected to top hole of top link attachment bracket and for the entire lifting stroke:

- with centre of gravity at 24.01 inch. (610 mm) from link ends . . . . . 5258 Ibs. (kg 2385)

Three−point linkage.

Three−point linkage device 1st and 2nd categories.

Stabilisers for all models:

− mechanically adjusted telescopic stabilisers (standard).

Link arms with rapid attachment (optional).

Single− or double−acting rear remote control valves: up to three, one with float and automatic release.

FRONT AXLE

Central pivoting, telescopic, inverted “U” structure.

Track adjustment: by extending the axle total: 5 track widths.

2WD FRONT WHEELS

Rims with integral sheet−metal wheel disks.

FRONT WHEELS, 4WD

Wheels in two parts: sheet−metal wheel disk and tyre rim.
Track adjustment: variable fitting of rims to disks and wheel hubs.

REAR WHEELS

Wheels in two parts: sheet−metal wheel disk and tyre rim.
Track adjustment: variable fitting of rims to disks and wheel hubs.

STEERING

Hydrostatic control, independent circuit.

Paper oil filter with replaceable cartridge.

Gear pump operated directly by the engine, through timing gears:

- type:
  without POWER SHUTTLE . . . . . NEW HOLLAND A 25
  with POWER SHUTTLE . . . . . NEW HOLLAND A 31 XRP2

- pump speed with engine at max. power: . . . . . rpm 2484

- corresponding capacity
  pump A 25 . . . . . l/min 23.8
  pump A 31 XRP2 . . . . . l/min 36.8

- pressure relief valve setting: . . . . . psi 2417 (170 bar)

Minimum turning radius, two−wheel drive models:

- not brake assisted . . . . . 11.81 ft. (m 3.6)
- brake assisted . . . . . 13.12 ft (m 3.2)

4WD FRONT AXLE

Controlled pivoting axle with coaxial transmission shaft on the longitudinal axis of the tractor. Differential with two planetary pinions.
Transmission units with straight gears on gearbox. Epicyclic reduction gears in wheel hubs with braking system (optional).

Bevel gear pair ratios:

Version	18.64 mph (30 km/h)	24.85 mph (40 km/h)
TN55D/S	9/42	11/40
TN65D/S, TN70D/S, TN75D/S	8/30	10/30

Minimum turning radius with drive disengaged TN/D 4WD series models:

- not brake assisted . . . . . 12.46 ft. (m 3.8)
- brake assisted . . . . . 10.82 ft. (m 3.3)

Minimum turning radius with drive automatically engaged TN/D 4WD series models:

- not brake assisted . . . . . 11.15 ft. (m 3.4)
- brake assisted . . . . . 10.49 ft. (m 3.2)

Minimum turning radius with drive permanently engaged TN/D 4WD series models:

- not brake assisted . . . . . 13.12 ft. (m 4.0)
- brake assisted . . . . . 10.17 ft. (m 3.1)

REAR TRANSMISSION SERVICE BRAKES

Oil−immersed disk brakes with coaxial piston, fitted on differential axle shafts.
Hydrostatically operated with independent hydraulic circuits for right and left−hand brakes, operated by separate pedals.
Pedals are connected for simultaneous braking when driving on roads.

FRONT AXLE SERVICE BRAKES

Hydrostatically operated, oil−immersed disk brakes, mounted on final drives.
Operated when brake pedals are connected together.

PARKING BRAKE ON TRANSMISSION

Disk brake, fully independent, mounted beneath gearbox and connected to pinion shaft. Mechanically operated by lever.

BODYWORK AND DRIVING POSITION

− With roll bar

Platform, instrument panel and mudguards form a single, modular structure, suspended on 4 silent blocks.
Pre−galvanised, shaped sheet metal mudguards, height−adjustable.
Mounting structure for roll bar.
Two fuel tanks with single filler cap: one tank located on right−hand side beneath cab and the other located in front of the radiator.
Bonnet opens towards rear and is held open by a rigid supporting rod.

− With cab

Mudguards and cab form a single integrated structure. Two fuel tanks with single filler cap: one tank located on right−hand side beneath cab and the other located in front of the radiator. Bonnet opens towards rear and is held open by a rigid supporting rod.

Seat

Padded, with mechanical suspension, adjustable springing and position.

TOWING DEVICES

− Cross member with attachment holes.

− Rear swinging drawbar.

− Rear height−adjustable rigid hook.

− Front manoeuvring hook.

ELECTRICAL SYSTEM

Voltage . . . . . 12 V

Alternator

Magneti Marelli (tractors without cab) . . . . . 45 A
Magneti Marelli (tractors with cab) . . . . . 65 A
Maximum power with engine at 2300 rpm, approx.:
− standard . . . . . 280 kW
− optional . . . . . 340 kW
Incorporated electronic voltage regulator.

Battery

12 V capacity 88 Ah, sealed, maintenance−free.

Starter motor

Magneti Marelli (electromagnet operated) . . . . . 2.5 kW

Lights

Two asymmetrical front headlamps using 40/45 W bulbs (white or yellow); optional with 55/60 W halogen bulbs.
Two front light clusters including:

- side lights (5 W light bulb) with white transparent cover;
- direction indicator (21 W light bulb) with orange transparent cover.

Two rear light clusters including:

- side lights (5 W light bulb) with red transparent cover;
- direction indicator (21 W light bulb) with orange transparent cover;
- brake light (21 W light bulb) with red transparent cover;
- number plate light.

Red rear reflectors.

Rear work light.

Instruments and accessories

- Multiple function instrument panel (see page 1−5 and 1−6).
- 7−pin 8 A DIN power socket.
- 25 A power socket.
- Thermostart.
- Flasher for hazard lights on tractor and trailer.

INSPECTIONS AND/OR OPERATIONS TO BE CARRIED OUT

NON−FUNCTIONAL INSPECTIONS/OPERATIONS

1. Tyre pressures and conditions . . . . . ☐
2. Air filter cartridge and hoses . . . . . ☐
3. Cooling system hoses . . . . . ☐
4. Specific gravity and level of coolant
   (specific weight 1.071 ÷ 1.083 at 16 °C) . . . . . ☐
5. Replace fuel filter, clean sedimenter
   and purge air from fuel system . . . . . ☐
6. Drive belts for cooling fan, alternator
   and compressor . . . . . ☐
7. Change engine oil and filter . . . . . ☐
8. Change hydraulic oil and filter . . . . . ☐
9. Check oil level in transmission housing . . . . . ☐
10. Top up lubrication nipples and lubricate joints . . . ☐
11. Tighten wheel disk nuts . . . . . ☐
12. Tighten wheel rim nuts . . . . . ☐
13. Tighten bolts on front ballast . . . . . ☐
14. Front wheel toe−in and steering stops . . . . . ☐
15. Battery leads and fittings . . . . . ☐
16. Windshield wiper/washer bottle level . . . . . ☐
17. Clean cab air filter . . . . . ☐
18. Exhaust pipe mounting 40 Nm (4.1 kgm) . . . . . ☐

OPERATIONAL INSPECTIONS

1. Lights and control instruments . . . . . ☐
2. Oil and fluid leaks . . . . . ☐
3. Maximum and minimum idling speeds
   and engine cut−off . . . . . ☐
4. PTO and brakes . . . . . ☐
5. Hydraulic system
   Draft control operation . . . . . ☐
   Position control operation . . . . . ☐
   Auxiliary control valves . . . . . ☐
   Auxiliary control valves delivery check . . . . . ☐
   System pressure . . . . . ☐

FUNCTIONAL INSPECTIONS

1. Engine, accelerator and speed governor . . . . . ☐
2. Gearbox . . . . . ☐
3. Correct steering operation . . . . . ☐
4. Differential lock and 4WD engage/ disengage . . ☐
5. Brake operation . . . . . ☐
6. Optional equipment and accessories . . . . . ☐
7. Electronic lift control unit operation . . . . . ☐

INSPECTIONS OF SAFETY EQUIPMENT

1. Safety belts (optional) . . . . . ☐
2. Cab mounting nuts/bolts torque . . . . . ☐
3. PTO electrical safety devices engaged . . . . . ☐
4. Handbrake operation and adjustment . . . . . ☐
5. Safety guards and covers . . . . . ☐

Inspections and operations carried out

Tractor model . . . . . **Frame No.:** . . . . . .

Customer's signature **Date** **Dealer's signature** **Date**

INSPECTIONS AND/OR OPERATIONS TO BE CARRIED OUT

NON−FUNCTIONAL INSPECTIONS/OPERATIONS

1. Tyre pressures and conditions . . . . . ☐
2. Air filter cartridge and hoses . . . . . ☐
3. Cooling system hoses . . . . . ☐
4. Specific gravity and level of coolant
   (specific weight 1.071÷1.083 at 16 °C) . . . . . ☐
5. Replace fuel filter, clean sedimenter
   and purge air from fuel system . . . . . ☐
6. Drive belts for cooling fan, alternator
   and compressor . . . . . ☐
7. Change engine oil and filter . . . . . ☐
8. Change hydraulic oil and filter . . . . . ☐
9. Check oil level in transmission housing . . . . . ☐
10. Top up lubrication nipples and lubricate joints . . . ☐
11. Tighten wheel disk nuts . . . . . ☐
12. Tighten wheel rim nuts . . . . . ☐
13. Tighten bolts on front ballast . . . . . ☐
14. Front wheel toe−in and steering stops . . . . . ☐
15. Battery leads and fittings . . . . . ☐
16. Windshield wiper/washer bottle level . . . . . ☐
17. Clean cab air filter . . . . . ☐
18. Exhaust pipe mounting 40 Nm (4.1 kgm) . . . . . ☐

OPERATIONAL INSPECTIONS

1. Lights and control instruments . . . . . ☐
2. Oil and fluid leaks . . . . . ☐
3. Maximum and minimum idling speeds
   and engine cut−off . . . . . ☐
4. PTO and brakes . . . . . ☐
5. Hydraulic system
   Draft control operation . . . . . ☐
   Position control operation . . . . . ☐
   Auxiliary control valves . . . . . ☐
   Auxiliary control valves delivery check . . . . . ☐
   System pressure . . . . . ☐

FUNCTIONAL INSPECTIONS

1. Engine, accelerator and speed governor . . . . . ☐
2. Gearbox . . . . . ☐
3. Correct steering operation . . . . . ☐
4. Differential lock and 4WD engage/ disengage . . ☐
5. Brake operation . . . . . ☐
6. Optional equipment and accessories . . . . . ☐
7. Electronic lift control unit operation . . . . . ☐

INSPECTIONS OF SAFETY EQUIPMENT

1. Safety belts (optional) . . . . . ☐
2. Cab mounting nuts/bolts torque . . . . . ☐
3. PTO electrical safety devices engaged . . . . . ☐
4. Handbrake operation and adjustment . . . . . ☐
5. Safety guards and covers . . . . . ☐

Inspections and operations carried out

Tractor model . . . . . **Frame No.:** . . . . . .

Customer's signature **Date** **Dealer's signature** **Date**

INDEX

CNH ITALIA S.p.A. − Viale delle Nazioni, 55 − 41100 MODENA − Italy

PRODUCT SUPPORT − Technical Information
Print No. **603.64.611.00** − 3rd Edition − 05 − 2003 − 200

PRINTED IN ITALY

NEW HOLLAND constantly improves its product range and, therefore, reserve the right to modify products whenever necessary, without any obligation to apply these improvements and modifications to vehicles that were previously sold.

All information included in this manual is subject to eventual product variations. Dimensions and weights are provided with approximate values and the tractor fittings shown in the illustrations may not correspond with standard models. Precise data and information on models and fittings are available at your NEW HOLLAND dealer.

NEW HOLLAND

Part No. 603.64.611.00
English 05/03