# WSM

## WORKSHOP MANUAL
# ZERO TURN MOWER

# ZD18(F),ZD21(F),
# ZD25F,ZD28(F)

Kubota

KiSC issued 04, 2009 A

# TO THE READER

This Workshop Manual has been prepared to provide servicing personnel with information on the mechanism, service and maintenance of ZD18(F), ZD21(F) and ZD28(F) KUBOTA ZD Series ZERO-TURN MOWER. It is divided into two parts, “Mechanism” and “Servicing” for each section.

■ **Mechanism**

Information on the Features and New Mechanisms are described. This information should be understood before proceeding with troubleshooting, disassembling and servicing.

■ **Servicing**

The heading “General” includes general precautions, check and maintenance and special tools. Other section, there are troubleshooting, checking and adjusting, disassembling and assembling, and servicing which cover procedures, precautions, factory specifications and allowable limits.

All information illustrations and specifications contained in this manual are based on the latest product information available at the time of publication. The right is reserved to make changes in all information at any time without notice.

**March 2002**

# SAFETY FIRST

**This symbol, the industry's "Safety Alert Symbol", is used throughout this manual and on labels on the machine itself to warn of the possibility of personal injury. Read these instructions carefully.**

**It is essential that you read the instructions and safety regulations before you attempt to repair or use this unit.**

**DANGER** : **Indicates an imminently hazardous situation which, if not avoided, will result in death or serious injury.**

**WARNING** : **Indicates a potentially hazardous situation which, if not avoided, could result in death or serious injury.**

**CAUTION** : **Indicates a potentially hazardous situation which, if not avoided, may result in minor or moderate injury.**

■ **IMPORTANT** : **Indicates that equipment or property damage could result if instructions are not followed.**

■ **NOTE** : **Gives helpful information.**

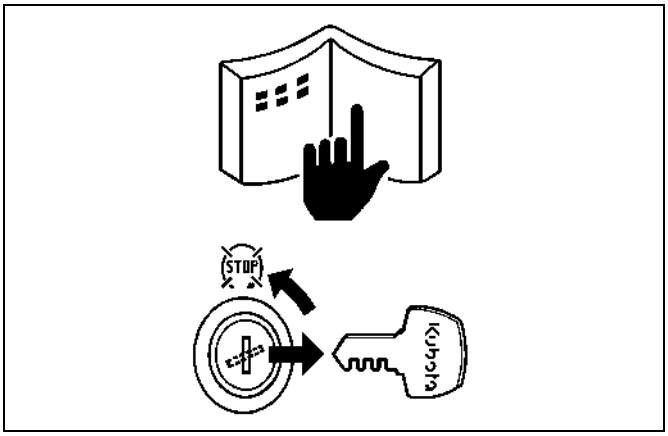


## BEFORE SERVICING AND REPAIRING

- Read all instructions and safety instructions in this manual and on your generator safety decals.
- Clean the work area and generator.
- Park the machine on a firm and level ground, and set the parking brake.
- Lower the implement to the ground.
- Stop the engine, and remove the key.
- Disconnect the battery negative cable.
- Hang a "**DO NOT OPERATE**" tag in operator station.

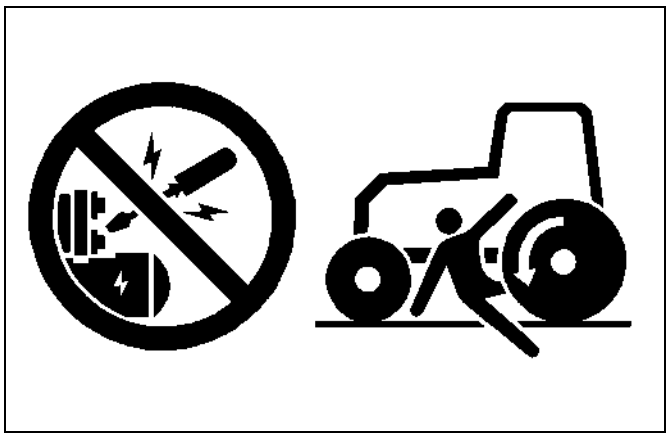

## SAFETY STARTING

- Do not start the engine by shorting across starter terminals or bypassing the safety start switch.
- Do not alter or remove any part of machine safety system.
- Before starting the engine, make sure that all shift levers are in neutral positions or in disengaged positions.
- Never start the engine while standing on ground. Start the engine only from operator's seat.

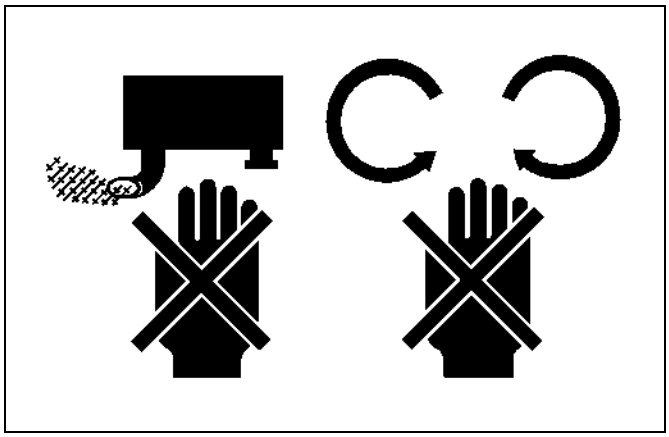

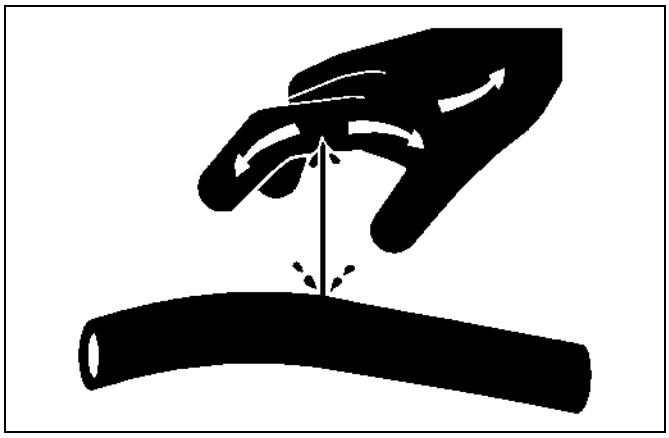

## SAFETY WORKING

- Do not work on the machine while under the influence of alcohol, medication, or other substances or while fatigued.
- Wear close fitting clothing and safety equipment appropriate to the job.
- Use tools appropriate to the work. Makeshift tools, parts, and procedures are not recommended.
- When servicing is performed together by two or more persons, take care to perform all work safely.
- Do not work under the machine that is supported solely by a jack. Always support the machine by safety stands.
- Do not touch the rotating or hot parts while the engine is running.
- Never remove the radiator cap while the engine is running, or immediately after stopping. Otherwise, hot water will spout out from radiator. Only remove radiator cap when cool enough to touch with bare hands. Slowly loosen the cap to first stop to relieve pressure before removing completely.
- Escaping fluid (fuel or hydraulic oil) under pressure can penetrate the skin causing serious injury. Relieve pressure before disconnecting hydraulic or fuel lines. Tighten all connections before applying pressure.

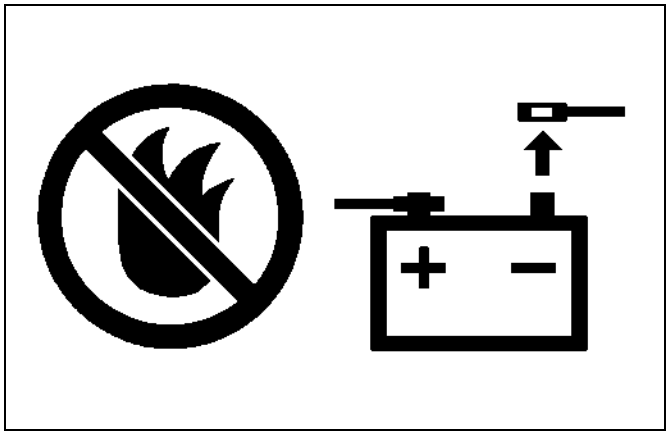

## AVOID FIRES

- Fuel is extremely flammable and explosive under certain conditions. Do not smoke or allow flames or sparks in your working area.
- To avoid sparks from an accidental short circuit, always disconnect the battery negative cable first and connect it last.
- Battery gas can explode. Keep sparks and open flame away from the top of battery, especially when charging the battery.
- Mark sure that no fuel has been spilled on the engine.

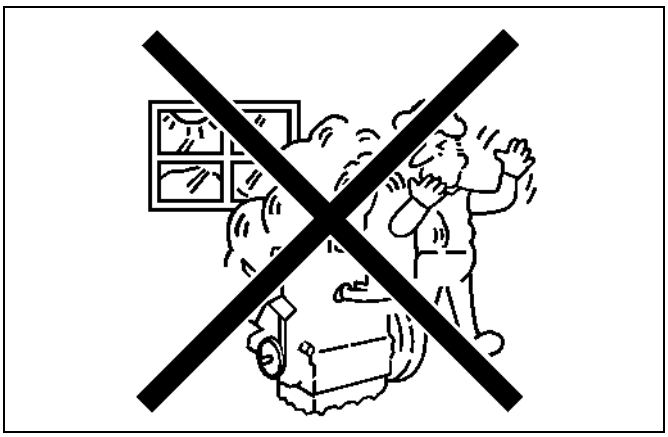

## VENTILATE WORK AREA

- If the engine must be running to do some work, make sure the area is well ventilated. Never run the engine in a closed area. The exhaust gas contains poisonous carbon monoxide.

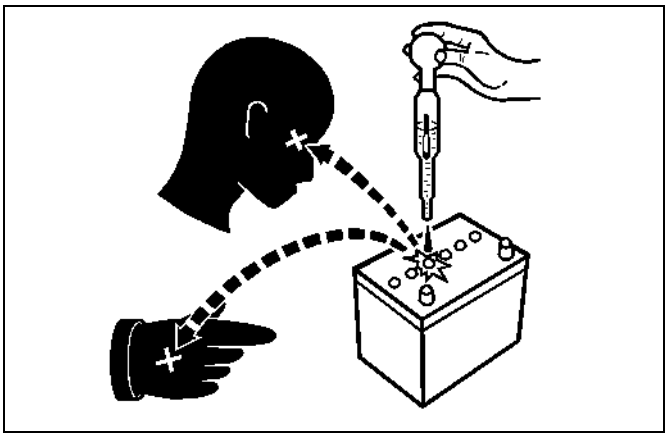

## PREVENT ACID BURNS

- Sulfuric acid in battery electrolyte is poisonous. It is strong enough to burn skin, clothing and cause blindness if splashed into eyes. Keep electrolyte away from eyes, hands and clothing. If you spill electrolyte on yourself, flush with water, and get medical attention immediately.

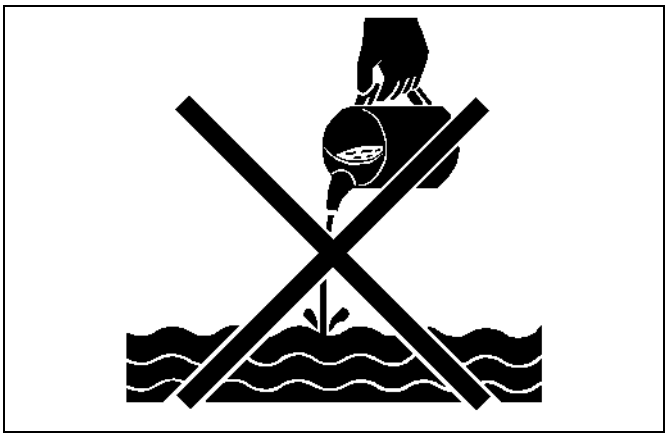

## DISPOSE OF FLUIDS PROPERLY

- Do not pour fluids into the ground, down a drain, or into a stream, pond, or lake. Observe relevant environmental protection regulations when disposing of oil, fuel, coolant, electrolyte and other harmful waste.

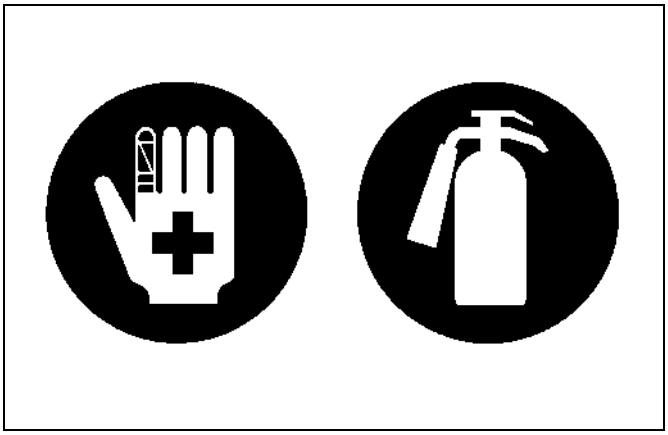

## PREPARE FOR EMERGENCIES

- Keep a first aid kit and fire extinguisher handy at all times.
- Keep emergency numbers for doctors, ambulance service, hospital and fire department near your telephone.

# SAFETY DECALS

· **The following safety decals are installed on the machine.**
**If a decal becomes damaged, illegible or is not on the machine, replace it. The decal part number is listed in the parts list.**

**[ZD18 · ZD21 · ZD28]**

## 7. DANGER, WARNING AND CAUTION LABELS

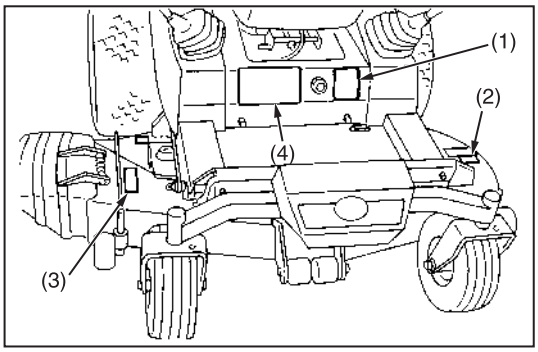


(1) Part No. K3111-8817-3


(2) Part No. K5112-7312-2


(3) Part No. K5112-7311-2


(4) Part No. K3151-6581-1


T15061ZZ00301

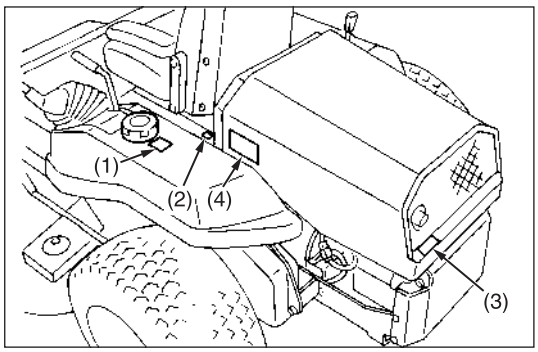


(1) Part No. K3111-6585-1


(2) Part No. K3111-6591-1

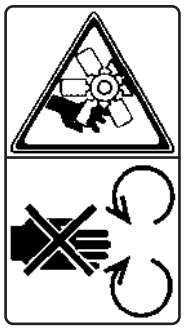

(3) Part No. 18620-8806-1


(4) Part No. K3111-6583-1


T15060ZZ00201

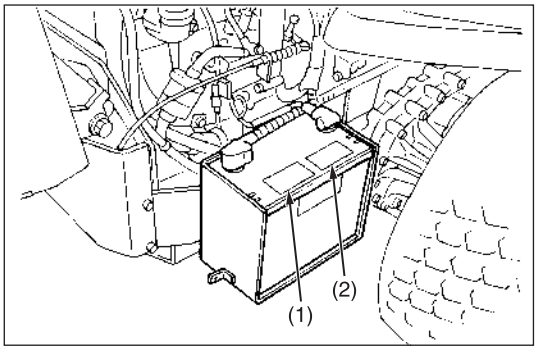


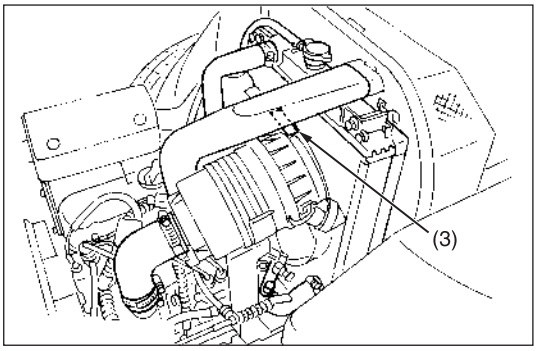


(1) Part No. K1211-6115-1

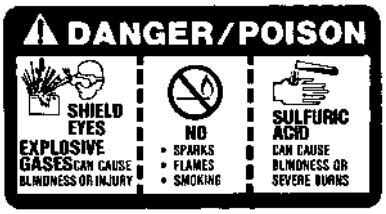


(2) Part No. K1211-6116-1

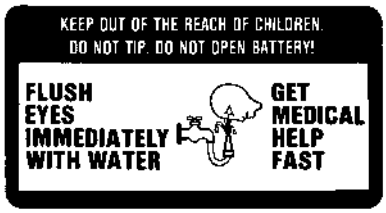


(3) Part No. K3111-6586-1
Stay clear of engine fan and fan belt.

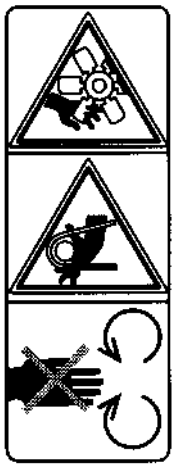

**CARE OF DANGER, WARNING AND CAUTION LABELS**

1. Keep danger, warning and caution labels clean and free from obstructing material.
2. Clean danger, warning and caution labels with soap and water, and dry with a soft cloth.
3. Replace damaged or missing danger, warning and caution labels with new labels.
4. If a component with danger, warning or caution label(s) affixed is replaced with new part, make sure new label(s) is(are) attached in the same location(s) as the replaced component.
5. Mount new danger, warning and caution labels by applying on a clean dry surface and pressing any bubbles to outside edge.

T15060ZZ00301

**[ZD18F · ZD21F · ZD28F]**

## 7. DANGER, WARNING AND CAUTION LABELS

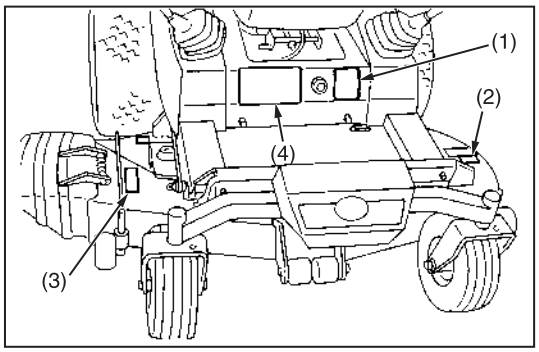


(1) Part No. K3111-8817-3


(2) Part No. K5112-7312-2


(3) Part No. K5112-7311-2


(4) Part No. K3151-6581-1


T15061ZZ00301

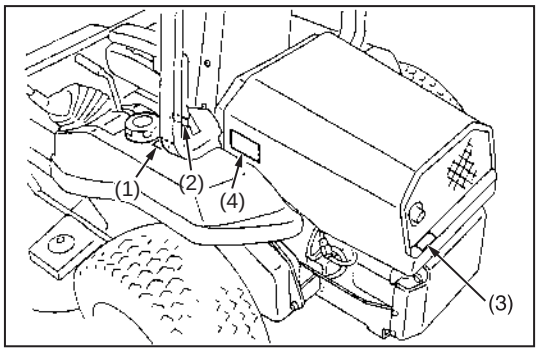


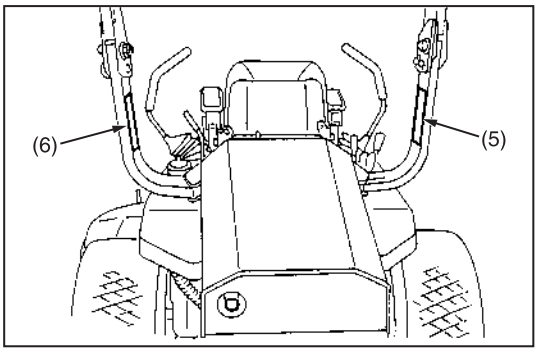


(1) Part No. K3111-6585-1

Diesel fuel only

No fire


(2) Part No. K3111-6591-1

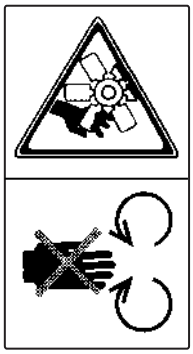

(3) Part No. 18620-8806-1


(5) Part No. K2591-6564-1

**WARNING**

Never modify or repair a ROPS because welding, grinding, drilling or cutting any portion may weaken the structure.

**CAUTION**

**TO AVOID INJURY WHEN RAISING OR FOLDING ROPS:**

- Set parking brake and stop engine.
- Remove any obstruction that may prevent raising or folding of the ROPS.
- Do not allow any bystanders.
- Always perform function from a stable position at the rear of the tractor.
- Hold the top of the ROPS securely when raising or folding.
- Make sure all pins are installed and locked.

(6) Part No. K2591-6557-1

**WARNING**

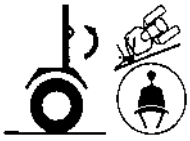

**TO AVOID PERSONAL INJURY OR DEATH FROM ROLL-OVEWR**

1. Keep Roll- Over Protective Structures (ROPS) in the upright and locked position.
2. Fasten SEAT BELT before operating.

**THERE IS NO OPERATOR PROTECTION WHEN THE ROPS IN IN THE FOLDED POSITION.**

1. Check the operating area and fold the ROPS only when absolutely necessary.
2. Do not wear SEAT BELT if ROPS in folded:
3. Raise and lock ROPS as soon as vertical clearance allows.
4. Read ROPS related instruction and warnings.

(4) Part No. K3151-6583-1


T15061ZZ00401

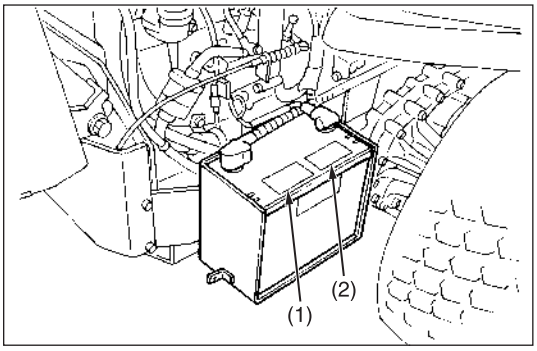


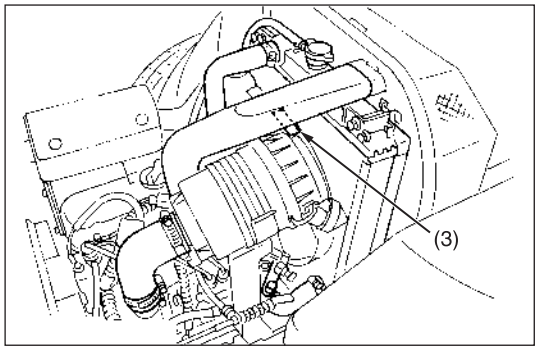


(1) Part No. K1211-6115-1

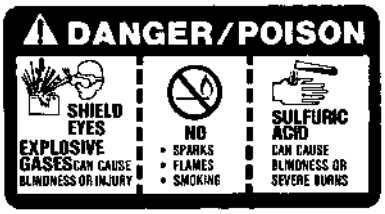


(2) Part No. K1211-6116-1

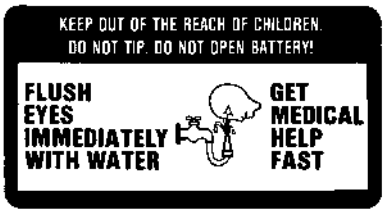


(3) Part No. K3111-6586-1
Stay clear of engine fan and fan belt.

**CARE OF DANGER, WARNING AND CAUTION LABELS**

1. Keep danger, warning and caution labels clean and free from obstructing material.
2. Clean danger, warning and caution labels with soap and water, and dry with a soft cloth.
3. Replace damaged or missing danger, warning and caution labels with new labels.
4. If a component with danger, warning or caution label(s) affixed is replaced with new part, make sure new label(s) is(are) attached in the same location(s) as the replaced component.
5. Mount new danger, warning and caution labels by applying on a clean dry surface and pressing any bubbles to outside edge.

T15060ZZ00301

# SPECIFICATIONS

| Model | | ZD18 | ZD21 | ZD28 |
|---|---|---|---|---|
| Maximum gross power | | 13.4 kW (18 HP)*1 | 15.7 kW (21 HP)*1 | 20.9 kW (28 HP)*1 |
| Engine | Model | D722-E-XFM5 | D782-E-XFM5 | D1105-E-ZD |
| | Type | Indirect injection, vertical, water cooled, 4-cycle diesel engine | | |
| | Number of cylinders | 3 | | |
| | Bore and stroke | 67.0 × 68.0 mm (2.64 × 2.68 in.) | 67.0 × 73.6 mm (2.64 × 2.90 in.) | 78.0 × 78.4 mm (3.07 × 3.09 in.) |
| | Total displacement | 719 $cm^3$ (43.9 cu.in.) | 778 $cm^3$ (47.5 cu.in.) | 1123 $cm^3$ (68.5 cu.in.) |
| | Rated revolution | 3200 rpm | | 3000 rpm |
| | Combustion chamber | Spherical type (E-TVCS) | | |
| | Fuel injection pump | Bosch MD type mini pump | | |
| | Governor | Centrifugal ball mechanical governor | | |
| | Injection nozzle | Bosch throttle type | | Throttle type |
| | Injection timing | 0.33 to 0.37 rad. (19° to 21°) before T.D.C. | | |
| | Injection order | 1-2-3 | | |
| | Injection pressure | 13.73 MPa (140 $kgf/cm^2$, 1990 psi) | | |
| | Lubricating system | Forced lubrication by gear pump | | |
| | Cooling system | Pressurized radiator, forced circulation with water pump | | |
| | Lubricating oil | API Service classification CC or CD, Below 0 °C (32 °F) : SAE 10W or 10W-30, 0 to 25 °C (32 °F to 77 ° F) : SAE 20 or 10W-30, Above 25 °C (77 °F) : SAE 30 or 10W-30 | | |
| | Starting system | Electric starter (12 V, 1.1 kW) | | |
| | Battery | 51 R (12 V, 450 CCA) | | |
| | Fuel | No. 2-D Diesel fuel (ASTM D975) [No. 1-D diesel fuel, if temperature is below – 10 °C (14 °F)] | | |
| Capacities | Fuel tank | 30 L (5.8 U.S.gals., 4.8 Imp.gals.) | | |
| | Engine crankcase | 3.2 L (3.4 U.S.qts., 2.8 Imp.qts.) | 3.5 L (3.7 U.S.qts., 3.1 Imp.qts.) | 3.4 L (3.6 U.S.qts., 3.0 Imp.qts.) |
| | Engine coolant | 2.6 L (2.7 U.S.qts., 2.3 Imp.qts.) | | 3.8 L (4.0 U.S.qts., 3.3 Imp.qts.) |
| | Recovery tank | 0.25 L (0.26 U.S.qts., 0.22 Imp.qts.) | | |
| | Transmission (Including HST and cylinder) | 4.0 L (4.2 U.S.qts., 3.5 Imp.qts.)*2 | | |
| | Rear axle gear case | 1.8 L (1.9 U.S.qts., 1.6 Imp.qts.)*2 each | | |
| | Mower gear case oil | 0.40 L (0.42 U.S.qts., 0.35 Imp.qts.) | | |
| Tires | Front | 15 × 6.0-6 (4PR) Rib | | |
| | Rear | 23 × 10.5-12 (4PR) Turf | 24 × 12.0-12 (4PR) Turf | |
| Travelling speeds | Forward | 0 to 14.5 km/h (0 to 9.0 mph)*3 | 0 to 15.0 km/h (0 to 9.3 mph)*3 | 0 to 15.0 km/h (0 to 9.3 mph)*4 |
| | Reverse | 0 to 8.0 km/h (0 to 5.0 mph)*3 | 0 to 8.3 km/h (0 to 5.2 mph)*3 | 0 to 8.3 km/h (0 to 5.2 mph)*4 |

**NOTE:** *1 Manufacturer's estimate
*2 Oil amount when the oil level is at the upper level.
*3 At 3200 engine rpm
*4 At 3000 engine rpm

W1028929

| Model | | | ZD18 | ZD21 | ZD28 |
|---|---|---|---|---|---|
| Dimensions | Overall length | | 2040 mm (80.3 in.) | | 2260 mm (90.0 in.) |
| | Overall width (Without mower) | | 1328 mm (52.3 in.) | 1451 mm (57.1 in.) | |
| | Overall height (Without ROPS) | | 1175 mm (46.3 in.) | 1190 mm (46.9 in.) | |
| | Wheel base | | 1250 mm (49.2 in.) | | 1365 mm (53.7 in.) |
| | Treads | Front | 975 mm (38.4 in.) | | 1070 mm (42.1 in.) |
| | | Rear | 1080 mm (42.5 in.) | 1150 mm (45.3 in.) | |
| Weight (With mower deck) | | | 560 kg (1234.6 lbs) / With 54" mower deck | 570 kg (1256.6 lbs) / With 60" mower deck | 650 kg (1433 lbs) / With 60" mower deck, 680 kg (1499 lbs) / With 72" mower deck |

W1033163

| Model | | | ZD18F | ZD21F | ZD28F |
|---|---|---|---|---|---|
| Maximum gross power | | | 13.4 kW (18 HP)*1 | 15.7 kW (21 HP)*1 | 20.9 kW (28 HP)*1 |
| Engine | Model | | D722-E-XFM5 | D782-E-XFM5 | D1105-E-ZD |
| | Type | | Indirect injection, vertical, water cooled, 4-cycle diesel engine | | |
| | Number of cylinders | | 3 | | |
| | Bore and stroke | | 67.0 × 68.0 mm (2.64 × 2.68 in.) | 67.0 × 73.6 mm (2.64 × 2.90 in.) | 78.0 × 78.4 mm (3.07 × 3.09 in.) |
| | Total displacement | | 719 $cm^3$ (43.9 cu.in.) | 778 $cm^3$ (47.5 cu.in.) | 1123 $cm^3$ (68.5 cu.in.) |
| | Rated revolution | | 3200 rpm | | 3000 rpm |
| | Combustion chamber | | Spherical type (E-TVCS) | | |
| | Fuel injection pump | | Bosch MD type mini pump | | |
| | Governor | | Centrifugal ball mechanical governor | | |
| | Injection nozzle | | Bosch throttle type | | Throttle type |
| | Injection timing | | 0.33 to 0.37 rad. (19° to 21°) before T.D.C. | | |
| | Injection order | | 1-2-3 | | |
| | Injection pressure | | 13.73 MPa (140 kgf/$cm^2$, 1990 psi) | | |
| | Lubricating system | | Forced lubrication by gear pump | | |
| | Cooling system | | Pressurized radiator, forced circulation with water pump | | |
| | Lubricating oil | | API Service classification CC or CD, Below 0 °C (32 °F) : SAE 10W or 10W-30, 0 to 25 °C (32 °F to 77 ° F) : SAE 20 or 10W-30, Above 25 °C (77 °F) : SAE 30 or 10W-30 | | |
| | Starting system | | Electric starter (12 V, 1.1 kW) | | |
| | Battery | | 51 R (12 V, 450 CCA) | | |
| | Fuel | | No. 2-D Diesel fuel (ASTM D975) [No. 1-D diesel fuel, if temperature is below – 10 °C (14 °F)] | | |
| Capacities | Fuel tank | | 30 L (5.8 U.S.gals., 4.8 Imp.gals.) | | |
| | Engine crankcase | | 3.2 L (3.4 U.S.qts., 2.8 Imp.qts.) | 3.5 L (3.7 U.S.qts., 3.1 Imp.qts.) | 3.4 L (3.6 U.S.qts., 3.0 Imp.qts.) |
| | Engine coolant | | 2.6 L (2.7 U.S.qts., 2.3 Imp.qts.) | | 3.8 L (4.0 U.S.qts., 3.3 Imp.qts.) |
| | Recovery tank | | 0.25 L (0.26 U.S.qts., 0.22 Imp.qts.) | | |
| | Transmission (Including HST and cylinder) | | 4.0 L (4.2 U.S.qts., 3.5 Imp.qts.)*2 | | |
| | Rear axle gear case | | 1.8 L (1.9 U.S.qts., 1.6 Imp.qts.)*2 each | | |
| | Mower gear case oil | | 0.40 L (0.42 U.S.qts., 0.35 Imp.qts.) | | |
| Tires | Front | | 15 × 6.0-6 (4PR) Rib | | |
| | Rear | | 23 × 10.5-12 (4PR) Turf | 24 × 12.0-12 (4PR) Turf | |
| Travelling speeds | Forward | | 0 to 14.5 km/h (0 to 9.0 mph)*3 | 0 to 15.0 km/h (0 to 9.3 mph)*3 | 0 to 15.0 km/h (0 to 9.3 mph)*4 |
| | Reverse | | 0 to 8.0 km/h (0 to 5.0 mph)*3 | 0 to 8.3 km/h (0 to 5.2 mph)*3 | 0 to 8.3 km/h (0 to 5.2 mph)*4 |
| Dimensions | Overall length | | 2040 mm (80.3 in.) | | 2260 mm (90.0 in.) |
| | Overall width (Without mower) | | 1328 mm (52.3 in.) | 1451 mm (57.1 in.) | |
| | Overall height | With ROPS upright | 1895 mm (74.6 in.) | 1910 mm (75.2 in.) | |
| | | With ROPS folded | 1455 mm (57.3 in.) | 1470 mm (57.9 in.) | |
| | Wheel base | | 1250 mm (49.2 in.) | | 1365 mm (53.7 in.) |
| | Treads | Front | 975 mm (38.4 in.) | | 1070 mm (42.1 in.) |
| | | Rear | 1080 mm (42.5 in.) | 1150 mm (45.3 in.) | |

**NOTE:** *1 Manufacturer's estimate
*2 Oil amount when the oil level is at the upper level.
*3 At 3200 engine rpm
*4 At 3000 engine rpm

| Model | ZD18F | ZD21F | ZD28F |
|---|---|---|---|
| Weight (With mower deck) | 640 kg (1411 lbs) / With 54" mower deck | 650 kg (1433 lbs) / With 60" mower deck | 780 kg (1718 lbs) / With 72" mower deck |
| PTO | Shaft drive KUBOTA 10 tooth in spline (2530 rpm) | | Shaft drive KUBOTA 10 tooth in spline (2540 rpm) |
| PTO clutch | Wet multi discs | | |
| Revolution (PTO speed) | 1 speed (2530 rpm at 3200 engine rpm) | | 1 speed (2540 rpm at 3000 engine rpm) |
| PTO brake | Wet single disc | | |
| Steering | 2-Hand levers | | |
| Transmission | 2-Hydrostatic transmission with gear | | |
| Brake | Internal expanding shoe / Hand | | |

The company reserves the right to change the specifications without notice.

W1030228

| Model | | | RCK54-18Z | RCK60-21Z | RCK60-28Z | RCK72-28Z |
|---|---|---|---|---|---|---|
| Mower | Suitable machine | | ZD18(F) | ZD18(F) / 21(F) | ZD28(F) | |
| | Mounting method | | Quick joint, parallel linkage | | | |
| | Adjustment of cutting height | | Dial gauge | | | |
| | Cutting width mm (in.) | | 1372 (54.0) | 1524 (60.0) | | 1829 (72.0) |
| | Cutting height mm (in.) | | 25 to 127 (1.0 to 5.0) | | | |
| | Weight (Approx.) kg (lbs) | | 103 (227) | 120 (265) | | 150 (331) |
| | Blade spindle speed r/s (rpm) | | 53.2 (3190)*1 | 54.0 (3240)*1 | 53.7 (3220)*1 | 47.8 (2870)*1 |
| | Blade tip velocity m/s (fpm) | | 79 (15700)*1 | 88.9 (17500)*1 | 88.4 (17400)*1 | 94.0 (18500)*1 |
| | Blade length mm (in.) | | 475 (18.7) | 523 (20.6) | | 625 (24.6) |
| | Number of blades | | 3 | | | |
| | Dimensions | Total length mm (in.) | 985 (38.8) | 1025 (40.35) | | 1095 (43.1) |
| | | Total width mm (in.) | 1690 (66.5) | 1845 (72.6) | | 2245 (88.4) |
| | | Total height mm (in.) | 300 (11.8) | | | |
| | Discharge | | Right side | | | |

**NOTE:** *1 Engine Max rpm

The company reserves the right to change the specifications without notice.

W1029898

# DIMENSIONS

## [ZD18 · ZD21 · ZD28]

Unit : mm (in.)

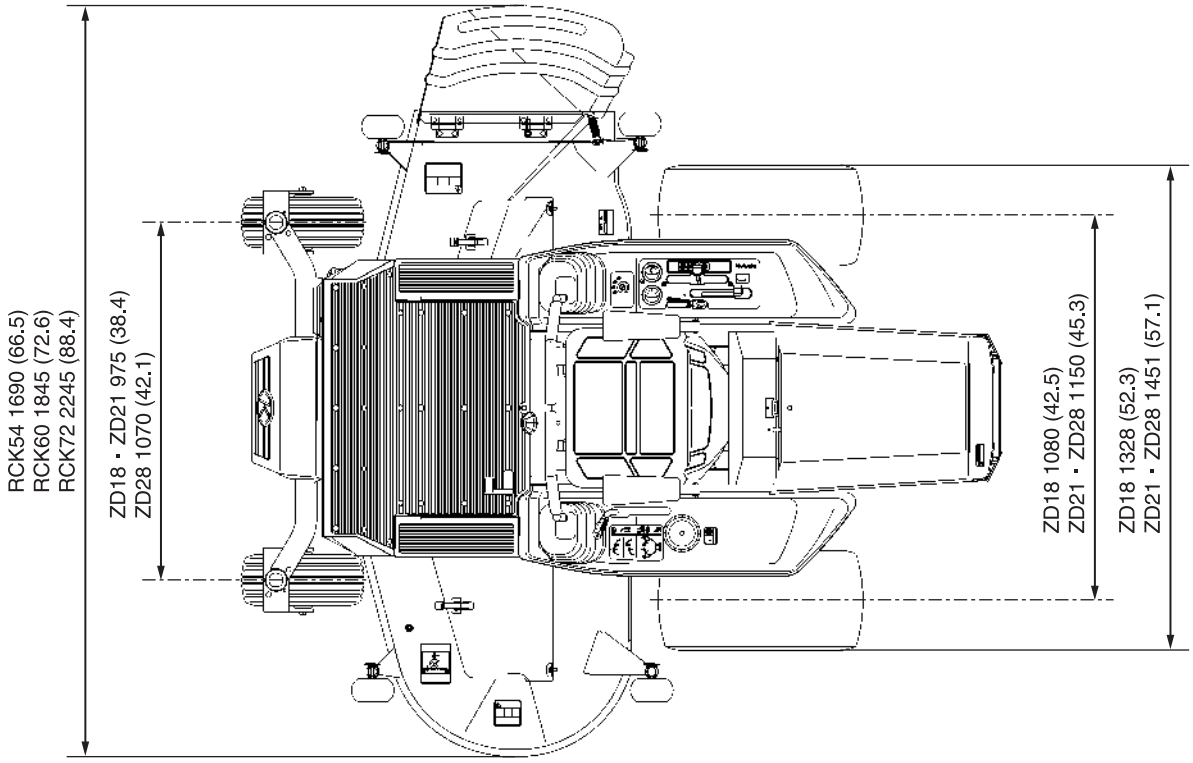


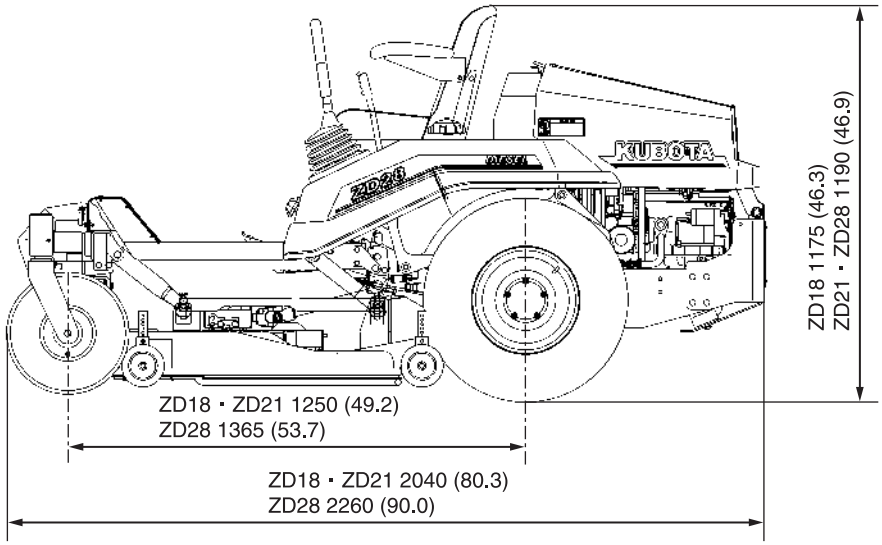


T15061ZZ00101

## [ZD18F · ZD21F · ZD28F]

Unit : mm (in.)

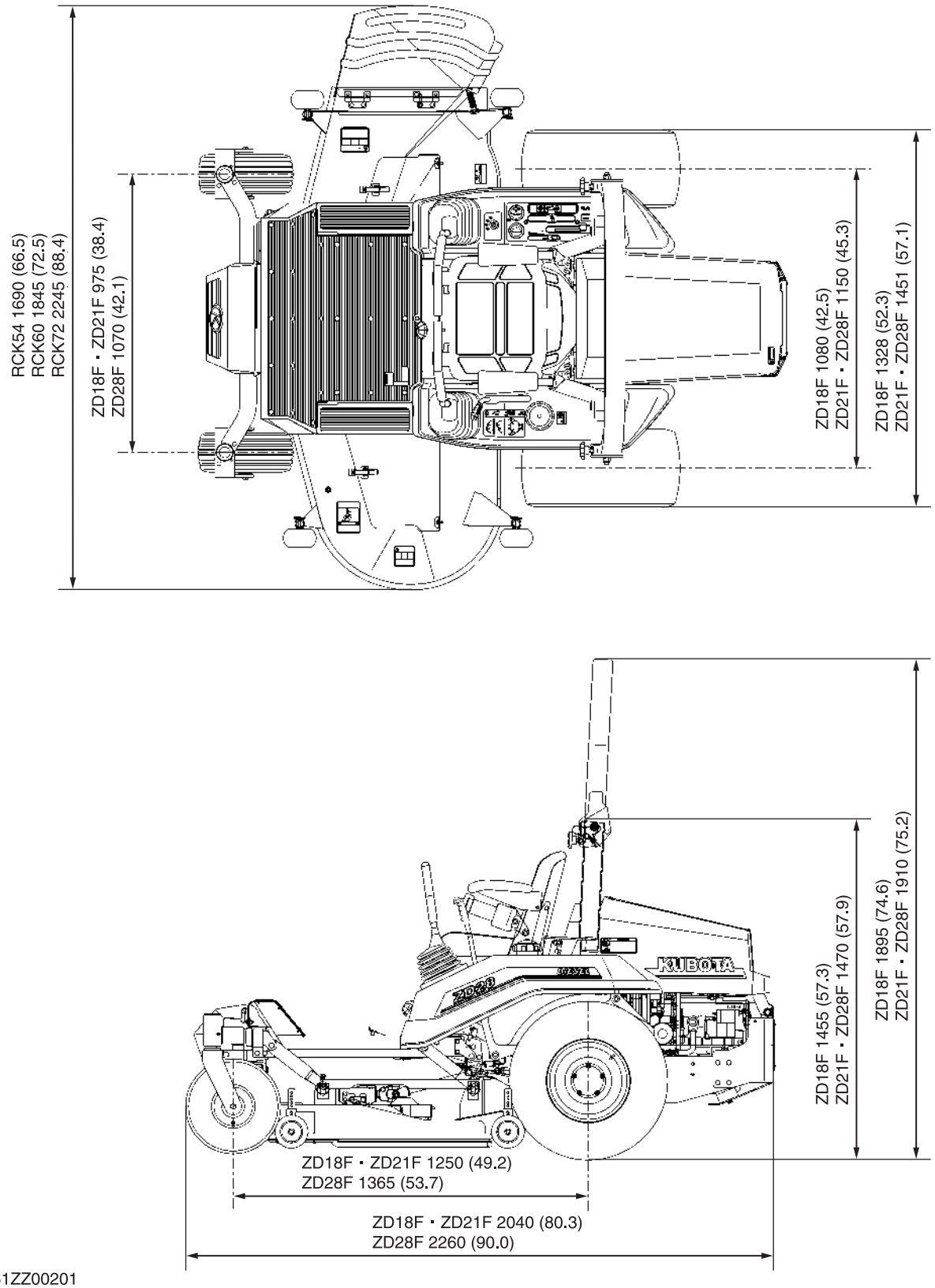


T15061ZZ00201

# G GENERAL

# GENERAL

## CONTENTS

# 1. IDENTIFICATION

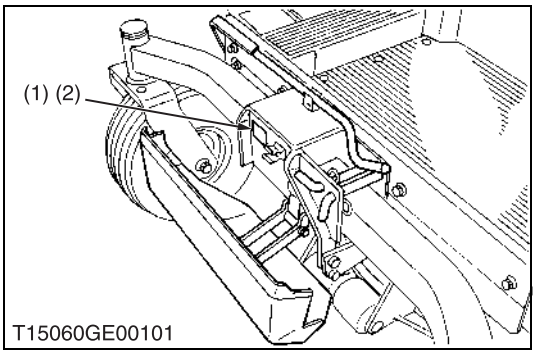


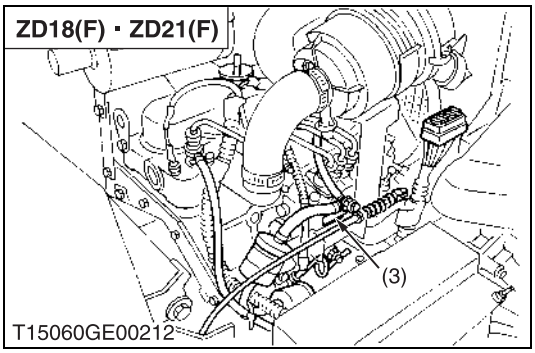


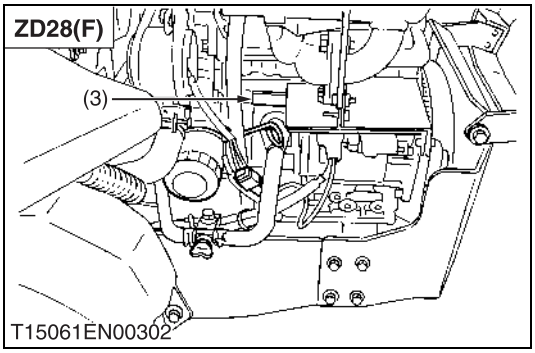


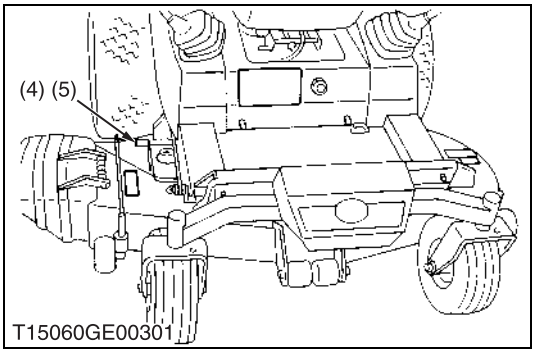


When contacting your local KUBOTA distributor, always specify engine serial number (3), machine serial number (2), mower serial number (4) and hour meter reading.

(1) Machine Identification Plate
(2) Machine Serial Number
(3) Engine Serial Number
(4) Mower Serial Number
(5) Mower Identification Plate

W1010714

# 2. GENERAL PRECAUTIONS

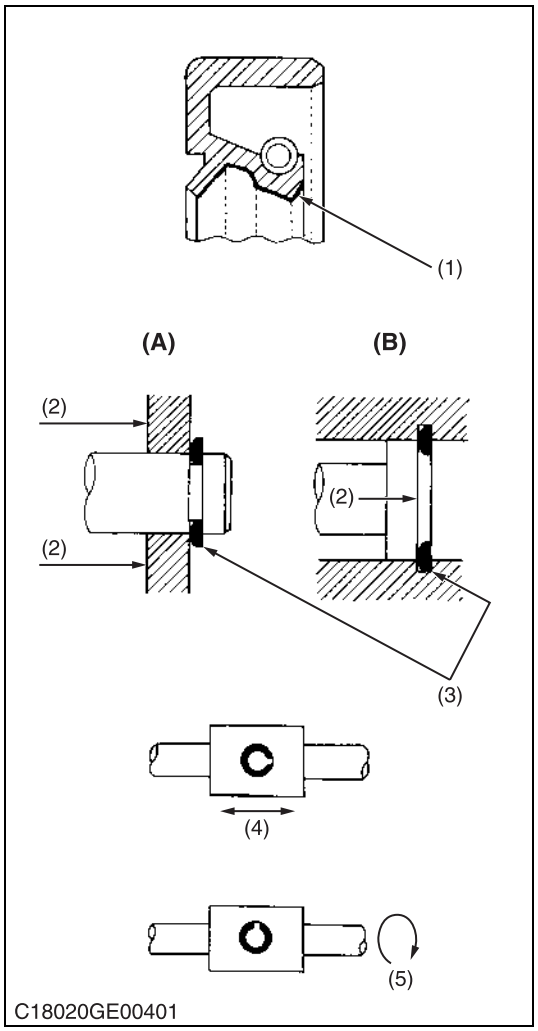


- During disassembly, carefully arrange removed parts in a clean area to prevent confusion later. Screws, bolts and nuts should be installed in their original position to prevent reassembly errors.
- When special tools are required, use KUBOTA genuine special tools. Special tools which are not frequently used should be made according to the drawings provided.
- Before disassembling or servicing electrical wires, always disconnect the ground cable from the battery first.
- Remove oil and dirt from parts before measuring.
- Use only KUBOTA genuine parts for parts replacement to maintain machine performance and to assure safety.
- Gaskets and O-rings must be replaced during reassembly. Apply grease to new O-rings or oil seals before assembling. See the figure left side.
- When reassembling external snap rings or internal snap rings, they must be positioned so that sharp edge faces against the direction from which a force is applied. See the figure left side.
- When inserting spring pins, their splits must face the direction from which a force is applied. See the figure left side.
- To prevent damage to the hydraulic system, use only specified fluid or equivalent.

(1) Grease
(2) Force
(3) Sharp Edge
(4) Axial Force
(5) Rotating Movement

**(A) External Snap Ring**
**(B) Internal Snap Ring**

W1010904

# 3. HANDLING PRECAUTIONS FOR ELECTRICAL PARTS AND WIRING

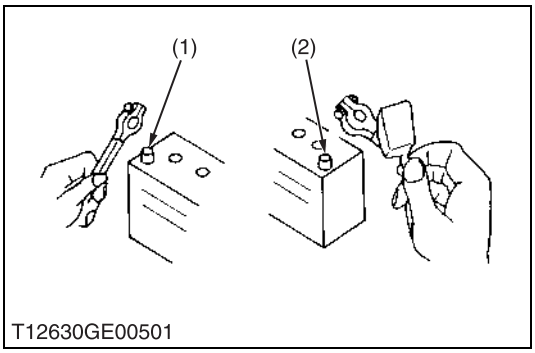


To ensure safety and prevent damage to the machine and surrounding equipment, heed the following precautions in handling electrical parts and wiring.

■ **IMPORTANT**

- **Check electrical wiring for damage and loosened connection every year. To this end, educate the customer to do his or her own check and at the same time recommend the dealer to perform periodic check for a fee.**
- **Do not attempt to modify or remodel any electrical parts and wiring.**
- **When removing the battery cables, disconnect the negative cable first. When installing the battery cables, connect the positive cable first.**

(1) Negative Terminal (2) Positive Terminal

W1011114

## [1] WIRING

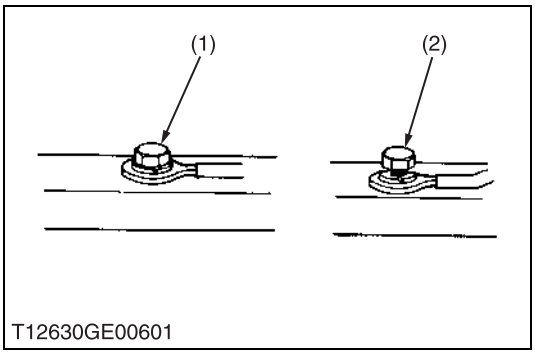


- Securely tighten wiring terminals.

(1) Correct (Securely tighten) (2) Incorrect (Loosening leads to faulty contact)

W1011216

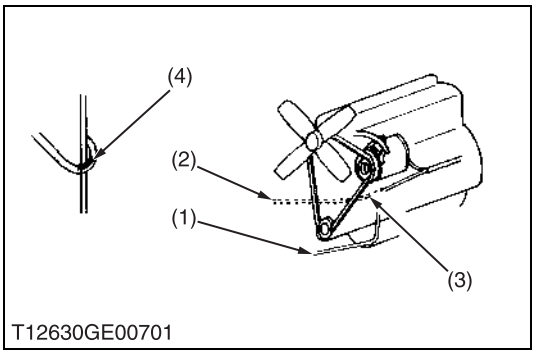


- Do not let wiring contact dangerous part.

(1) Wiring (Correct) (3) Dangerous Part
(2) Wiring (Incorrect) (4) Dangerous Part

W1011313

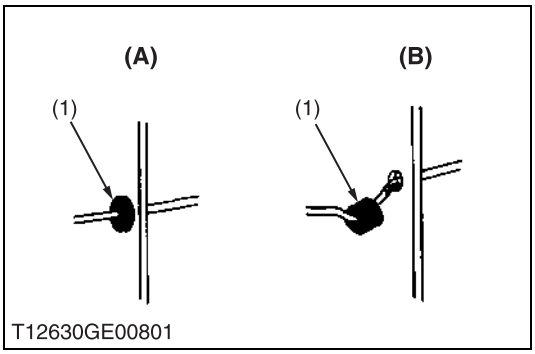


- Securely insert grommet.

(1) Grommet **(A) Correct**
**(B) Incorrect**

W1011388

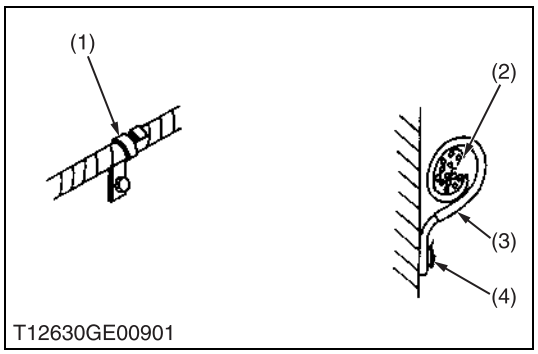


- Securely clamp, being careful not to damage wiring.

(1) Clamp
  • Wind Clamp Spirally
(2) Wire Harness
(3) Clamp
(4) Welding Dent

W1011458

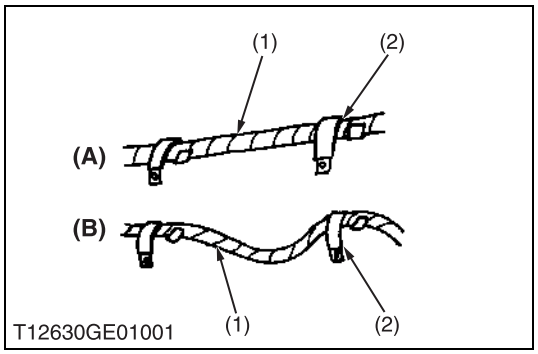


- Clamp wiring so that there is no twist, unnecessary sag, or excessive tension, except for movable part, where sag be required.

(1) Wiring
(2) Clamp
**(A) Correct**
**(B) Incorrect**

W1011587

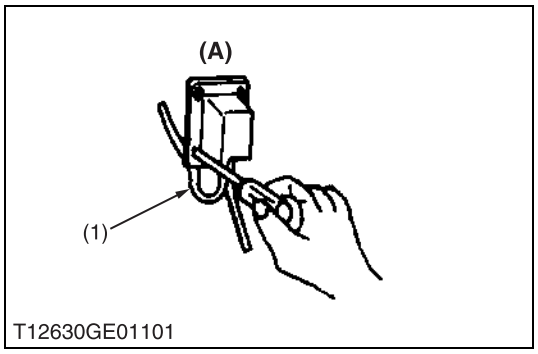


- In installing a part, take care not to get wiring caught by it.

(1) Wiring
**(A) Incorrect**

W1011670

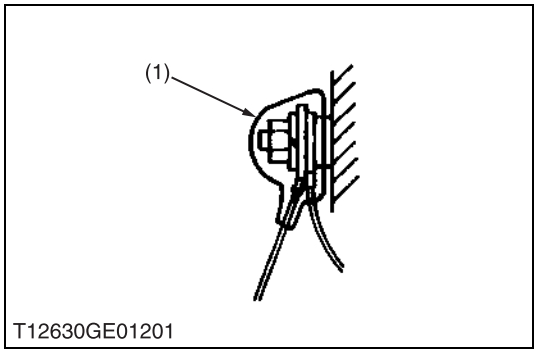


- After installing wiring, check protection of terminals and clamped condition of wiring, only connect battery.

(1) Cover
  • Securely Install Cover

W1011735

## [2] BATTERY

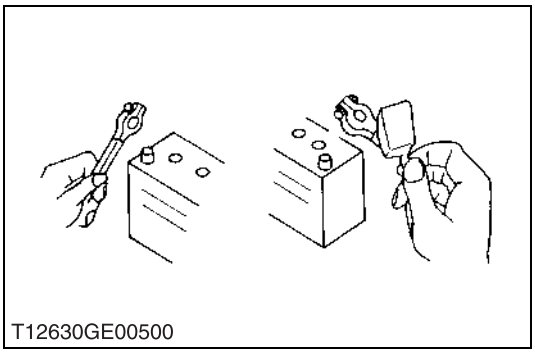
T12630GE00500

- Take care not to confuse positive and negative terminal posts.
- When removing battery cables, disconnect negative cable first. When installing battery cables, check for polarity and connect positive cable first.
- Do not install any battery with capacity other than is specified (Ah).
- After connecting cables to battery terminal posts, apply high temperature grease to them and securely install terminal covers on them.
- Do not allow dirt and dust to collect on battery.

**CAUTION**

- **Take care not to let battery liquid spill on your skin and clothes. If contaminated, wash it off with water immediately.**
- **Before recharging the battery, remove it from the machine.**
- **Before recharging, remove cell caps.**
- **Do recharging in a well-ventilated place where there is no open flame nearby, as hydrogen gas and oxygen are formed.**

W1011816

## [3] FUSE

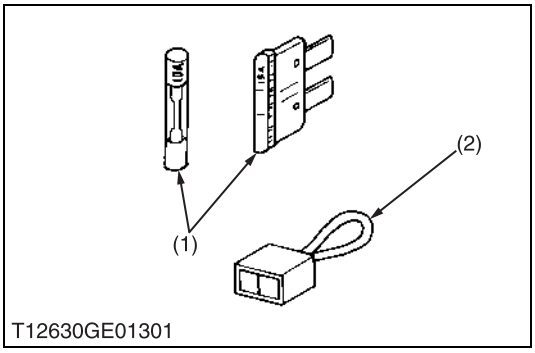

T12630GE01301

- Use fuses with specified capacity.
  Neither too large or small capacity fuse is acceptable.
- Never use steel or copper wire in place of fuse.
- Do not install working light, radio set, etc. on machine which is not provided with reserve power supply.
- Do not install accessories if fuse capacity of reserve power supply is exceeded.

(1) Fuse (2) Slow Blow Fuse

W1012092

## [4] CONNECTOR

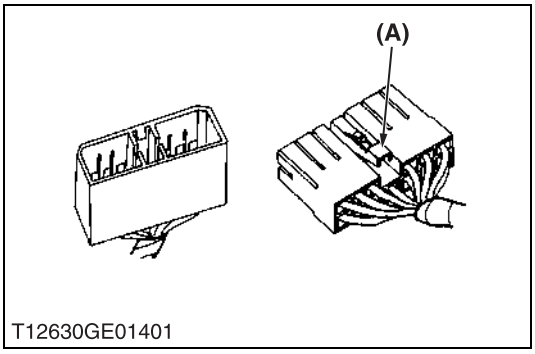

T12630GE01401

- For connector with lock, push lock to separate.

**(A) Push**

W1012211

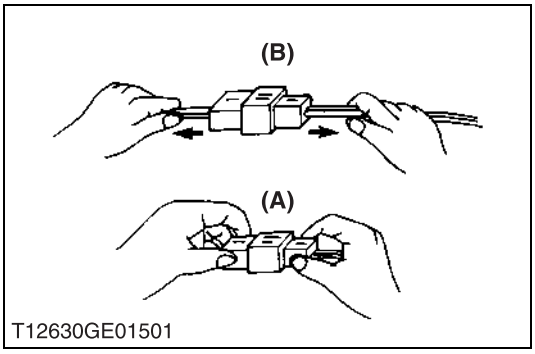

T12630GE01501

- In separating connectors, do not pull wire harnesses.
- Hold connector bodies to separate.

**(A) Correct** **(B) Incorrect**

W1012272

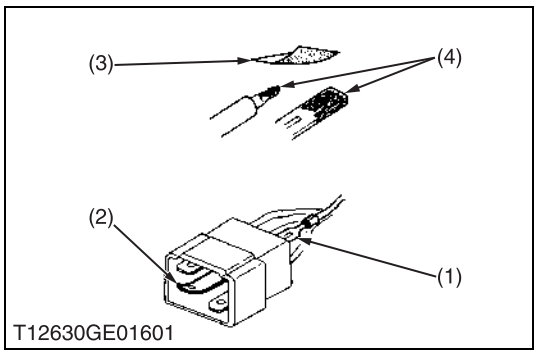

T12630GE01601

- Use sandpaper to remove rust from terminals.
- Repair deformed terminal. Make certain there is no terminal being exposed or displaced.

(1) Exposed Terminal
(2) Bend Terminal
(3) Sandpaper
(4) Rust

W1012346

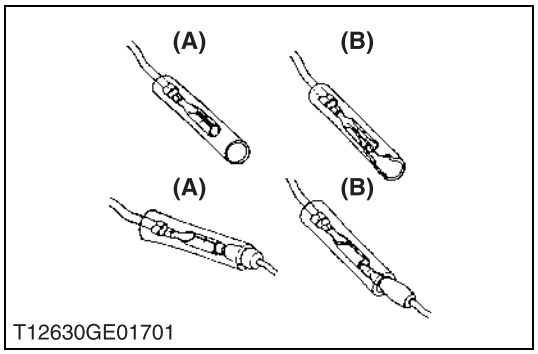

T12630GE01701

- Make certain that there is no female connector being too open.

**(A) Correct**
**(B) Incorrect**

W1012430

## [5] HANDLING OF CIRCUIT TESTER

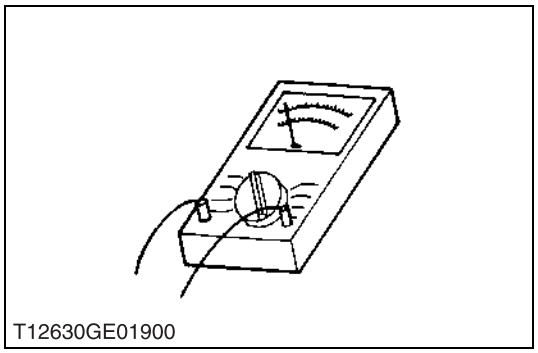
T12630GE01900

- Use tester correctly following manual provided with tester.
- Check for polarity and range.

W1012684

# 4. LUBRICANTS, FUEL AND COOLANT

| No. | Place | | Capacity | | | Lubricants, fuel and coolant |
|---|---|---|---|---|---|---|
| | | | ZD18(F) | ZD21(F) | ZD28(F) | |
| 1 | Fuel | | 30 L<br>7.9 U.S.gals.<br>6.6 Imp.gals. | | | No. 2-D diesel fuel<br>No. 1-D diesel fuel if temperature is below – 10 °C (14 °F) |
| 2 | Coolant | Cooling system | 2.6 L<br>2.7 U.S.qts.<br>2.3 Imp.qts. | | 3.8 L<br>4.0 U.S.qts.<br>3.3 Imp.qts. | Fresh clean water (soft water) with anti-freeze |
| | | Recovery tank | 0.25 L<br>0.26 U.S.qts.<br>0.22 Imp.qts. | | | |
| 3 | Engine crankcase | | 3.2 L*<br>3.4 U.S.qts.<br>2.8 Imp.qts. | 3.5 L*<br>3.7 U.S.qts.<br>3.1 Imp.qts. | 3.4 L*<br>3.6 U.S.qts.<br>3.0 Imp.qts. | Engine oil : API Service Classification CC or CD<br>Below 0 °C (32 °F) : SAE10W, 10W-30 or 10W-40<br>0 to 25 °C (32 to 77 °F) : SAE20, 10W-30 or 10W-40<br>Above 25 °C (77 °F) : SAE30, 10W-30 or 10W-40 |
| 4 | Transmission case | | 3.2 L<br>3.4 U.S.qts.<br>2.8 Imp.qts. | | | KUBOTA UDT or SUPER UDT fluid** |
| 5 | Transmission case with filter & hose | | 4.0 L<br>4.2 U.S.qts.<br>3.5 Imp.qts. | | | |
| 6 | Rear axle case | | 1.8 L each<br>1.9 U.S.qts. each<br>1.6 Imp.qts. each | | | KUBOTA UDT or SUPER UDT fluid** or SAE 80 · 90 gear oil |
| 7 | Mower gear case | | 0.40 L<br>0.42 U.S.qts.<br>0.35 Imp.qts. | | | SAE 90 gear oil |

* Oil amount when the oil level is the upper of the oil level gauge.
** KUBOTA original transmission hydraulic fluid

| Greasing, oiling (Machine) | | | | |
|---|---|---|---|---|
| **No.** | **Place** | **No. of greasing point** | **Capacity** | **Type of grease** |
| 8 | Motion control lever boss | 2 | Until grease overflows | SAE multi-purpose type grease |
| 9 | Motion control lever | 2 | | |
| 10 | Center pin | 1 | | |
| 11 | King pin | 2 | | |
| 12 | Front wheel | 2 | | |
| 13 | Front lift arm | 2 | | |
| 14 | Universal joint | 3 | | |
| 15 | Seat adjuster | 2 | | |
| 16 | Throttle cable | 2 | Moderate amount | Engine oil |
| **Greasing (Mower)** | | | | |
| 17 | Universal joint | 3 | Until grease overflows | SAE multi-purpose type grease |
| 18 | Three spindle shafts | 3 | | |
| 19 | Belt tension pulley | 1 | | |
| 20 | Belt tension pivot | 1 | | |

# 5. TIGHTENING TORQUES

## [1] GENERAL USE SCREWS, BOLTS AND NUTS

**Screws, bolts, and nuts whose tightening torques are not specified in this Workshop Manual should be tightened according to the table below.**

| Indication on top of bolt | 4 No-grade or 4T | | | | | | 7 7T | | | | | | 9 9T | | |
|---|---|---|---|---|---|---|---|---|---|---|---|---|---|---|---|
| Material of bolt | SS400, S20C | | | | | | S43C, S48C | | | | | | SCr435, SCM435 | | |
| Material of opponent part | Ordinariness | | | Aluminum | | | Ordinariness | | | Aluminum | | | Ordinariness | | |
| Unit / Diameter | N·m | kgf·m | ft-lbs | N·m | kgf·m | ft-lbs | N·m | kgf·m | ft-lbs | N·m | kgf·m | ft-lbs | N·m | kgf·m | ft-lbs |
| **M6** (6 mm, 0.24 in.) | 7.85 to 9.31 | 0.80 to 0.95 | 5.79 to 6.87 | 7.85 to 8.82 | 0.80 to 0.90 | 5.79 to 6.50 | 9.81 to 11.2 | 1.00 to 1.15 | 7.24 to 8.31 | 7.85 to 8.82 | 0.80 to 0.90 | 5.79 to 6.50 | 12.3 to 14.2 | 1.25 to 1.45 | 9.05 to 10.4 |
| **M8** (8 mm, 0.31 in.) | 17.7 to 20.5 | 1.8 to 2.1 | 13.1 to 15.1 | 16.7 to 19.6 | 1.7 to 2.0 | 12.3 to 14.4 | 23.6 to 27.4 | 2.4 to 2.8 | 17.4 to 20.2 | 17.7 to 20.5 | 1.8 to 2.1 | 13.1 to 15.1 | 29.5 to 34.3 | 3.0 to 3.5 | 21.7 to 25.3 |
| **M10** (10 mm, 0.39 in.) | 39.3 to 45.1 | 4.0 to 4.6 | 29.0 to 33.2 | 31.4 to 34.3 | 3.2 to 3.5 | 23.2 to 25.3 | 48.1 to 55.8 | 4.9 to 5.7 | 35.5 to 41.2 | 39.3 to 44.1 | 4.0 to 4.5 | 29.0 to 32.5 | 60.9 to 70.6 | 6.2 to 7.2 | 44.9 to 52.0 |
| **M12** (12 mm, 0.47 in.) | 62.8 to 72.5 | 6.4 to 7.4 | 46.3 to 53.5 | – | – | – | 77.5 to 90.2 | 7.9 to 9.2 | 57.2 to 66.5 | 62.8 to 72.5 | 6.4 to 7.4 | 46.3 to 53.5 | 103 to 117 | 10.5 to 12.0 | 76.0 to 86.7 |
| **M14** (14 mm, 0.55 in.) | 108 to 125 | 11.0 to 12.8 | 79.6 to 92.5 | – | – | – | 124 to 147 | 12.6 to 15.0 | 91.2 to 108 | – | – | – | 167 to 196 | 17.0 to 20.0 | 123 to 144 |
| **M16** (16 mm, 0.63 in.) | 167 to 191 | 17.0 to 19.5 | 123 to 141 | – | – | – | 197 to 225 | 20.0 to 23.0 | 145 to 166 | – | – | – | 260 to 304 | 26.5 to 31.0 | 192 to 224 |
| **M18** (18 mm, 0.71 in.) | 246 to 284 | 25.0 to 29.0 | 181 to 209 | – | – | – | 275 to 318 | 28.0 to 32.5 | 203 to 235 | – | – | – | 344 to 402 | 35.0 to 41.0 | 254 to 296 |
| **M20** (20 mm, 0.79 in.) | 334 to 392 | 34.0 to 40.0 | 246 to 289 | – | – | – | 368 to 431 | 37.5 to 44.0 | 272 to 318 | – | – | – | 491 to 568 | 50.0 to 58.0 | 362 to 419 |

W1034542

## [2] METRIC SCREWS, BOLTS AND NUTS

| Grade / Unit / Nominal Diameter | Property class 8.8 (8.8) | | | Property class 10.9 (10.9) | | |
|---|---|---|---|---|---|---|
| | N·m | kgf·m | ft-lbs | N·m | kgf·m | ft-lbs |
| **M8** | 23.6 to 27.4 | 2.4 to 2.8 | 17.4 to 20.2 | 29.4 to 34.3 | 3.0 to 3.5 | 21.7 to 25.3 |
| **M10** | 48.1 to 55.8 | 4.9 to 5.7 | 35.5 to 41.2 | 60.8 to 70.5 | 6.2 to 7.2 | 44.9 to 52.1 |
| **M12** | 77.5 to 90.1 | 7.9 to 9.2 | 57.2 to 66.5 | 103.0 to 117.0 | 10.5 to 12.0 | 76.0 to 86.8 |
| **M14** | 124.0 to 147.0 | 12.6 to 15.0 | 91.2 to 108.0 | 167.0 to 196.0 | 17.0 to 20.0 | 123.0 to 144.0 |
| **M16** | 196.0 to 225.0 | 20.0 to 23.0 | 145.0 to 166.0 | 260.0 to 303.0 | 26.5 to 31.0 | 192.0 to 224.0 |

W1016172

# [3] AMERICAN STANDARD SCREWS, BOLTS AND NUTS WITH UNC OR UNF THREADS

| Grade / Unit / Nominal Diameter | SAE GR.5 | | | SAE GR.8 | | |
|---|---|---|---|---|---|---|
| | N·m | kgf·m | ft-lbs | N·m | kgf·m | ft-lbs |
| **5/16** | 23.1 to 27.8 | 2.35 to 2.84 | 17.0 to 20.5 | 32.5 to 39.3 | 3.31 to 4.01 | 24.0 to 29.0 |
| **3/ 8** | 47.5 to 57.0 | 4.84 to 5.82 | 35.0 to 42.0 | 61.0 to 73.2 | 6.22 to 7.47 | 45.0 to 54.0 |
| **1/ 2** | 108.5 to 130.2 | 11.07 to 13.29 | 80.0 to 96.0 | 149.2 to 179.0 | 15.22 to 18.27 | 110.0 to 132.0 |
| **9/16** | 149.2 to 179.0 | 15.22 to 18.27 | 110.0 to 132.0 | 217.0 to 260.4 | 22.14 to 26.57 | 160.0 to 192.0 |
| **5/ 8** | 203.4 to 244.1 | 20.75 to 24.91 | 150.0 to 180.0 | 298.3 to 358.0 | 30.44 to 36.53 | 220.0 to 264.0 |

W1022485

# 6. MAINTENANCE CHECK LIST

| No. | Items | Period | Service interval | | | | | After purchase | | Important | Reference page |
|---|---|---|---|---|---|---|---|---|---|---|---|
| | | | 50 | 100 | 150 | 200 | 400 | 1 year | 2 years | | |
| 1 | Engine oil | Change | ★ | ☆ | | | | | | | G-16 |
| 2 | Engine oil filter | Replace | ★ | | | ☆ | | | | | G-17 |
| 3 | Transmission fluid | Change | | | | ★ | ☆ | | | | G-19 |
| 4 | Transmission oil filter | Replace | ★ | | | ☆ | | | | | G-17 |
| 5 | Transmission strainer | Clean | | | | ★ | ☆ | | | | G-19 |
| 6 | Rear axle gear case (RH & LH) fluid | Change | | | | ★ | ☆ | | | | G-20 |
| 7 | Front axle pivot | Adjust | | ★ | | ☆ | | | | | G-18 |
| 8 | Safety device | Check | ☆ | | | | | | | | G-21 |
| 9 | Greasing (without mower) | – | ☆ | | | | | | | | G-23 |
| 10 | Mower gear box oil | Check | ☆ | | | | | | | | G-25 |
| | | Change | | | ☆ | | | | | | G-30 |
| 11 | Air cleaner element | Clean | ☆ | | | | | | | *1 | G-25 |
| | | Replace | | | | | | ☆ | | *2 | G-32 |
| 12 | Battery condition | Check | | ☆ | | | | | | | G-25 |
| 13 | Fan belt | Adjust | | ☆ | | | | | | | G-27 |
| 14 | Parking brake | Adjust | | ☆ | | | | | | | G-28 |
| 15 | Fuel filter element | Check | | ☆ | | | | | | | G-27 |
| | | Replace | | | | | ☆ | | | | G-32 |
| 16 | Fuel line | Check | | ☆ | | | | | | | G-27 |
| | | Replace | | | | | | | ☆ | | G-35 |
| 17 | Radiator hose and clamp | Check | | | | ☆ | | | | | G-30 |
| | | Replace | | | | | | | ☆ | | G-35 |
| 18 | Hydraulic hose | Check | | | | ☆ | | | | | G-30 |
| | | Replace | | | | | | | ☆ | | G-35 |
| 19 | Intake air line | Check | | | | ☆ | | | | | G-31 |
| | | Replace | | | | | | | ☆ | | G-35 |
| 20 | Motion control lever pivot | Adjust | | | | ☆ | | | | | G-31 |
| 21 | Radiator | Clean | | | | | | ☆ | | | G-33 |
| 22 | Coolant | Change | | | | | | ☆ | | | G-33 |
| 23 | Mower gear box oil seal | Replace | | | | | | | ☆ | | G-35 |
| 24 | Fuel system | Bleed | Service as required | | | | | | | | G-37 |
| 25 | Fuse | Replace | | | | | | | | | G-36 |
| 26 | Blade | Replace | | | | | | | | | G-37 |
| 27 | Mower belt | Replace | | | | | | | | | G-37 |

W1037757

■ **IMPORTANT**

- **The jobs indicated by ★ must be done initially.**

***1 Air cleaner should be cleaned more often in dusty conditions than in normal conditions.**

***2 Every year or every 6 times of cleaning.**

# 7. CHECK AND MAINTENANCE

**CAUTION**

- **Be sure to check and service the machine on a flat place with engine shut off, the parking brake on and chock the wheels.**

## [1] DAILY CHECK

To prevent trouble from occurring, it is important to know the condition of the machine. Check the following items before starting.

**Checking**

- Check areas where previous trouble was experienced.
- Walk around the machine.

1. Tire pressure, wear and damage
2. Oil and water leak
3. Engine oil level
4. Transmission fluid level
5. Coolant level in the recovery tank
6. Damage of machine body, tightness of all bolts and nuts
7. Radiator screen
8. Panel screen
9. Brake play
10. Air cleaner
11. Fuel level
12. Oiling

- Mower

1. Oil leak
2. Make sure blade cap screws are tight.
3. Check blades for wear or damage.
4. Check all hardware.
5. Make sure all pins are in place.
6. Mower deck cleaning
7. Greasing

- While sitting in the operator's seat,

1. Motion control lever
2. Parking brake

- Turning the key switch **"ON"**

1. Performance of the easy checker light

- Starting the engine,

1. Color of the exhaust fumes
2. Safety start switch, seat safety control and another safety control and another safety devices.
3. Check for abnormal noise and vibration.

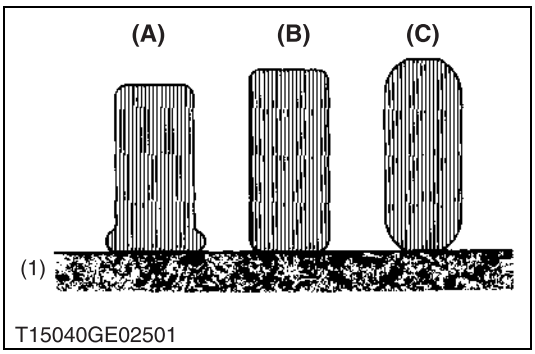


## Checking Tire Pressure

**WARNING**

**To avoid personal injury:**

- **Do not attempt to mount a tire on a rim. This should be done by a qualified person with the proper equipment.**
- **Always maintain the correct tire pressure.**
  **Inflation pressure in front tires rises quickly when using compressed air.**
  **Do not inflate tires above the recommended pressure shown in the Operator's Manual.**

■ **IMPORTANT**

- **Do not use tires larger than specified.**

■ **Inflation Pressure**

Though the inflation pressure is factory-set to the prescribed level, it naturally drops slowly in the course of time. Thus, check it and inflate as necessary.

| | Tire Sizes | Recommended Inflation Pressure |
|---|---|---|
| Front | 15 × 6.0-6, 4PR Rib | 207 kPa (2.1 kgf/cm$^2$, 30 psi) |
| Rear | 23 × 10.5-12, 4PR Turf | 140 kPa (1.4 kgf/cm$^2$, 20 psi) |
| | 24 × 12.0-12, 4PR Turf | 140 kPa (1.4 kgf/cm$^2$, 20 psi) |

(1) Ground

**(A) Insufficient**
**(B) Normal**
**(C) Excessive**

W1041550

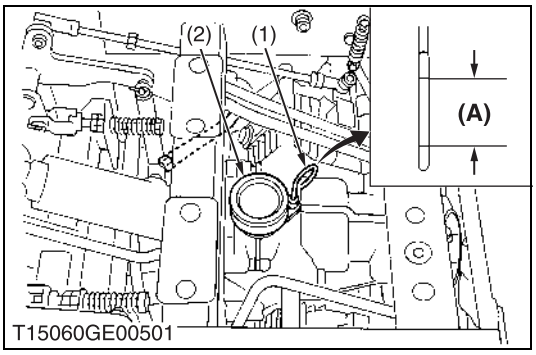


## Checking Transmission Fluid Level

1. Park the machine on a flat surface, lower the implement to the ground and shut off engine and remove the key.
2. Raise and lock the operator's seat.
3. To check the oil level, draw out the dipstick, wipe it clean, replace it, and draw it out again. Check to see that the oil level lies between the two notches. If the level is too low, add new oil to the prescribed level at the oil inlet.
   (See page G-7.)

■ **IMPORTANT**

- **If oil level is low, do not run engine.**

(1) Oil Level Dipstick
(2) Oil Plug and Breather Cup

**(A) Oil level is acceptable within this range.**

W1041984

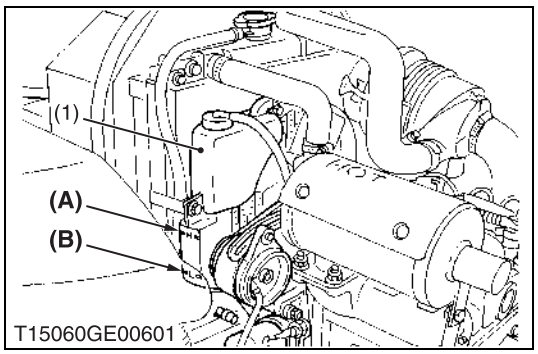


## Checking Coolant Level

**CAUTION**

**To avoid personal injury:**

- **Do not remove the radiator cap when the engine is hot. Then loosen cap slightly to the stop to relieve any excess pressure before removing cap completely.**

1. Check to see that the coolant level is between the **"FULL"** and **"LOW"** marks of recovery tank.
2. When the coolant level drops due to evaporation, add water only up to the full level of the recovery tank.
   In case of leakage, add anti-freeze and water in the specified mixing ratio up to the full level.
   (See page G-7.)

■ **IMPORTANT**

- **If the radiator cap has to be removed, follow the caution above and securely retighten the cap.**
- **Use clean, distilled water and anti-freeze to fill the recovery tank.**

(1) Recovery Tank
**(A) FULL**
**(B) LOW**

W1042377

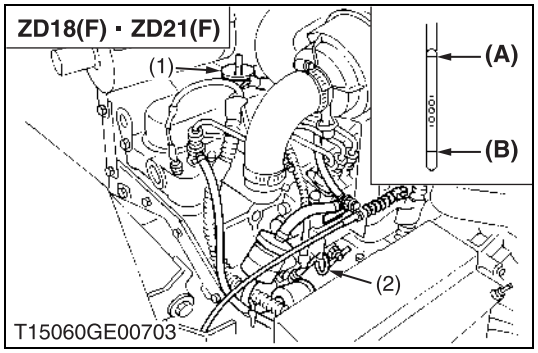


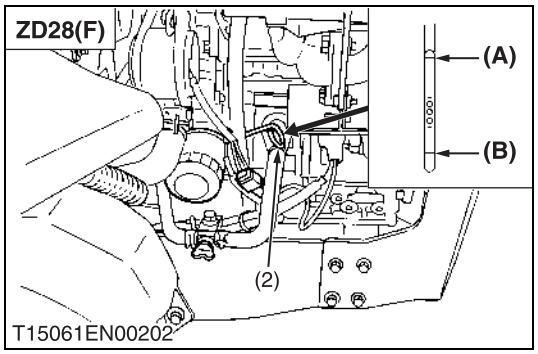


## Checking Engine Oil Level

**CAUTION**

**To avoid personal injury:**

- **Always stop the engine and remove the key before checking oil.**

1. Check engine oil before starting and 5 minutes or more after the engine has stopped.
2. Wipe dipstick area clean.
3. To check the oil level, remove the dipstick, wipe it clean, replace it, and draw it out again. Check to see that the oil level is between the two notches.
4. Add new oil to the prescribed level at the oil port if necessary.
5. When using a different brand or viscosity oil from the previous one, remove all of the old oil and oil filter. Never mix two different types of oil.
6. Use the proper Engine Oil SAE according to the ambient temperatures. (See page G-7.)

(1) Engine Oil Port
(2) Oil Level Dipstick
**(A) Upper Level**
**(B) Lower Level**

W1042659

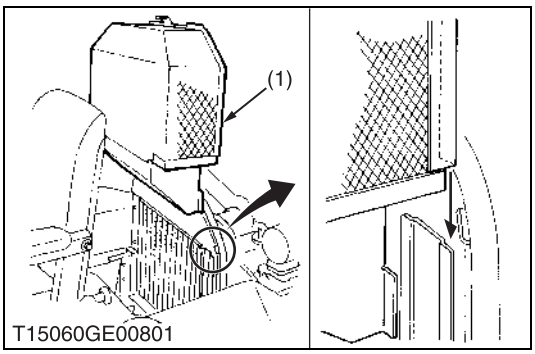


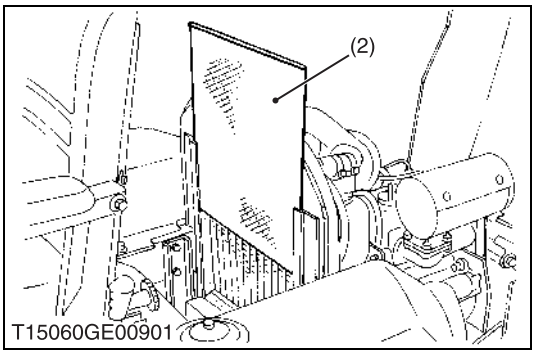


## Checking and Cleaning Radiator to Prevent Overheating

**CAUTION**

**To avoid personal injury:**

- **Be sure to stop the engine and remove the key before cleaning.**

Daily or after every 5 hours of operation, check to be sure the radiator screen and radiator core are clean. Dirt or chaff on the radiator screen or radiator core decrease cooling performance.

1. Remove the radiator screen and panel screen and remove all foreign material.
2. Remove the dust from between the fins and the tube.
3. Tighten the fan drive belt as necessary. For this, refer to “EVERY 100 HOURS” in Maintenance section.
4. If scale forms in the tube, clean with the scale inhibitor or its equivalent.
5. Each time the panel screen is covered with grass during operation, rub it off the screen with hand. Check the radiator screen from time to time if grass accumulates.
6. If the dust or chaff has accumulated inside of the panel, remove the radiator screen and clean inside completely.
   After cleaning, replace the radiator screens properly.

**NOTE**

- **When assembling the panel screen, be sure to fit it in the runners.**

(1) Panel Screen
(2) Radiator Screen

W1043048

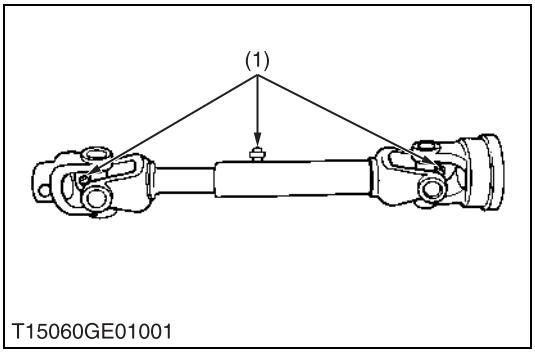


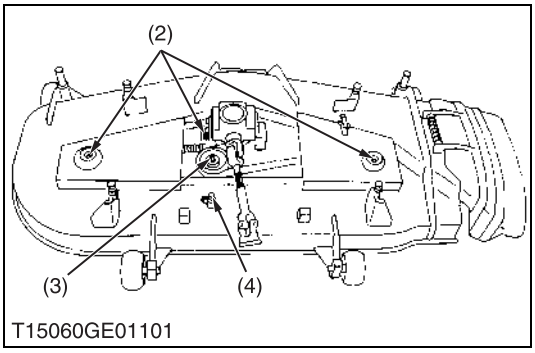


## Greasing (Mower)

**CAUTION**

**To avoid personal injury:**

- **Be sure to stop the engine and remove the key before greasing.**

1. Apply grease to the following position as figures.

(1) Mower Universal Joint
(2) Spindle Shaft
(3) Belt Tension Pulley
(4) Belt Tension Pivot

W1043490

# [2] CHECK POINTS OF INITIAL 50 HOURS

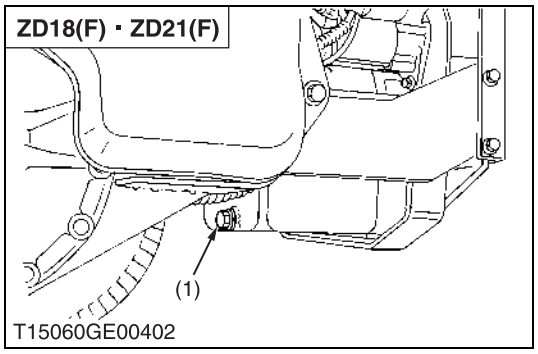


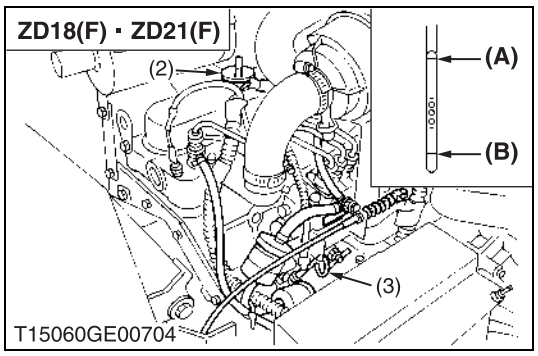


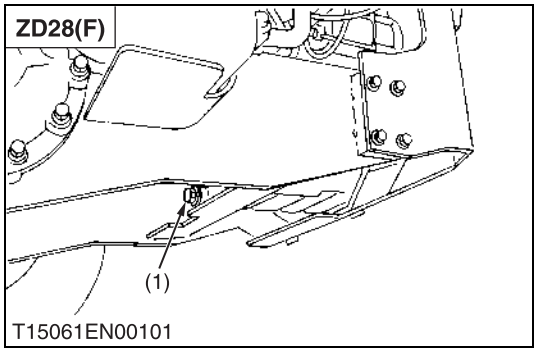


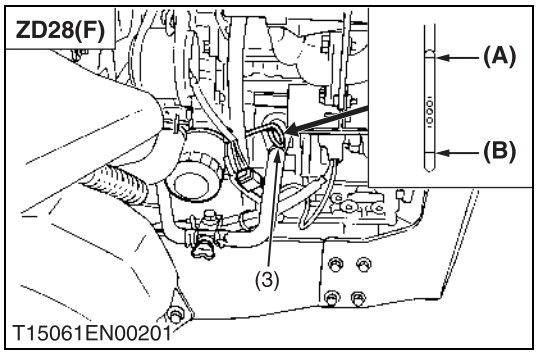


## Changing Engine Oil

**CAUTION**

- **Be sure to stop the engine before changing oil.**

1. Start and warm up the engine for approx. 5 minutes.
2. Place an oil pan underneath the engine.
3. To drain the used oil, remove the drain plug (1) at the bottom of the engine and drain the oil completely.
4. Screw in the drain plug (1).
5. Fill new oil up to upper line on the dipstick (3).

■ **IMPORTANT**

- **When using an oil of different manufacture or viscosity from the previous one, remove all of the old oil.**
- **Never mix two different type of oil.**
- **Use the proper SAE engine oil according to ambient temperatures.**
  **Refer to "LUBRICANTS, FUEL AND COOLANT".**
  **(See page G-7.)**

| | | |
|---|---|---|
| Engine oil capacity | ZD18(F) | 3.2 L<br>3.4 U.S.qts.<br>2.8 Imp.qts. |
| | ZD21(F) | 3.5 L<br>3.7 U.S.qts.<br>3.1 Imp.qts. |
| | ZD28(F) | 3.4 L<br>3.6 U.S.qts.<br>3.0 Imp.qts. |

(1) Drain Plug
(2) Oil Inlet Plug
(3) Dipstick

**(A) Upper Level**
**(B) Lower Level**

W1030749

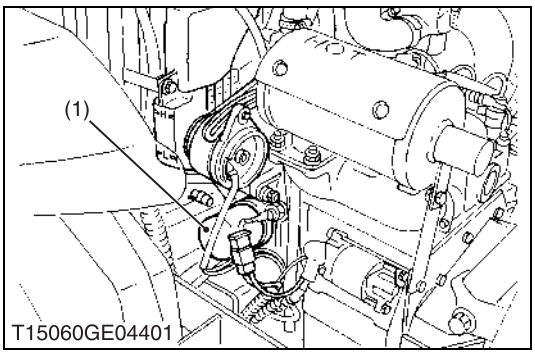


## Replacing Engine Oil Filter Cartridge

**CAUTION**

- **Be sure to stop the engine before changing the oil filter cartridge.**
- **Allow engine to cool down sufficiently, oil can be hot and may cause burns.**

1. Remove the engine oil filter cartridge (1) with the filter wrench.
2. Apply a slight coat of oil onto the rubber gasket of new cartridge.
3. To install the new cartridge, screw it in by hand. Over tightening may cause deformation of rubber gasket.
4. After the cartridge has been replaced, the engine oil level normally lowers a little. Add engine oil to proper level. Check for oil leaks around filter gasket.

**■ IMPORTANT**

- **To prevent serious damage to the engine, element of recommended type must be used. Use only a genuine KUBOTA filter or its equivalent.**

(1) Engine Oil Filter Cartridge

W1030949

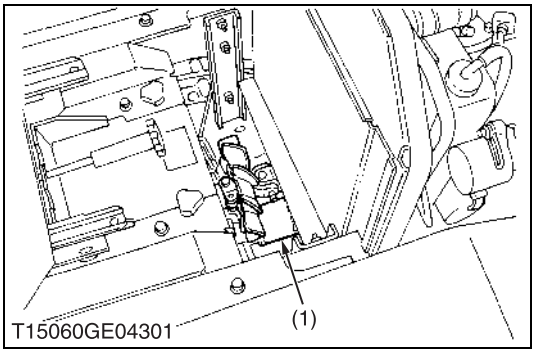


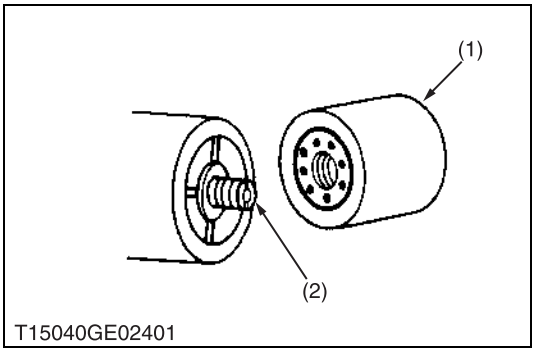


## Replacing Transmission Oil Filter Cartridge

**CAUTION**

- **Be sure to stop the engine before changing the oil filter cartridge.**
- **Allow transmission case to cool down sufficiently; oil can be hot and may cause burns.**

1. The oil filter cartridge must be changed every 300 service hours.
2. Remove the oil filter cartridge with the filter wrench.
3. Lightly tighten the screw (2) by using a screwdriver.
4. Apply a slight coat of oil onto the cartridge gasket.
5. To install the new cartridge, screw it in by hand.
   Over tightening may cause deformation of rubber gasket.
6. After the new cartridge has been replaced, the transmission fluid level normally lowers a little. Add fluid to proper level. Check for oil leaks around filter gasket.

**■ IMPORTANT**

- **To prevent serious damage to hydraulic system, the replacement filter must be a highly efficient, 10 μm filter. Use only a genuine KUBOTA filter or its equivalent.**

(1) Transmission Oil Filter Cartridge (2) Screw

W1031068

# [3] CHECK POINT OF INITIAL 100 HOURS

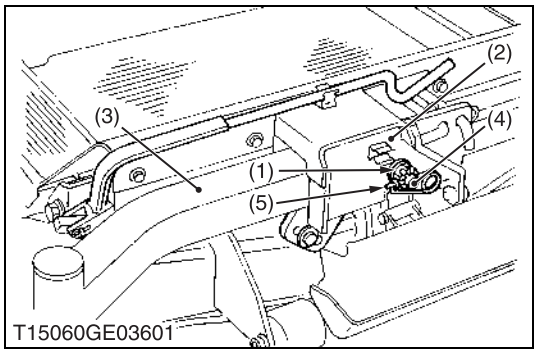

T15060GE03601

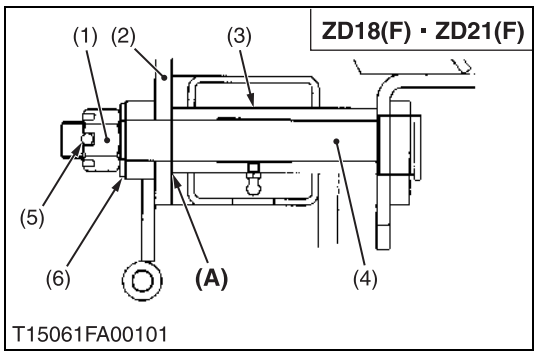

T15061FA00101

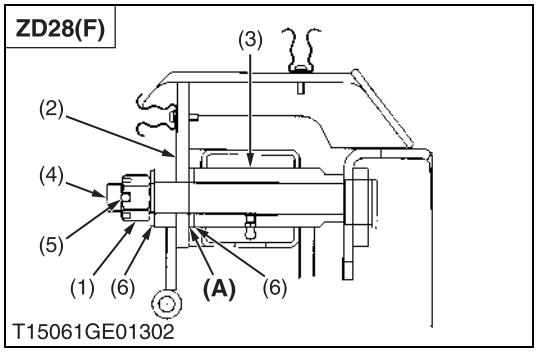

T15061GE01302

**Adjusting Front Axle Pivot**

1. Lift up and securely block the front of the machine.
2. Measure the clearance **(A)** between the front axle (3) and front axle support (2).
3. If the measurement exceeds the allowable limit, remove the set spring (5) and adjust the end play by slotted nut (1).

**(When reassembling)**

| | | |
|---|---|---|
| Tightening torque | Center pin lock nut (Slotted nut) | 40 to 80 N·m<br>4.08 to 8.16 kgf·m<br>29.50 to 59.00 ft-lbs |

■ **NOTE**

- **When fastening the center pin (4), tighten the nut (1) so that the front axle maybe oscillated smoothly by hand.**

| | | |
|---|---|---|
| Front axle end play **(A)** | Factory spec. | 0 to 0.2 mm<br>0 to 0.008 in. |
| | Allowable limit | 0.5 mm<br>0.02 in. |

(1) Slotted Nut
(2) Front Axle Support
(3) Front Axle
(4) Center Pin
(5) Set Spring
(6) Plain Washer

**(A) Front Axle End Play**

W1053511

# [4] CHECKING POINTS OF INITIAL 200 HOURS

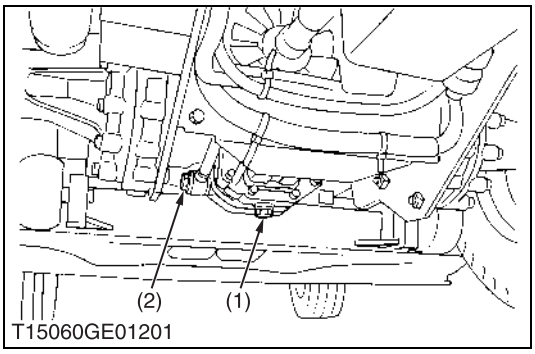


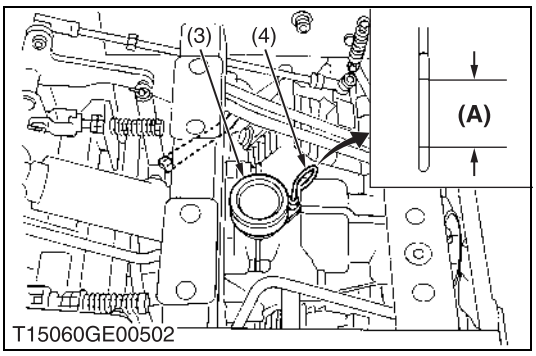


## Changing Transmission Fluid

**CAUTION**

- **Be sure to stop the engine before changing the transmission fluid.**

1. Place an oil pan underneath the transmission case.
2. Remove the drain plugs (1) at the bottom of the transmission case and drain the oil completely.
3. After draining, screw in the drain plug.
4. Fill new oil from filling port after removing the filling plug (3) up to the upper notch on the dipstick.
5. After running the engine for a few minutes, stop it and check the oil level again, if low, add oil to prescribed level.

■ **IMPORTANT**

- **Use only multi-grade transmission oil. Use of other oils may damage the transmission or hydraulic system.**
  **Refer to "LUBRICANTS, FUEL AND COOLANT". (See page G-7.)**
- **Never work the machine immediately after changing the transmission oil. Keeping the engine at medium speed for a few minutes prevents damage to the transmission.**
- **Do not mix different brands oil together.**

| | |
|---|---|
| Transmission fluid capacity (with filter and hose) | 4.0 L<br>4.2 U.S.qts.<br>3.5 Imp.qts. |

(1) Drain Plug
(2) Transmission Strainer
(3) Oil Plug and Breather Cup
(4) Dipstick

**(A) Oil level acceptable within this range.**

W1048918

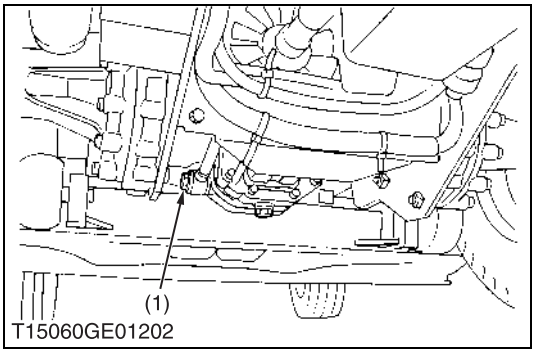


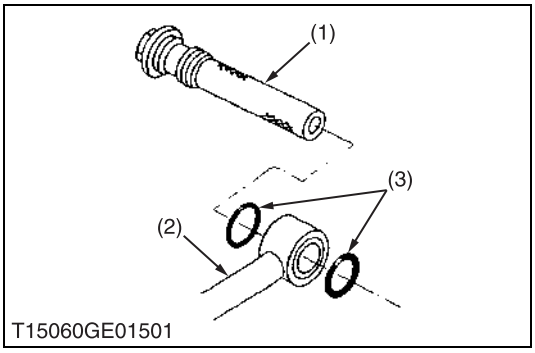


## Cleaning Transmission Strainer

When changing the transmission fluid, disassemble and rinse the strainer with nonflammable solvent to completely clean off filings.

Check O-rings (3), replace if damaged, cracked or hardened.

When reassembling be careful not to damage the parts.

■ **NOTE**

- **Since the fine filings in the oil can damage the precision component parts of the hydraulic system, the end of the suction line is provided with an oil strainer.**

(1) Strainer
(2) Suction Line
(3) O-ring

W1049356

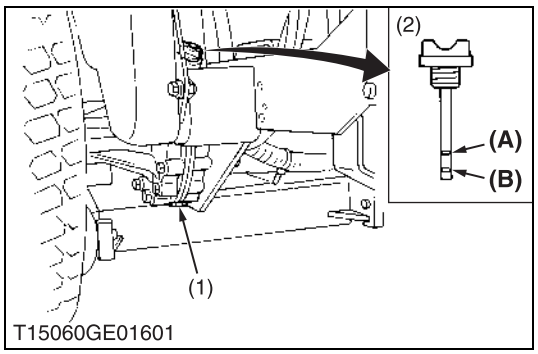


## Changing Rear Axle Case Oil (RH & LH)

**CAUTION**

- **Be sure to stop the engine before changing the transmission fluid.**

1. Place an oil pan underneath the rear axle gear case.
2. Remove the drain plugs (1) at the bottom of the transmission case and drain the oil completely.
3. After draining, screw in the drain plug.
4. Fill new oil from filling port after removing the filling plug (2) up to the upper line of the gauge.
5. After running the engine for a few minutes, stop it and check the oil level again, if low, add oil to prescribed level.

■ **IMPORTANT**

- **Use only multi-grade transmission oil. Use of other oils may damage the transmission or hydraulic system.**
  **Refer to "LUBRICANTS, FUEL AND COOLANT". (See page G-7.)**
- **Never work the machine immediately after changing the transmission oil. Keeping the engine at medium speed for a few minutes prevents damage to the transmission.**
- **Do not mix different brands oil together.**

| | |
|---|---|
| Rear axle case oil capacity | 1.8 L each<br>1.9 U.S.qts. each<br>1.6 Imp.qts. each |

(1) Drain Plug
(2) Filling Plug with Gauge
**(A) Upper Level**
**(B) Lower Level**

W1049491

# [5] CHECK POINTS OF EVERY 50 HOURS

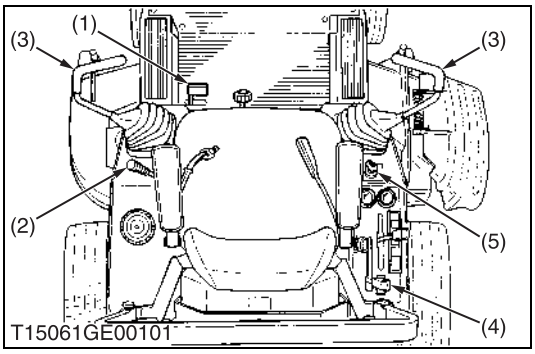


**Checking Safety Device**

**CAUTION**

**To avoid personal injury:**

- **Do not allow anyone near the machine while testing.**
- **If the machine does not pass one of the following tests, do not operate the machine.**
- **Sit on operator's seat for all tests except for Test 1.**

■ **Test 1 (OPERATOR NOT ON THE SEAT)**

1. Securely set the parking brake.
2. Shift the PTO lever (4) to **"DISENGAGE" (OFF)** position.
3. Set the motion control levers (3) to the **"NEUTRAL LOCK"** position.
4. Turn the key switch (5) to **"START"** position.
5. The engine must not crank.

■ **Test 2 (OPERATOR ON THE SEAT)**

1. Do not set the parking brake. (Release it from test 1.)
2. Shift the PTO lever (4) to **"DISENGAGE" (OFF)** position.
3. Set the motion control levers (3) to the **"NEUTRAL LOCK"** position.
4. Turn the key switch (5) to **"START"** position.
5. The engine must not crank.

■ **Test 3 (OPERATOR ON THE SEAT)**

1. Securely set the parking brake.
2. Shift the PTO lever (4) to **"DISENGAGE" (OFF)** position.
3. Grasp the motion control levers (3) and move then inward from **"NEUTRAL LOCK"** position to **"NEUTRAL"** position and then release the levers.
4. Turn the key switch (5) to **"START"** position.
5. The engine must not crank.

■ **Test 4 (OPERATOR ON THE SEAT)**

1. Securely set the parking brake.
2. Shift the PTO lever (4) to **"ENGAGE" (ON)** position.
3. Grasp the motion control levers (3) and move then inward from **"NEUTRAL LOCK"** position to **"NEUTRAL"** position and then release the levers.
4. Turn the key switch (5) to **"START"** position.
5. The engine must not crank.

■ **Test 5 (OPERATOR ON THE SEAT)**

1. Start the engine.
2. Keeps the parking brake securely set.
3. Shift the PTO lever (4) to **"DISENGAGE" (OFF)** position.
4. Grasp the motion control levers (3) and move then inward from **"NEUTRAL LOCK"** position to **"NEUTRAL"** position and then release the levers.
5. The engine must shut off after a short time delay.

■ **IMPORTANT**

- **For this test only, the engine will shut off in a few seconds.**

(1) Parking Brake Lock Pedal
(2) Parking Brake Release Lever
(3) Motion Control Lever
(4) PTO Lever
(5) Key Switch

W1050412

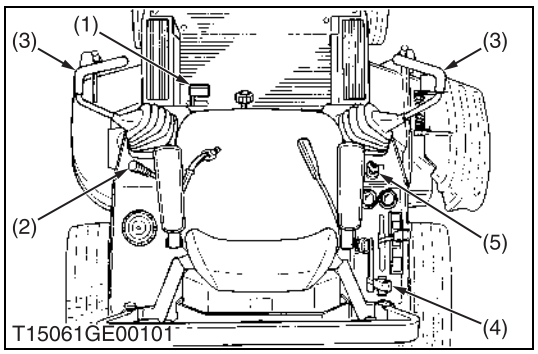


■ **Test 6 (OPERATOR ON THE SEAT)**

1. Start the engine.
2. Do not set the parking brake.
3. Shift the PTO lever (4) to **"DISENGAGE" (OFF)** position.
4. Grasp the motion control levers (3) and move then inward from **"NEUTRAL LOCK"** position to **"NEUTRAL"** position and then release the levers.
5. Stand up. (Do not get off the machine.)
6. The engine must shut off.

■ **Test 7 (OPERATOR ON THE SEAT)**

1. Start the engine.
2. Do not set the parking brake.
3. Shift the PTO lever (4) to **"ENGAGE" (ON)** position.
4. Stand up. (Do not get off the machine.)
5. The engine must shut off.

(1) Parking Brake Lock Pedal
(2) Parking Brake Release Lever
(3) Motion Control Lever
(4) PTO Lever
(5) Key Switch

W1032761

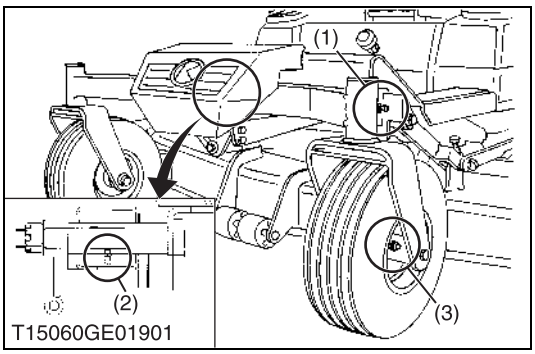


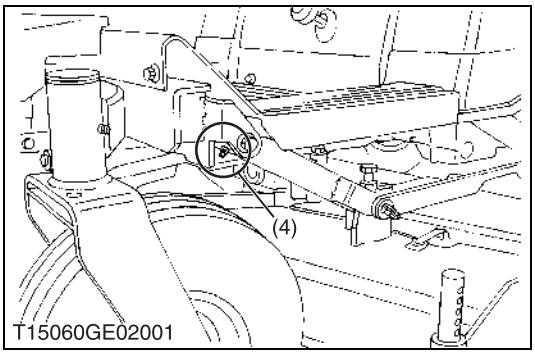


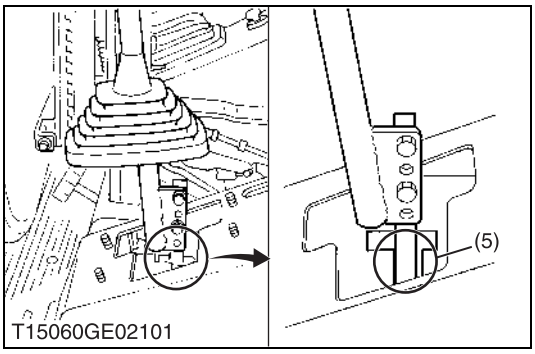


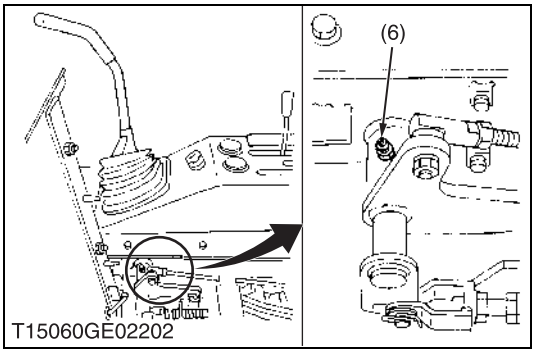


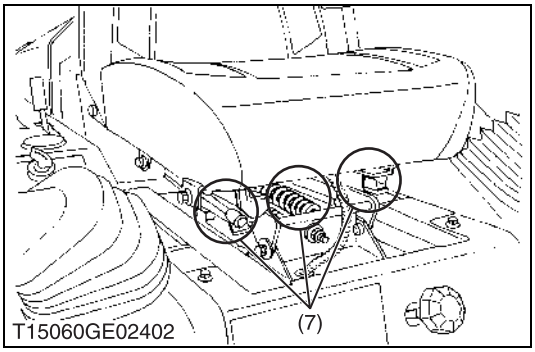


## Greasing

1. Apply a grease to the following position as figures.

**CAUTION**

**To avoid personal injury:**

- **Be sure to stop the engine and remove the key before greasing.**

(1) King Pin (LH · RH)
(2) Center Pin
(3) Front Wheel (LH · RH)
(4) Front Lift Arm (LH · RH)
(5) Motion Control Levers (LH · RH)
(6) Motion Control Lever Boss (LH · RH)
(7) Seat Adjuster

W1034228

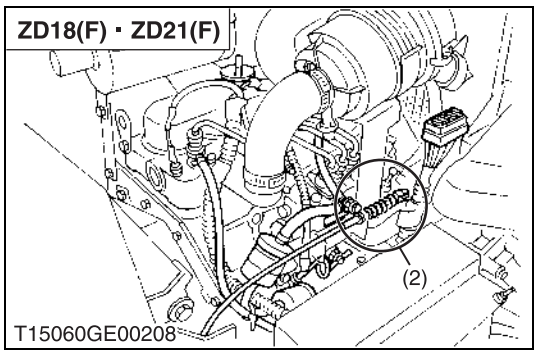


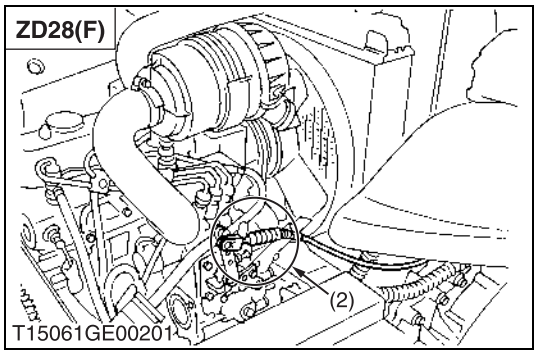


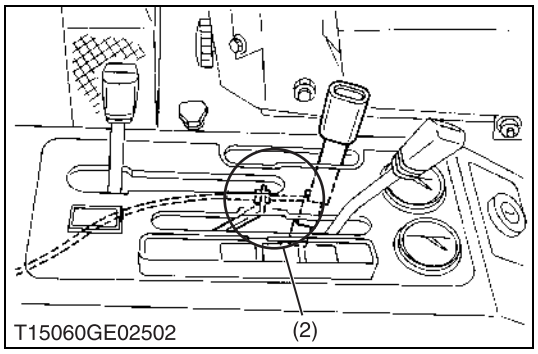


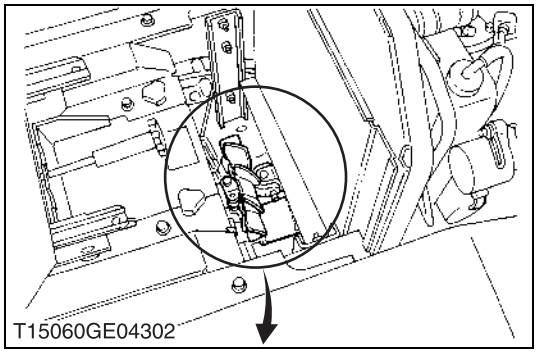


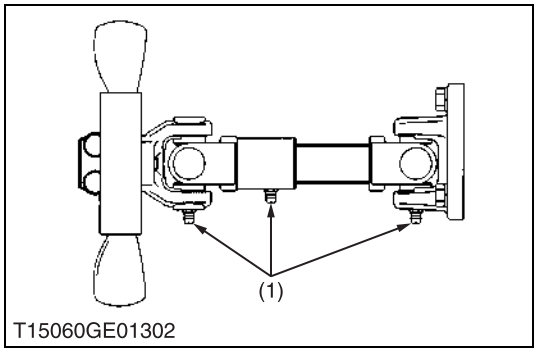


## Greasing (Continued)

1. Apply a grease to the following position as figures.

**CAUTION**

**To avoid personal injury:**

- **Be sure to stop the engine and remove the key before greasing.**

(1) Machine Universal Joint (2) Throttle Cable (Oil)

W1035206

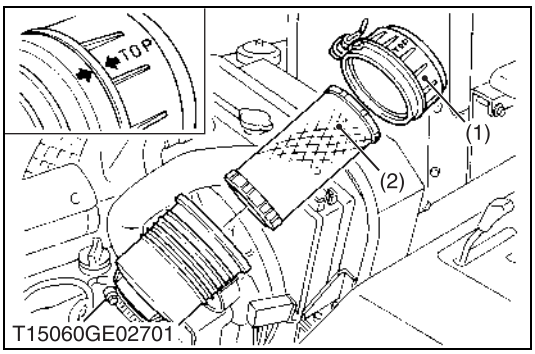


**Cleaning Air Cleaner Element**

1. The air cleaner uses a dry element, never apply oil.
2. Do not touch the filter element except where cleaning is required. To clean the element, use clean and dry compressed air on the inside of the element. Air pressure should not exceed 205 kPa (2.1 kgf/cm$^2$, 30 psi).

■ **NOTE**

- **Operating in dusty conditions requires more frequent maintenance.**
- **Align the arrow marks when reinstalling the air cleaner cover.**

(1) Air Cleaner Cover (2) Air Cleaner Element

W1053698

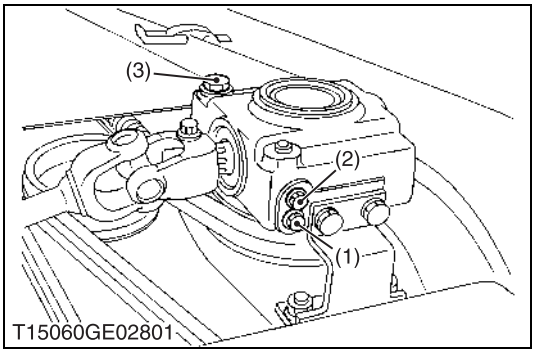


**Checking Gear Box Oil Level**

**CAUTION**

**To avoid personal injury:**

- **Always stop the engine and remove the key before checking oil.**

1. Park the machine on a flat surface and lower the mower to the ground.
   To check the oil level, loosen check plug bolt and check to see that the oil level is just below the check plug port.
   If the level is too low, add new oil to the prescribed level at the oil inlet.
   (See page G-7.)

(1) Drain Plug (Bolt) (3) Oil Filler Plug
(2) Check Plug (Bolt)

W1054012

# [6] CHECK POINTS OF EVERY 100 HOURS

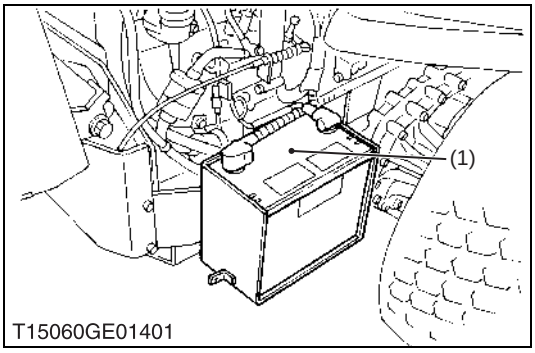


**Checking Battery Condition**

**CAUTION**

- **Never remove the vent cap while the engine is running. Keep electrolyte away from eyes, hands and clothes. If you are spattered with it, wash it away completely with water immediately and get medical attention.**
- **Wear eye protection and rubber gloves when working around battery.**

Mishandling the battery shortens the service life and adds to maintenance costs.

The original battery is a maintenance-free, non accessible type battery.

If the battery is weak, the engine will be difficult to start and the lights will become dim. It is important to check the battery periodically.

(1) Battery

W1083097

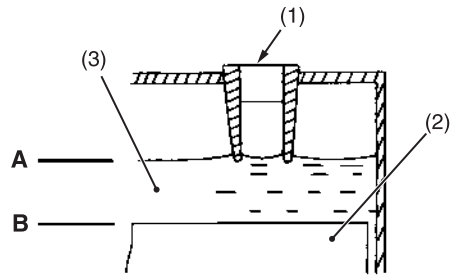


T15040GE03701

| Battery voltage | Refference state of charge |
|---|---|
| 12.6 | 100% (Full charge) |
| 12.4 | 75% |
| 12.2 | 50% |
| 12.0 | 25% |
| 11.8 | 0% |

T15040GE06300

## ■ Battery Charging

**DANGER**

**To avoid serious injury or death:**

- **When the battery is being activated, hydrogen and oxygen gases in the battery are extremely explosive. Keep open sparks and flames away from the battery at all times, especially when charging the battery.**

**CAUTION**

- **When charging battery, ensure that the vent caps are securely in place (if equipped).**
- **When disconnecting the cables from the battery, start with the negative terminal first.**
  **When connecting the cables to the battery, start with the positive terminal first.**
- **Never check battery charge by placing a metal object across the posts.**
  **Use a voltmeter or hydrometer.**
  (For accessible maintainable type batteries with removable vent caps.)

1. Make sure each electrolyte level is at the bottom of vent wells, if necessary add distilled water in a well-ventilated area.
2. The water in the electrolyte evaporates during recharging. Liquid shortage damages the battery. Excessive liquid spills over and damages the machine body.
3. To slow charge the battery, connect the battery positive terminal to the charger positive terminal and the negative to the negative, then recharge in the standard fashion.
4. A boost charge is only for emergencies. It will partially charge the battery at a higher rate and in a short time.
   When using a boost-charged battery, it is necessary to recharge the battery as soon as possible.
   Failure to do this will shorten the battery's service life.
5. When the specific gravity of electrolyte reaches 1.27 to 1.29, charge has completed.
6. When exchanging an old battery with new one, use a battery of equal specification shown in "SPECIFICATIONS".
   (For non-accessible maintenance-free type batteries.)
   Maintenance-free, non-accessible batteries are designed to eliminate the need to add water. Yet the volume of electrolyte above plates may eventually become depleted due to abnormal conditions such as high heat or improper regulator setting. Use a voltmeter to check the state of charge. (See reference chart to determine if charging is necessary.)

(1) Vent well
(2) Separator
(3) Electrolyte

**(A) Highest Level**
**(B) Lowest Level**

W1035046

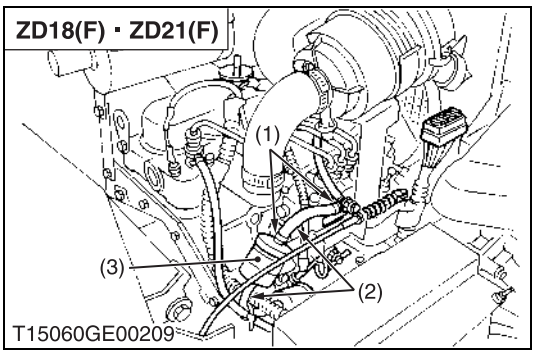


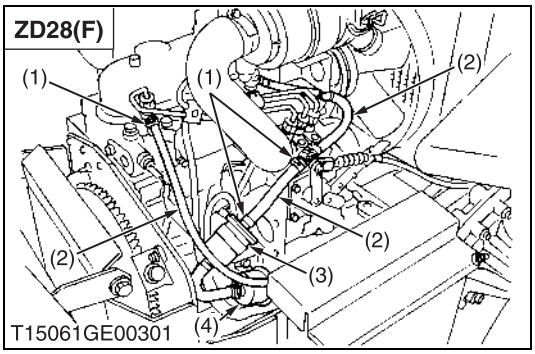


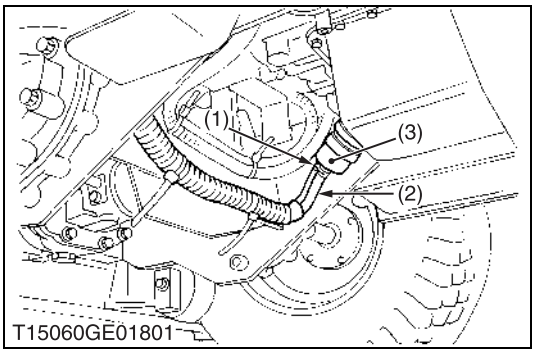


## Checking Fuel Lines And Fuel Filter

**CAUTION**

- **Be sure to stop the engine and remove the key when attempting to make the following checks and changes.**
- **Never fail to check the fuel lines periodically. The fuel lines are subject to wear and age. Fuel may leak out onto the running engine, causing a fire.**

The fuel line connections should be checked annually or every 100 service hours, whichever comes first.

1. The fuel lines is made of rubber and ages regardless of service period.
2. If the fuel line and clamps are found damages or deteriorated, replace them.
3. Check fuel filter, if it is clogged by debris, and replace it.

**■ IMPORTANT**

- **When the fuel line is disconnected for maintenance or repair, close both ends of the fuel line with a piece of clean cloth or paper to prevent dust and dirt from entering. In addition, particular care must be taken not to admit dust and dirt into the fuel pump. Entrance of dust and dirt causes malfunction of the fuel pump and injector components.**

(1) Pipe Clamps
(2) Fuel Line
(3) Fuel Filter
(4) Fuel Pump

W1034725

## Changing Engine Oil

1. See page G-16.

W1034674

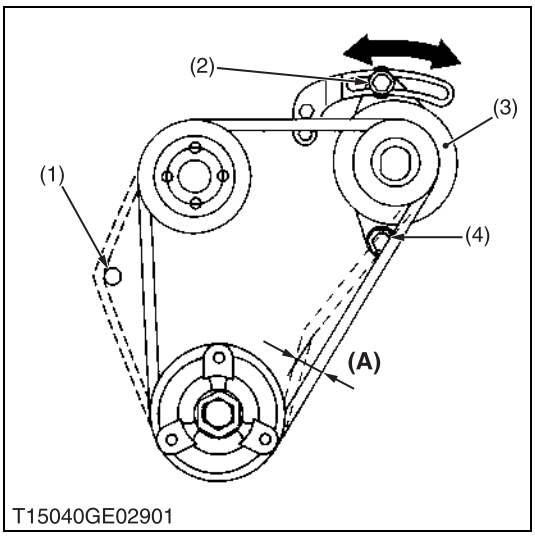


## Adjusting Fan Belt Tension

**CAUTION**

- **Be sure to stop the engine and remove the key before checking belt tension.**

1. If the fan drive belt becomes loose, the engine may overheat.
2. To adjust, loosen bolts and turn the alternator to tighten the belt.
3. After adjustment, securely tighten the bolts.

**Moderate belt tension:**

The belt deflect approx. 10 mm (0.4 in.) when the center of the belt is depressed with finger pressure of 98 N (10 kgf, 22 lbs).

| | | |
|---|---|---|
| Fan belt tension **(A)** | Factory spec. | Approx. 10 mm<br>0.4 in. |

**■ IMPORTANT**

- **When replacing fan belt, be careful not to catch it on the cap under the water pump. See the illustration to the left.**

(1) Cap
(2) Tension bolt
(3) Alternator
(4) Adjustment bolt

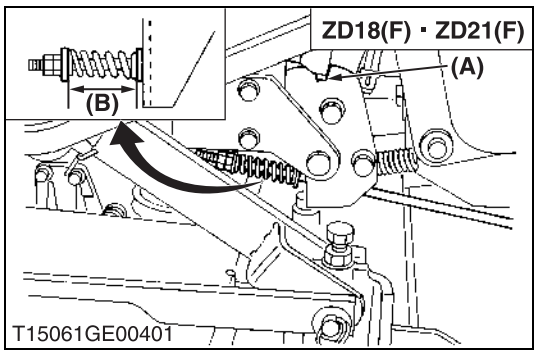


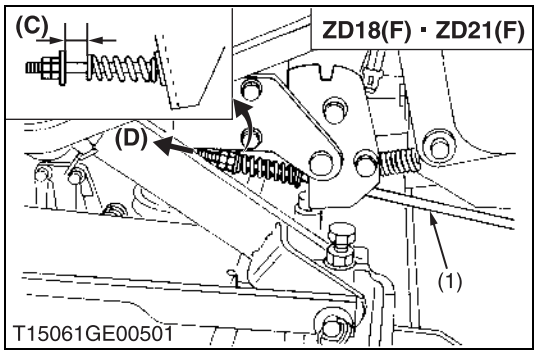


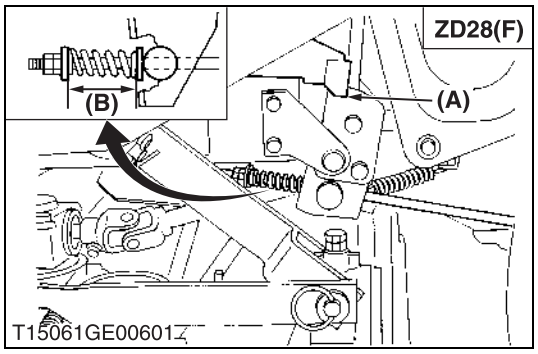


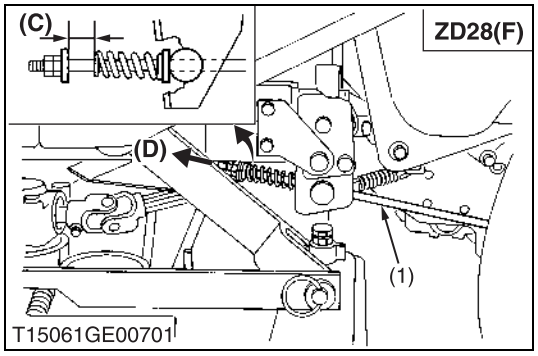


## Checking Parking Brake

**CAUTION**

**To avoid personal injury:**

- **Stop the engine and chock the wheels before checking or adjusting.**
- **Park the machine on a hard and level surface.**

■ **IMPORTANT**

- **Wrong adjustment may cause machine damage.**

■ **Check**

1. Place the motion control levers to **"NEUTRAL LOCK"** position.
2. Be sure to chock the rear wheels.
3. Apply the parking brake to the notch.
4. Check the length of the brake springs on both sides.

| | | |
|---|---|---|
| Proper brake spring length **(B)** with the brake applied to the notch **(A)** | ZD18(F)<br>ZD21(F) | 56 mm<br>2.20 in. |
| | ZD28(F) | 70 mm<br>2.76 in. |

5. Release the parking brake.
6. Pull the brake rod fully forward by hand and hold.
7. Check the brake spring play.

| | |
|---|---|
| Proper brake spring play **(C)** | 1.0 to 2.0 mm<br>0.04 to 0.08 in. |

8. If these dimensions are not correct, adjust.

(1) Brake Rod

**(A) Notch**
**(B) Parking Brake Spring Length**
**(C) Brake Spring Play**
**(D) Pull the Brake Rod**

W1059278

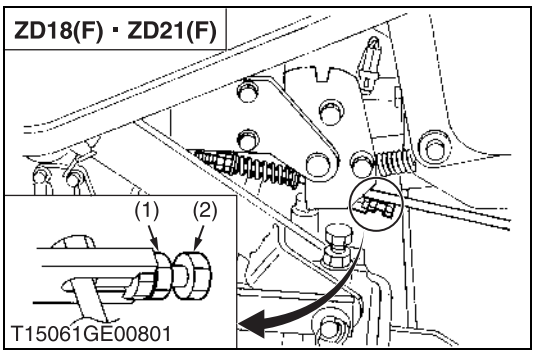


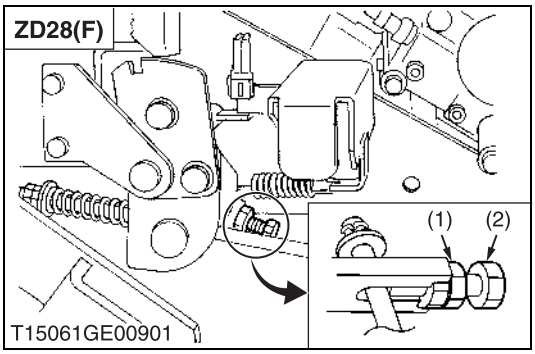


■ **Adjustment of brake spring play**

1. Place the motion control lever to **"NEUTRAL LOCK"** position.
2. Be sure to chock the rear wheels.
3. Release the parking brake.
4. Loosen the lock nuts.
5. Pull the brake rod fully forward by hand and hold.
6. Tighten the nut to the correct space between the end of the spring and the plain washer.
7. Lock the nuts.
8. Adjust the other side spring to the same dimension.

■ **Adjustment of brake length**

1. Place the motion control lever to **"NEUTRAL LOCK"** position.
2. Apply the parking brake to the notch.
3. Loosen the lock nuts.
4. Adjust the spring length to the recommendation.
5. Lock the nuts.
6. Check the brake spring play to the recommendation.
   If there is no play, adjust the brake spring play again.
7. Adjust the other side spring to the same dimension.

■ **Check the play of parking brake lock pedal**

1. Place the motion control levers to **"NEUTRAL LOCK"** position.
2. Be sure to chock the rear wheels.
3. Release the parking brake completely.
4. Check that parking brake release lever moves at the same time as the parking brake lock pedal is depressed.
5. If parking brake release lever does not move momentarily, adjust.

■ **Adjustment of parking brake lock pedal play**

1. Place the motion control lever to **"NEUTRAL LOCK"** position.
2. Be sure to chock the rear wheels.
3. Release the parking brake completely.
4. Loosen the lock nuts (1).
5. Adjust bolt (2) just to eliminate parking brake lock pedal play then lock the nut (1) to secure.

W1036954

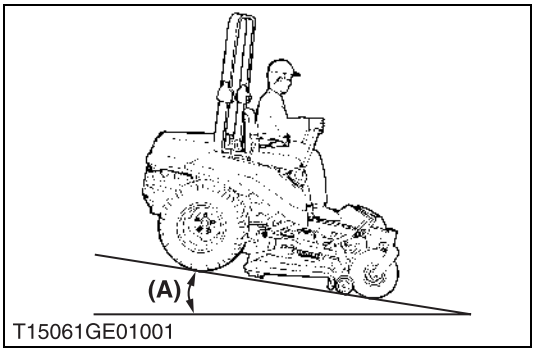


■ **Check on the slope**

1. Place the machine on a 17° ramp.
2. Apply the parking brake.
3. Place the motion control levers in **"NEUTRAL LOCK"** position and shut off the engine.
4. Check that the machine does not move.

■ **NOTE**

- **For parking brake test purposes only use 17° ramp.**

(1) Lock Nut
(2) Bolt
**(A) Under 17° Ramp**

W1037508

# [7] CHECK POINTS OF EVERY 150 HOURS

**Changing Mower Gear Box Oil**

1. See page G-25.

W1036280

# [8] CHECK POINTS OF EVERY 200 HOURS

**Adjusting Front Axle Pivot**

1. See page G-18.

W1064227

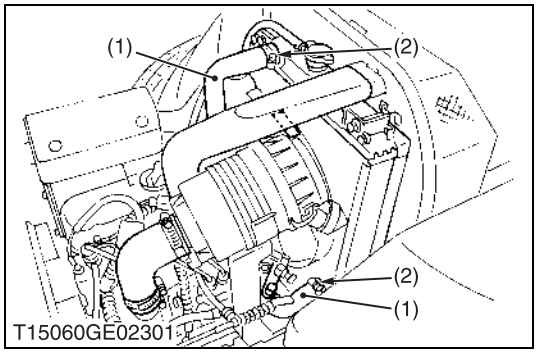


**Checking Radiator Hose and Clamp**

■ **NOTE**
- **Check to see if the radiator hoses are properly fixed every 200 hours of operation or 6 months, whichever comes first.**

1. If clamp bands (2) are loose or water leaks, tighten clamp band (2) securely.
2. Replace radiator hoses (1) and tighten clamp bands (2) securely, if radiator hoses (1) are swollen, hardened or cracked.
   Replace radiator hoses (1) and clamp bands (2) every 2 years or earlier if checked and found that hoses are swollen, hardened or cracked.

■ **NOTE**
- **Take the following actions in the event the coolant temperature be nearly or more than the boiling point, what is called "Overheating".**
- **Park the machine in a safe place and keep the engine unloaded idling.**
- **Don't stop the engine suddenly, but stop it after about 5 minutes of unloaded idling**
- **Keep yourself well away from the machine for further 10 minutes or while the steam is blown out.**
- **Checking that there gets no danger such as burning, get rid of the causes of overheating and then start the engine again.**

(1) Radiator Hose (2) Clamp Band

W1036392

**Changing Engine Oil Filter Cartridge**

1. See page G-17.

W1061492

**Replacing Transmission Oil Filter Cartridge**

1. See page G-17.

W1061793

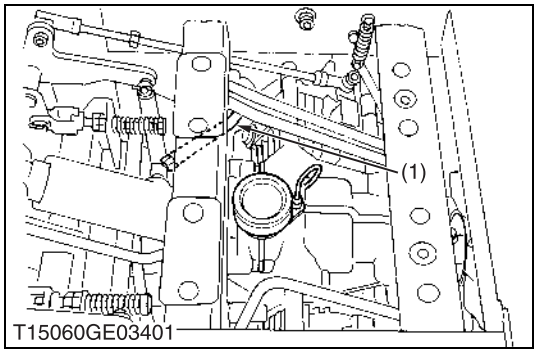


**Checking Hydraulic Hose**

**CAUTION**

**To avoid personal injury:**
- **Be sure to stop the engine and remove the key before checking and replacing hydraulic hose.**
- **Allow transmission case to cool down sufficiently; oil can be hot and may cause burns.**

1. Check to see the hose is tight and not damaged.
2. If the worn or damaged of the hose is found, replace it..

(1) Mower Lift Cylinder Hose

W1036641

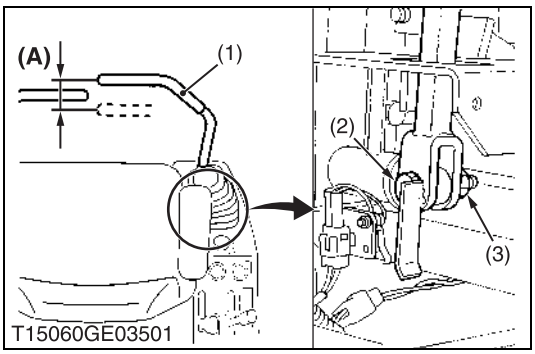


## Adjusting the Motion Control Lever Pivot

**CAUTION**

**To avoid personal injury:**

- **Be sure to stop the engine and set the parking brake to "ON" before checking.**

| | | |
|---|---|---|
| Lever free travel **(A)** | Factory spec. | 2 to 15 mm<br>0.08 to 0.59 in. |

1. Set the motion control lever (1) in the **"NEUTRAL"** position.
2. Slightly move the lever back and forth and measure the free travel at the top of lever stroke.
3. If the free travel limits are exceeded, remove the fender and retighten the nut (3) to specified torque.

■ **NOTE**

- **If the motion control lever pivot bolt (2) is maladjusted, speed control may be difficult.**

| | | |
|---|---|---|
| Tightening torque | Pivot bolt | 18.6 to 20.6 N·m<br>1.9 to 2.1 kgf·m<br>13.7 to 15.2 ft-lbs |

(1) Motion Control Lever
(2) Bolt
(3) Nut
**(A) Free Travel**

W1063124

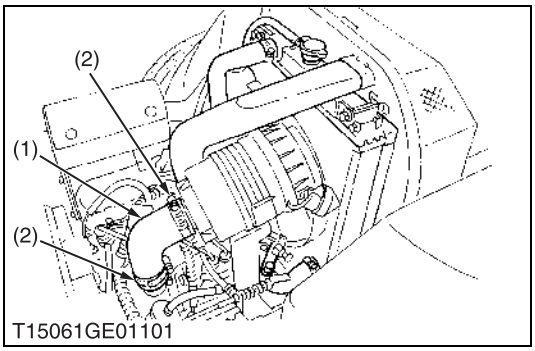


## Checking Intake Air Line

1. Check to see that hoses and hose clamps are tight and not damaged.
2. If hoses and clamps are found worn or damaged, replace or repair them at once.

(1) Hose
(2) Clamp

W1037686

# [9] CHECK POINTS OF EVERY 400 HOURS

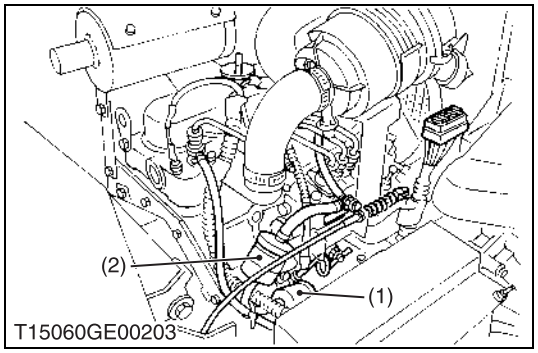


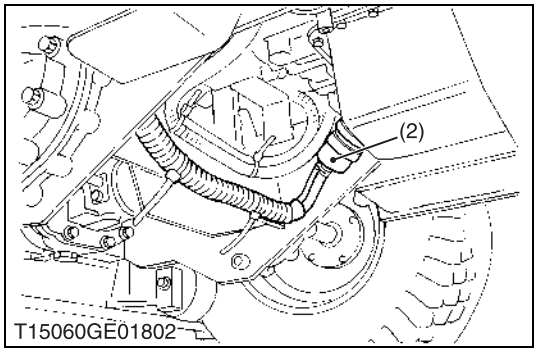


**Replacing Fuel Filter**

1. Disconnect the fuel hoses and loosen the filter band to replace the fuel filter (2).

■ **NOTE**

- **If the fuel line is removed, be sure to properly bleed the fuel system. (See page G-37.)**

(1) Fuel Pump (2) Fuel Filter

W1037174

# [10] CHECK POINTS OF EVERY 1 YEAR

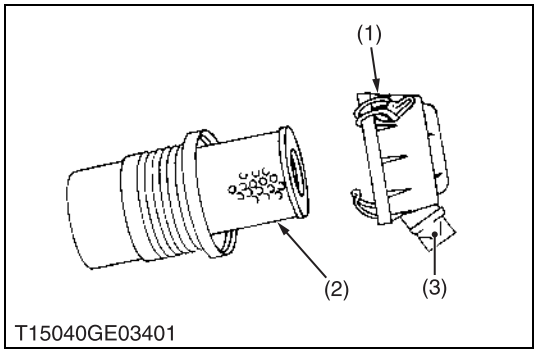


**Replacing Air Cleaner Element**

1. Remove the air cleaner element (2) once a year.

■ **IMPORTANT**

- **The air cleaner uses a dry element, never apply oil.**
- **Do not run the engine with filter element removed.**
- **Be sure to refit the air cleaner cover (1) as shown in the figure. If the air cleaner cover (1) is improperly fitted, evacuator valve (3) will not function and dust will adhere to the element.**
- **If it is loose, dust and dirt may be sucked in, wearing down the cylinder and piston rings earlier and thereby resulting in poor power output.**

(1) Air Cleaner Cover (3) Evacuator Valve
(2) Air Cleaner Element

W1037268

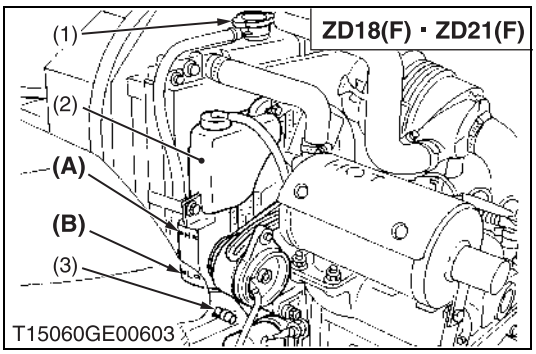


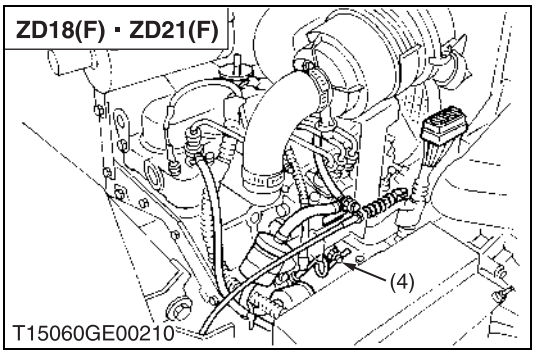


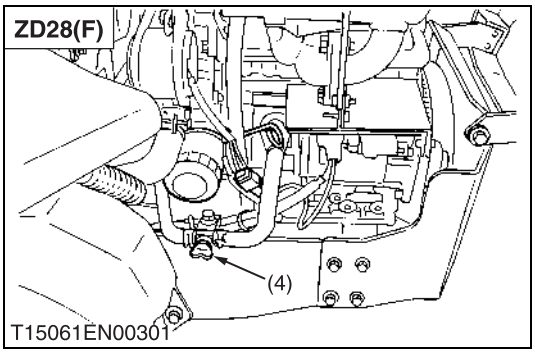


## Flushing Cooling System and Changing Coolant

**CAUTION**

- **Do not remove the radiator cap when the engine is hot. Then loosen cap slightly to the stop to relieve any excess pressure before removing cap completely.**

1. Stop the engine and let cool down.
2. To drain the coolant, open the radiator drain plug (3) and remove the radiator cap (1). The radiator cap (1) must be removed to completely drain the coolant.
3. After all coolant is drained, close the drain plug (3).
4. Fill with clean water and cooling system cleaner.
5. Follow directions of the cleaner instruction.
6. After flushing, fill with clean water and anti-freeze until the coolant level is just below the port. Install the radiator cap (1) securely.
7. Fill with coolant up to **"FULL"** mark on the recovery tank.
8. Start and operate the engine for a few minutes.
9. Stop the engine and let cool. Check coolant level of recovery tank (2) and add coolant if necessary.

■ **IMPORTANT**

- **Do not start engine without coolant.**
- **Use clean, fresh water and anti-freeze to fill the radiator and recovery tank.**
- **When the anti-freeze is mixed with water, the anti-freeze mixing ratio must be less than 50 %.**
- **Securely tighten radiator cap. If the cap is loose or improperly fitted, water may leak out and the engine could overheat.**
- **Refer to "LUBRICANTS, FUEL AND COOLANT". (See page G-7.)**

| | | | |
|---|---|---|---|
| Coolant capacity | Cooling system | ZD18(F)<br>ZD21(F) | 2.6 L<br>2.7 U.S.qts.<br>2.3 Imp.qts. |
| | | ZD28(F) | 3.8 L<br>4.0 U.S.qts.<br>3.3 Imp.qts. |
| | Recovery tank | ZD18(F)<br>ZD21(F)<br>ZD28(F) | 0.25 L<br>0.26 U.S.qts.<br>0.22 Imp.qts. |

(1) Radiator Cap
(2) Recovery Tank
(3) Drain Plug
(4) Drain Cock

**A: FULL**
**B: LOW**

W1037402

## Flushing Cooling System and Changing Coolant (Continued)

### ■ Anti-Freeze

If coolant freezes, the cylinders and radiator can be damaged. It is necessary, if the ambient temperature falls below 0 °C (32 °F), to remove coolant mix it with anti-freeze and full the radiator with it.

1. There are two types of anti-freeze available; use the permanent type (PT) for this engine.
2. Before adding anti-freeze for the first time, clean the radiator interior by pouring fresh water and draining it a few times.
3. The procedure for mixing of water and anti-freeze differs according to the maker of the anti-freeze and the ambient temperature, basically should be referred to SAE J1034, more specially also to SAE J814c.
4. Mix the anti-freeze with water, and then fill in to the radiator.

| Vol % Anti-freeze | Freezing Point | | Boiling Point* | |
|---|---|---|---|---|
| | °C | °F | °C | °F |
| 40 | – 24 | – 12 | 106 | 222 |
| 50 | – 37 | – 34 | 108 | 226 |

* At 101 kPa (760 mmHg) pressure (atmospheric). A higher boiling point is obtained by using a radiator pressure cap which permits the development of pressure within the cooling system.

### ■ NOTE

- **The above date represent industry standards that necessitate a minimum glycol content in the concentrates anti-freeze.**
- **When the coolant level drops due to evaporation, add water only. In case of leakage, add anti-freeze and water in the specified mixing ratio.**
- **Anti-freeze absorbs moisture. Keep unused anti-freeze in a tightly sealed container.**
- **Do not use radiator cleaning agents when anti-freeze has been added to the coolant. (Anti-freeze contains an anti-corrosive agent, which will react with the radiator cleaning agent forming sludge which will affect the engine parts.)**

W1037674

# [11] CHECK POINT OF EVERY 2 YEARS

**Replacing Hydraulic Hose**

1. Replace the hose.
   Refer to “Checking Hydraulic Hose”. (See page G-30.)

W1067327

**Replacing Radiator Hose**

1. Replace the hoses and clamps.
   Refer to “Checking Radiator Hose and Hose Clamp”. (See page G-30.)

W1067436

**Replacing Fuel Lines**

1. Replace the fuel line.
   Refer to “Checking Fuel Lines and Fuel Filter”. (See page G-27.)

W1082371

**Replacing Intake Air Line**

1. Replace the intake air line.
   Refer to “Checking Intake Air Line”. (See page G-31.)

W1052932

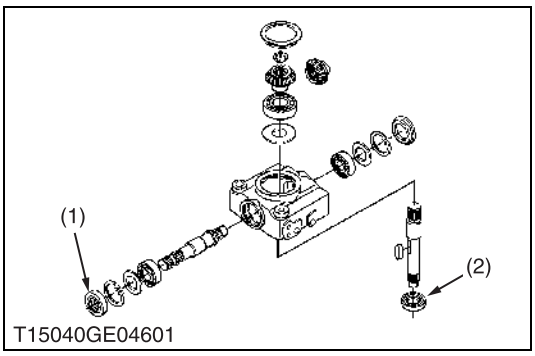


**Replacing Mower Gear Box Seals**

1. Replace the mower gear box oil seals (1), (2).
   Refer to “Disassembling Gear Box Assembly”. (See page 6-S8.)

(1) Oil Seal (2) Oil Seal

W1038357

# [12] OTHERS

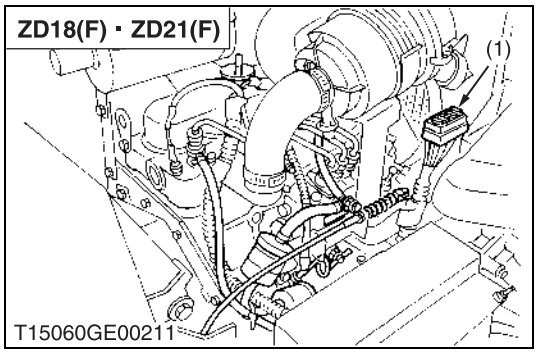


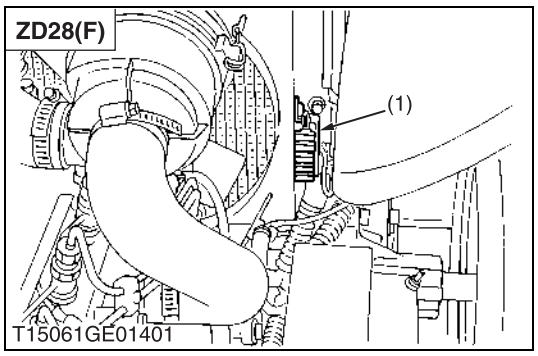


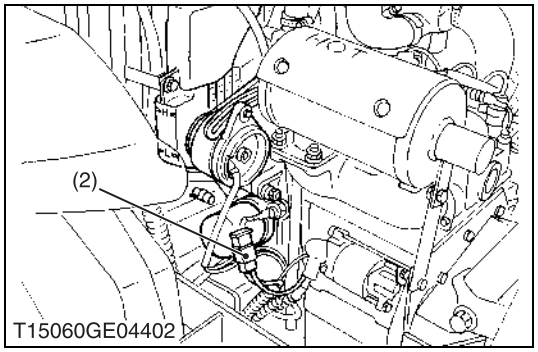


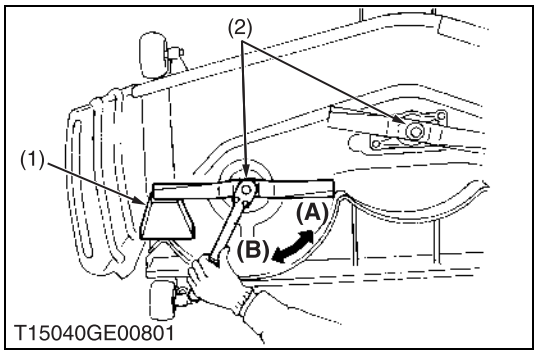


## Replacing Fuses

1. The electrical system is protected from potential damage by fuses.
   A blown fuse indicates that there is an overload or short somewhere in the electrical system.
2. If any of the fuses should blow, replace with a new one of the same capacity.

■ **IMPORTANT**

- **Before replacing a blown fuse, determine why the fuse blew and make any necessary repairs. Failure to follow this procedure may result in serious damage to the electrical system.**

■ **Protected Circuit**

| FUSE NO. (ID LABEL) | CAPACITY (A) | Protected circuit |
|---|---|---|
| 1 | 20A | Engine stop |
| | 15A | Charge system |
| | 15A | Aux. outlet |
| | 15A | Main system |
| | 10A | Control system |
| 2 | Slow blow fuse 40 A | Check circuit against wrong battery connection |

(1) Fuse (2) Slow Blow Fuse

W1038470

## Retightening Mower Blade Screw

**CAUTION**

- **To avoid injury, always handle the mower blade with care.**

1. Tilt up the mower and turn it over to expose the mower blades.
2. Wedge a wooden block (1) securely between the mower blade and mower deck.
3. Retighten the mower blade screw to the specified torque.
4. If the mower blade screw (2) is worn or broken, replace it.

■ **NOTE**

- **The screw of the red-painted mower blade is of inverse helical type.**

| | | |
|---|---|---|
| Tightening torque | Mower blade screw | 98.0 to 117.6 N·m<br>10.0 to 12.0 kgf·m<br>72.0 to 86.8 ft-lbs |

(1) Wooden Block **(A) Loosen**
(2) Mower Blade Screw **(B) Tighten**

W1022525

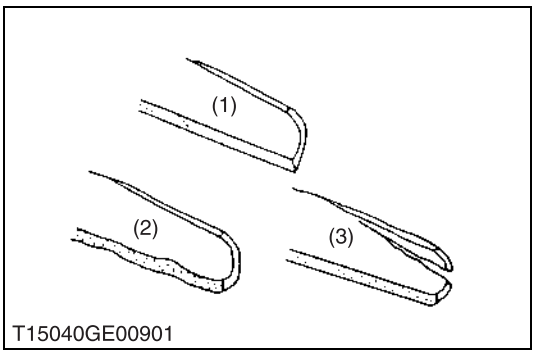


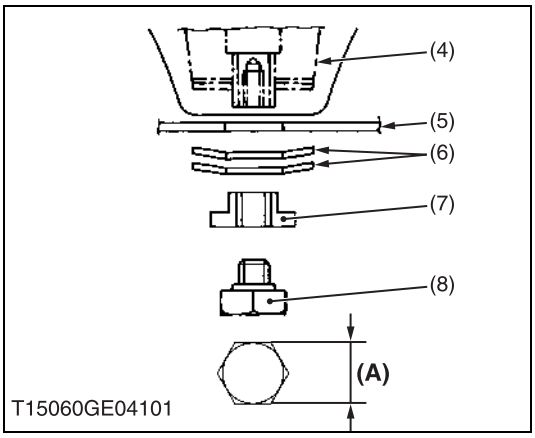


## Checking Mower Blade and Replacing Mower Blade

1. Check the cutting edge of mower blade.
2. Sharpen the cutting edges, if the mower blades are as shown in figure (2).
3. Replace the mower blades, if they are as shown in figure (3).

■ **NOTE**

- **To sharpen the mower blades by yourself, clamp the mower blade securely in a vise and use a large mill file along the original bevel.**
- **To balance the mower blade, place a small rod through the center hole and check to see if the blade balances evenly. File heavy side of the blade until it balance out even.**

4. Tilt up the mower deck.
5. Wedge a wooden block securely between the mower blade and mower deck or use a box wrench over the pulley nut to prevent the spindle from rotating while removing the blade bolts; then loosen the blade bolts.
6. Pass the spline boss through the blade (5) and 2 cup washers (6), and tighten the bolt (8).

■ **NOTE**

- **Make sure that the cup washer is not flattened out or worn; this cause blade to slip excessively.**
  **Replace the 2 cup washers if either is damaged.**

(1) New Blade
(2) Worn Blade
(3) Cracked Blade
(4) Spindle Holder
(5) Blade
(6) 2 Cup Washers
(7) Lock Washer
(8) Bolt
**(A) 30 mm (1-3/16 in.)**

W1022841

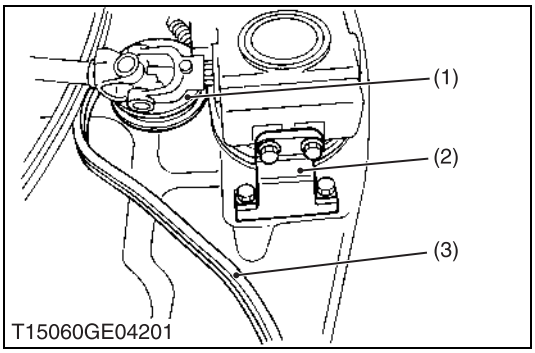


## Replacing Mower Belt

1. Remove the mower deck from the machine.
2. Remove the left and right hand shield from the mower deck.
3. Clean around the gear box.
4. Remove the belt from the tension pulley.
5. Remove the right hand bracket which mounts the gear box to the mower deck and slip the belt over the top of the gear box.
6. To install a new belt, reverse the above procedure.

| | | |
|---|---|---|
| Tightening torque | Bracket mounting screw | 27.6 to 90.2 N·m<br>8.0 to 9.2 kgf·m<br>57.1 to 66.5 ft-lbs |

(1) Tension Pulley
(2) Bracket (RH)
(3) Belt

W1069194

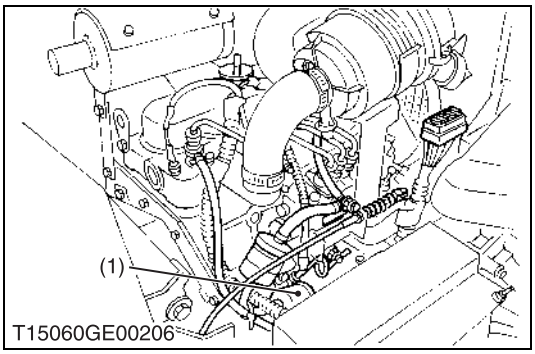


## Bleeding Fuel System

**Air must be removed:**

1. When the fuel filter or lines are removed.
2. When tank is completely empty.
3. After the tractor has not been used for a long period of time.

**Bleeding procedure is as follows:**

1. Fill the fuel tank with fuel.
2. Turn the key switch to **"ON"** position for about 30 seconds. Doing so allows fuel pump to work and pump air out of the fuel system.
3. Start the engine and run for about 30 seconds, and then stop the engine.

(1) Fuel Pump

W1069400

# 8. SPECIAL TOOLS

## [1] SPECIAL TOOLS FOR ENGINE

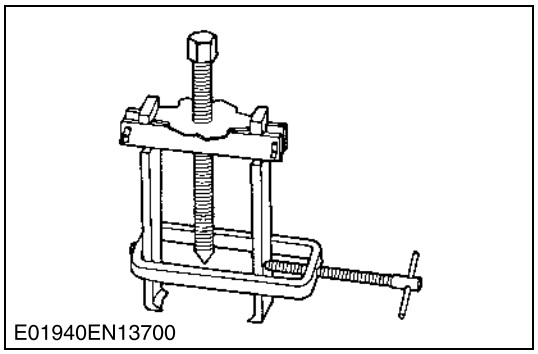
E01940EN13700

**Special Use Puller Set**

Code No: 07916-09032

Application: Use exclusively for pushing out bearing, gears and other parts with ease.

W1048293

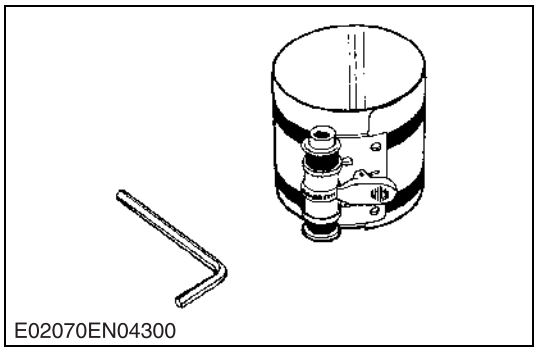
E02070EN04300

**Piston Ring Compressor**

Code No: 07909-32111

Application: Use exclusively for pushing in the piston with piston rings into the cylinder.

W1048361

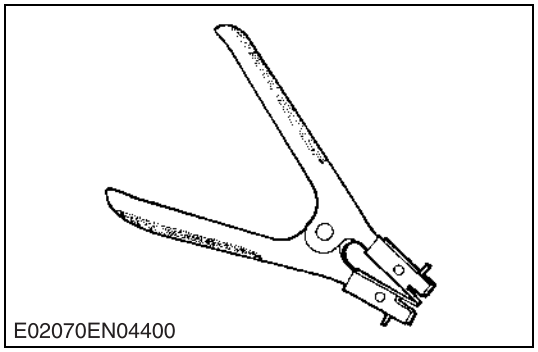
E02070EN04400

**Piston Ring Tool**

Code No: 07909-32121

Application: Use exclusively for removing or installing the piston ring with ease.

W1048421

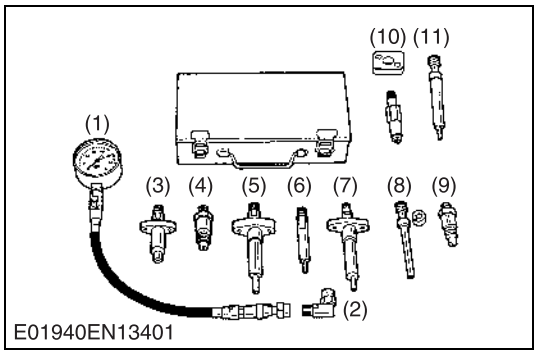

E01940EN13401

**Diesel Engine Compression Tester**

Code No: 07909-30208 (Assembly) 07909-31251 (G)
07909-30934 (A to F) 07909-31271 (I)
07909-31211 (E and F) 07909-31281 (J)
07909-31231 (H)

Application: Use to measure diesel engine compression and diagnostics of need for major overhaul.

(1) Gauge
(2) **L** Joint
(3) Adaptor **A**
(4) Adaptor **B**
(5) Adaptor **C**
(6) Adaptor **E**
(7) Adaptor **F**
(8) Adaptor **G**
(9) Adaptor **H**
(10) Adaptor **I**
(11) Adaptor **J**

W1048481

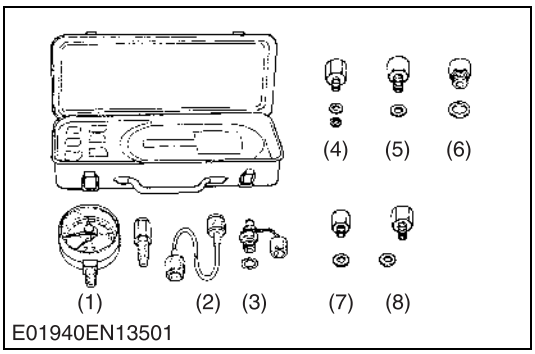


**Oil Pressure Tester**

Code No: 07916-32032
Application: Use to measure lubricating oil pressure.

(1) Gauge
(2) Cable
(3) Threaded Joint
(4) Adaptor 1
(5) Adaptor 2
(6) Adaptor 3
(7) Adaptor 4
(8) Adaptor 5

W1048722

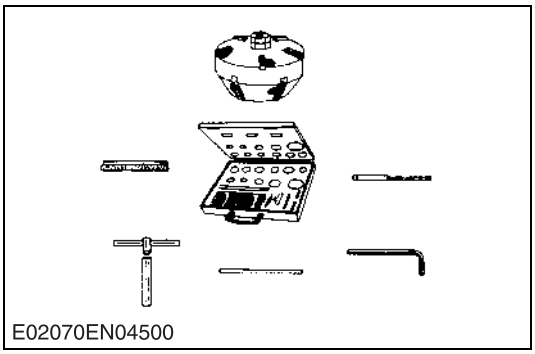


**Valve Seat Cutter**

Code No: 07909-33102
Application: Use to reseat valves.
Angle: 0.785 rad. (45 °)
0.262 rad. (15 °)
Diameter: 28.6 mm (1.126 in.)
31.6 mm (1.244 in.)
35.0 mm (1.378 in.)
38.0 mm (1.496 in.)
41.3 mm (1.626 in.)
50.8 mm (2.000 in.)

W1048944

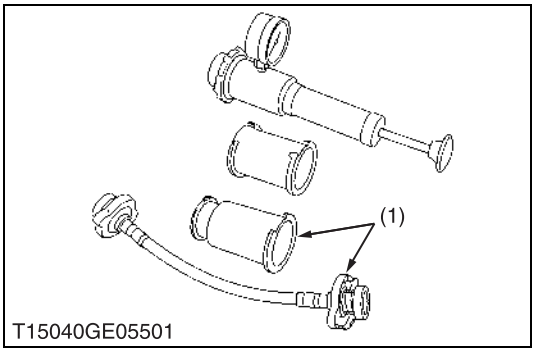


**Radiator Tester**

Code No: 07909-31551
Application: Use to check of radiator cap pressure, and leaks from cooling system.
Remarks: Adapter (1) BANZAI Code No. RCT-2A-30S

W1049045

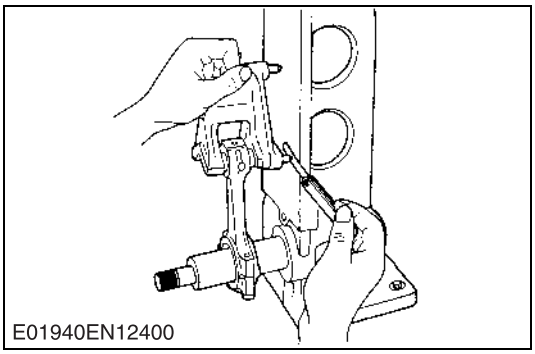


**Connecting Rod Alignment Tool**

Code No: 07909-31661
Application: Use to check the connecting rod alignment.
Applicable: Connecting rod big end I.D.
range 30 to 75 mm (1.18 to 2.95 in.) dia.
Connecting rod length
65 to 300 mm (2.57 to 11.81 in.)

W1049118

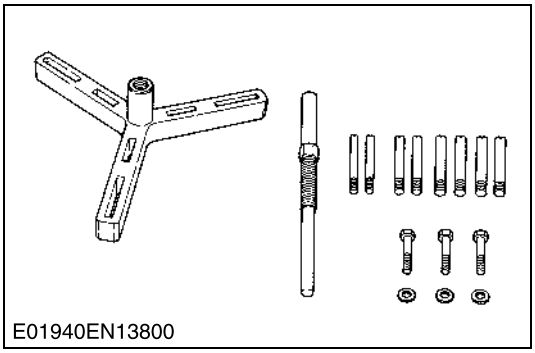


**Flywheel Puller**

Code No: 07916-32011
Application: Use exclusively for removing the flywheel with ease.

W1049723

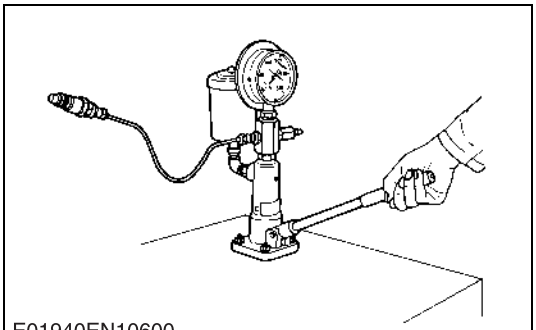
E01940EN10600

**Nozzle Tester**

Code No: 07909-31361
Application: Use to check the fuel injection pressure and spray pattern of nozzle.
Measuring range: 0 to 50 MPa (0 to 500 kgf/cm$^2$, 0 to 7000 psi)

W1049783

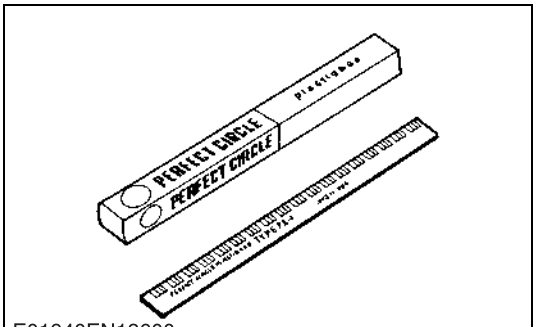

E01940EN13600

**Plastigage**

Code No: 07909-30241
Application: Use to check the oil clearance between crankshaft and bearing, etc..
Measuring range: Green.....0.025 to 0.076 mm (0.001 to 0.003 in.)
Red.....0.051 to 0.152 mm (0.002 to 0.006 in.)
Blue.....0.102 to 0.229 mm (0.004 to 0.009 in.)

W1049942

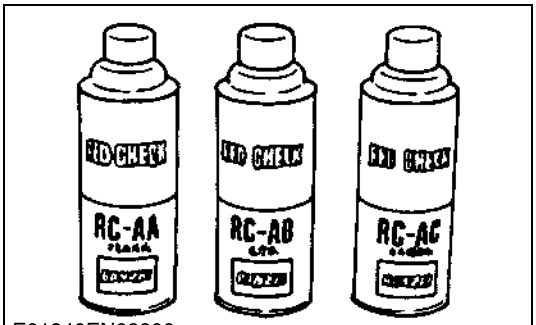

E01940EN08800

**Red Check**

Code No: 07909-31371
Application: Use to check cracks on cylinder head, cylinder block, etc..

W1050024

■ **NOTE**
- **The following special tools are not provided, so make them referring to the figure.**

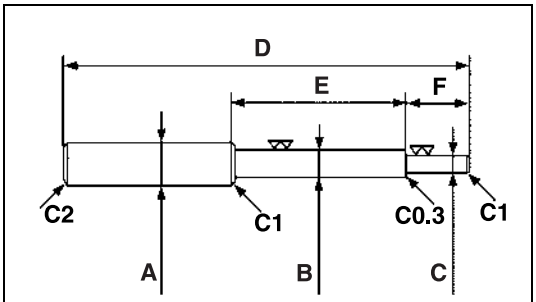

E01940EN14101

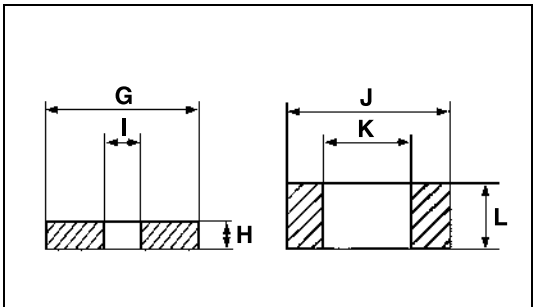

E01940EN14201

**Valve Guide Replacing Tool**

Application: Use to press out and press fit the valve guide.

| | |
|---|---|
| A | 20 mm dia. (0.79 in. dia.) |
| B | 9.96 to 9.98 mm dia. (0.3921 to 0.3929 in. dia.) |
| C | 5.5 to 5.7 mm dia. (0.2165 to 0.2244 in. dia.) |
| D | 200 mm (7.87 in.) |
| E | 80 mm (3.15 in.) |
| F | 40 mm (1.58 in.) |
| G | 15 mm (0.59 in.) |
| H | 5 mm (0.197 in.) |
| I | 6.0 to 6.1 mm dia. (0.236 to 0.240 in. dia.) |
| J | 18 mm dia. (0.71 in. dia.) |
| K | 10.6 to 10.7 mm dia. (0.417 to 0.421 in. dia.) |
| L | 7 mm (0.276 in.) |
| C1 | Chamfer 1.0 mm (0.039 in.) |
| C2 | Chamfer 2.0 mm (0.079 in.) |
| C0.3 | Chamfer 0.3 mm (0.012 in.) |

W1050106

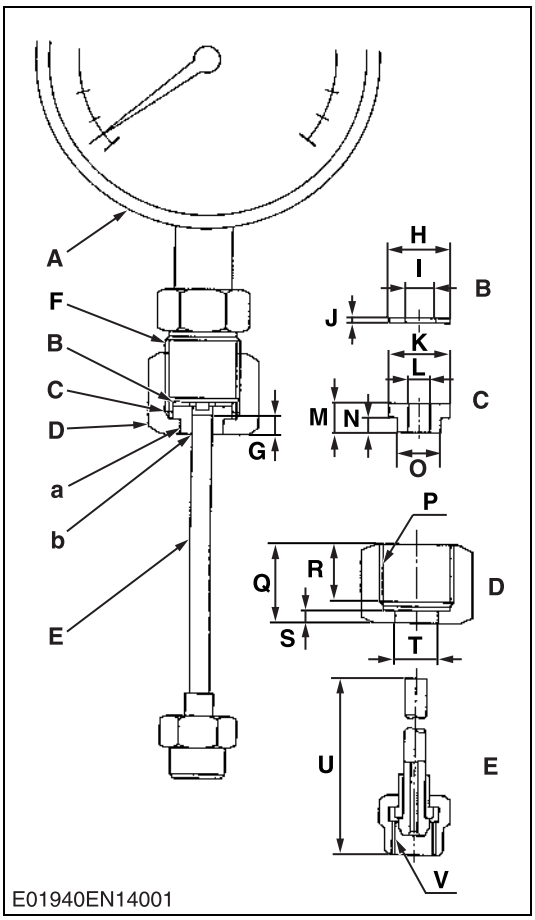


## Injection Pump Pressure Tester

Application: Use to check fuel tightness of injection pumps.

| | |
|---|---|
| A | Pressure gauge full scale: More than 29.4 MPa (300 kgf/cm$^2$, 4267 psi) |
| B | Copper gasket |
| C | Flange (Material: Steel) |
| D | Hex. nut 27 mm (1.06 in.) across the plat |
| E | Injection pipe |
| F | PF1/2 |
| G | 5 mm (0.20 in.) |
| H | 17 mm dia. (0.67 in. dia.) |
| I | 8 mm dia. (0.31 in. dia.) |
| J | 1.0 mm (0.039 in.) |
| K | 17 mm dia. (0.67 in. dia.) |
| L | 6.10 to 6.20 mm dia. (0.2402 to 0.2441 in. dia.) |
| M | 8 mm (0.31 in.) |
| N | 4 mm (0.16 in.) |
| O | 11.97 to 11.99 mm dia. (0.4713 to 0.4721 in. dia.) |
| P | PF1/2 |
| Q | 23 mm (0.91 in.) |
| R | 17 mm (0.67 in.) |
| S | 4 mm (0.16 in.) |
| T | 12.00 to 12.02 mm dia. (0.4724 to 0.4732 in. dia.) |
| U | 100 mm (3.94 in.) |
| V | M12 × P1.5 |
| a | Adhesive application |
| b | Fillet welding on the enter circumference |

W1050289

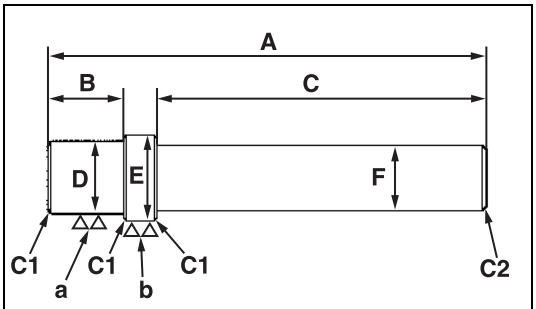

E01940EN14301

**Bushing Replacing Tool**

Application: Use to press out and to press fit the bushing.

1. For small end bushing

| | |
|---|---|
| A | 145 mm (5.71 in.) |
| B | 20 mm (0.79 in.) |
| C | 100 mm (3.94 in.) |
| D | 19.90 to 19.95 mm dia. (0.7835 to 0.7854 in. dia.) |
| E | 21.90 to 21.95 mm dia. (0.8622 to 0.8642 in. dia.) |
| F | 25 mm dia. (0.98 in. dia.) |
| a | 6.3 μ m (250 μ in.) |
| b | 6.3 μ m (250 μ in.) |

2. For idle gear bushing

| | |
|---|---|
| A | 150 mm (5.91 in.) |
| B | 20 mm (0.79 in.) |
| C | 100 mm (3.94 in.) |
| D | 19.90 to 19.95 mm (0.7835 to 0.7854 in.) |
| E | 21.90 to 21.95 mm (0.8622 to 0.8642 in.) |
| F | 25 mm (0.98 in.) |
| a | 6.3 μ m (250 μ in.) |
| b | 6.3 μ m (250 μ in.) |

W1050660

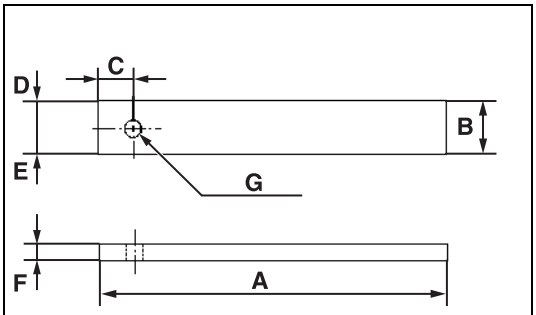

T12630GE04901

**Flywheel Stopper**

Application: Use to loosen and tighten the flywheel screw.

| | |
|---|---|
| A | 200 mm (7.87 in.) |
| B | 30 mm (1.18 in.) |
| C | 20 mm (0.79 in.) |
| D | 15 mm (0.59 in.) |
| E | 15 mm (0.59 in.) |
| G | 8 mm (0.31 in.) |
| F | 10 mm dia. (0.39 in. dia.) |

W1050819

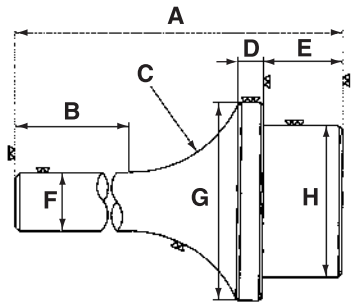

E01940EN14401

## Crankshaft Bearing 1 Replacing Tool

Application: Use to press out and to press fit the crankshaft bearing 1.

### [Press Out]

| | |
|---|---|
| A | 135 mm (5.31 in.) |
| B | 72 mm (2.83 in.) |
| C | 1.57 rad. (40°) |
| D | 10 mm (0.39 in.) |
| E | 22 mm (0.87 in.) |
| F | 20 mm dia. (0.79 in. dia.) |
| G | 48.90 to 48.95 mm dia. (1.9251 to 1.9271 in. dia.) |
| H | 43.90 to 43.95 mm dia. (1.7283 to 1.7303 in. dia.) |

### [Press Fit]

| | |
|---|---|
| A | 130 mm (5.12 in.) |
| B | 72 mm (2.83 in.) |
| C | 1.57 rad. (40°) |
| D | 9 mm (0.35 in.) |
| E | 24 mm (0.95 in.) |
| F | 20 mm dia. (0.79 in. dia.) |
| G | 68 mm dia. (0.79 in. dia.) |
| H | 39.90 to 39.95 mm dia. (1.5709 to 1.5728 in. dia.) |

W1051113

# [2] SPECIAL TOOLS FOR MACHINE

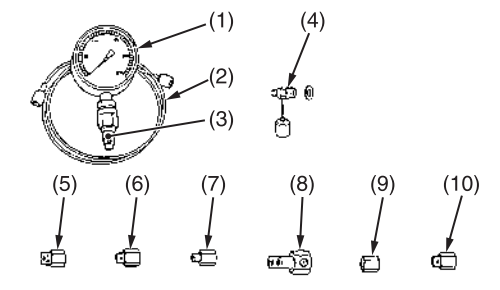


T12630GE05701

**Relief Valve Pressure Tester**

Code No: 07916-50045

Application: This allows easy measurement of relief set pressure.

(1) Gauge (07916-50322)
(2) Cable (07916-50331)
(3) Threaded Joint (07916-50401)
(4) Threaded Joint (07916-50341)
(5) Adaptor **B** (M18 × P1.5) (07916-50361)
(6) Adaptor **C** (PS3/8) (07916-50371)
(7) Adaptor **D** (PT1/8) (07916-50381)
(8) Adaptor **E** (PS3/8) (07916-50392)
(9) Adaptor **F** (PF1/2) (07916-62601)
(10) Adaptor **58** (PT1/4) (07916-52391)

W1051907

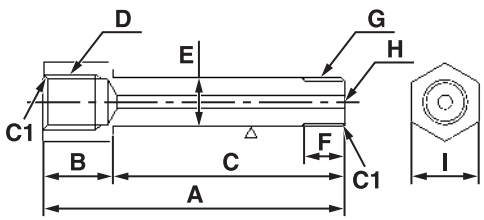


T15061GE01501

**HST Relief Valve Adaptor**

Application: This adaptor is used to measure the HST relief valve pressure.

| | |
|---|---|
| A | 80 mm (3.15 in.) |
| B | 20 mm (0.79 in.) |
| C | 60 mm (2.36 in.) |
| D | G 1/4 × 15 mm (0.59 in.) |
| E | 12 mm (0.47 in.) |
| F | 13 mm dia. (0.51 in. dia.) |
| G | G 1/4 |
| H | 3 mm dia. (0.118 in. dia.) |
| I | 19 mm (0.75 in.) |
| C1 | Chamfer 1.0 mm (0.039 in.) |

W1040355

# 1 ENGINE

# NOTICE

Regarding engine mechanism information, please refer ENGINE MECHANISM WSM (Code No. 97897-01872).

# SERVICING

## CONTENTS

# 1. TROUBLESHOOTING

| Symptom | Probable Cause | Solution | Reference Page |
|---|---|---|---|
| **Engine Does Not Start** | • No fuel | Replenish fuel | – |
| | • Air in the fuel system | Bleed fuel system | – |
| | • Water in the fuel system | Change fuel and replace fuel system | – |
| | • Fuel pipe clogged | Clean fuel pipe | – |
| | • Fuel filter clogged | Replace fuel filter | G-32 |
| | • Excessively high viscosity of fuel or engine oil at low temperature | Use specified fuel or engine oil | G-7 |
| | • Fuel with low cetane number | Use specified fuel | G-7 |
| | • Fuel leak due to loose injection pipe retaining nut | Tighten retaining nut | 1-S28 |
| | • Incorrect injection timing | Adjust injection timing | 1-S73 |
| | • Fuel camshaft worn | Replace fuel camshaft | 1-S33, S35 |
| | • Injection nozzle clogged | Clean injection nozzle | 1-S75 |
| | • Injection pump malfunctioning | Repair or replace injection pump | 1-S31, S35 |
| | • Seizure of crankshaft, camshaft, piston, cylinder or bearing | Replace crankshaft, camshaft, piston, cylinder or bearing | 1-S37, 38, S42 |
| | • Compression leak from cylinder | Replace head gasket, tighten cylinder head screw, glow plug and nozzle holder | 1-S28, S30 |
| | • Improper valve timing | Correct valve timing | 1-S27 |
| | • Piston ring and cylinder worn | Replace piston ring | 1-S40 |
| | • Excessive valve clearance | Adjust valve clearance | 1-S27 |
| **(Starter Does Not Run)** | • Battery discharged | Charge battery | G-26 |
| | • Starter malfunctioning | Repair or replace starter | 5-S12 |
| | • Slow blow fuse blown | Replace slow blow fuse | G-36 |
| | • Main switch malfunctioning | Repair or replace main switch | 5-S8 |
| | • PTO switch defective | Replace PTO switch | 5-S10 |
| | • Parking brake switch defective | Replace brake switch | 5-S10 |
| | • Motion control lever switch defective | Replace reverse switch or adjust reverse switch gap | 5-S10 |
| | • Seat switch defective | Replace seat switch | 5-S10 |
| | • Wiring harness disconnected | Connect wiring harness | – |

W1066187

| Symptom | Probable Cause | Solution | Reference Page |
|---|---|---|---|
| **Engine Revolution Is Not Smooth** | • Fuel filter clogged or dirty | Replace fuel filter | G-32 |
| | • Air cleaner clogged | Clean or replace air cleaner element. | G-25 |
| | • Fuel leak due to loose injection pipe retaining nut | Tighten retaining nut | 1-S28 |
| | • Injection pump malfunctioning | Repair or replace injection pump | 1-S31, S35 |
| | • Incorrect nozzle injection pressure | Adjust nozzle injection pressure | 1-S75 |
| | • Injection nozzle stuck or clogged | Repair or replace injection nozzle | 1-S28, S75 |
| | • Governor malfunctioning | Repair governor | 1-S31, S34 |
| **Either White or Blue Exhaust Gas Is Observed** | • Excessive engine oil | Reduce to specified engine oil level | – |
| | • Piston ring and cylinder worn or stock | Repair piston ring and bore oversize piston | 1-S40 |
| | • Incorrect injection timing | Adjust injection timing | 1-S73 |
| | • Deficient compression | Replace each bearings | 1-S56, S59 |
| **Either Black or Dark Gray Exhaust Gas Is Observed** | • Overload | Lessen load | – |
| | • Low grade fuel used | Use specified fuel | – |
| | • Fuel filter clogged | Replace fuel filter | G-32 |
| | • Air cleaner clogged | Clean or replace air cleaner element | G-25 |
| | • Deficient nozzle injection | Repair or replace nozzle | 1-S28, S75 |
| **Deficient Output** | • Incorrect injection timing | Adjust injection timing | 1-S73 |
| | • Engine's moving parts seem to be seized. | Repair or replace engine’s moving parts | – |
| | • Uneven fuel injection | Repair or replace injection pump | 1-S31, S35 |
| | • Deficient nozzle injection | Repair or replace nozzle | 1-S28, S75 |
| | • Compression leak from cylinder | Replace head gasket, tighten cylinder head screws, glow plugs and nozzle holders. | 1-S28, S30 |
| **Excessive Lubricant Oil Consumption** | • Piston ring’s gap facing the same direction | Shift ring gap direction | 1-S40 |
| | • Oil ring worn or stuck | Replace oil ring | 1-S40 |
| | • Piston ring groove worn | Replace piston | 1-S40 |
| | • Valve stem and valve guide worn | Replace valve and valve guide | 1-S45 |
| | • Oil leaking due to defective seals or packing | Replace defective seals or packing | – |

W1010717

| Symptom | Probable Cause | Solution | Reference Page |
|---|---|---|---|
| **Fuel Mixed into Lubricant Oil** | • Injection pump's plunger worn | Replace pump element or injection pump | 1-S31, S35 |
| | • Deficient nozzle injection | Repair or replace nozzle | 1-S28, S75 |
| | • Injection pump broken | Replace injection pump | 1-S31, S35 |
| **Water Mixed into Lubricant Oil** | • Head gasket defective | Replace head gasket | 1-S28, S30 |
| | • Cylinder block or cylinder head flawed | Replace cylinder block or cylinder head | – |
| **Low Oil Pressure** | • Engine oil insufficient | Replenish engine oil | G-16 |
| | • Oil strainer clogged | Clean oil strainer | G-19 |
| | • Engine oil filter cartridge clogged | Change engine oil filter cartridge | G-17 |
| | • Relief valve stuck with dirt | Clean or replace relief valve | – |
| | • Relief valve spring weaken or broken | Replace relief valve spring | – |
| | • Excessive oil clearance of crankshaft bearing | Replace main bearings, metals or crankshaft | 1-S64 |
| | • Excessive oil clearance of crankpin bearing | Replace crankpin bearings | 1-S59 |
| | • Excessive oil clearance of rocker arm | Replace rocker arms, rocker arm brackets or rocker arm shaft. | 1-S29 |
| | • Oil passage clogged | Clean oil passage | – |
| | • Different type of oil | Use specified type of oil | – |
| | • Oil pump defective | Repair or replace oil pump | 1-S33, S34 |
| **High Oil Pressure** | • Different type of oil | Use specified type of oil | G-7 |
| | • Relief valve defective | Replace relief valve | – |

W1012734

| Symptom | Probable Cause | Solution | Reference Page |
|---|---|---|---|
| **Engine Overheated** | • Engine oil insufficient | Replenish engine oil | G-16 |
| | • Fan belt broken or tensioned improperly | Replace fan belt or adjust fan belt tension | G-27, 1-S46 |
| | • Coolant insufficient | Replenish coolant | – |
| | • Radiator net and radiator fin clogged with dust | Clean radiator net and radiator fin | – |
| | • Inside of radiator corroded | Clean inside of radiator or replace radiator | G-33 |
| | • Coolant flow route corroded | Clean or replace coolant flow route | G-33 |
| | • Radiator cap defective | Replace radiator cap | 1-S71 |
| | • Overload running | Loosen load | – |
| | • Head gasket defective | Replace head gasket | 1-S30 |
| | • Incorrect injection timing | Adjust injection timing | 1-S73 |
| | • Unsuitable fuel used | Use specified fuel | – |

W1013908

# 2. SERVICING SPECIFICATIONS [D722-E-XFM5, D782-E-XFM5]

## [1] ENGINE BODY

| Item | | Factory Specification | Allowable Limit |
|---|---|---|---|
| Cylinder Head Surface | Flatness | – | 0.05 mm<br>0.0020 in. |
| Top Clearance | | 0.50 to 0.70 mm<br>0.0197 to 0.0276 in. | – |
| Compression Pressure | | 2.84 to 3.24 MPa<br>29.0 to 33.0 kgf/cm$^2$<br>412 to 469 psi | 2.26 MPa<br>23.0 kgf/cm$^2$<br>327 psi |
| Variance among Cylinders | | – | 10 % or less |
| Valve Clearance (Cold) | | 0.145 to 0.185 mm<br>0.00571 to 0.00728 in. | – |
| Valve Seat | Width | 2.12 mm<br>0.0835 in. | – |
| Valve Seat | Angle | 0.79 rad.<br>45° | – |
| Valve Face | Angle | 0.79 rad.<br>45° | – |
| Valve Recessing | | – 0.10 to 0.10 mm<br>– 0.0039 to 0.0039 in. | 0.3 mm<br>0.0118 in. |
| Valve Stem to Valve Guide | Clearance | 0.030 to 0.057 mm<br>0.00118 to 0.00224 in. | 0.10 mm<br>0.0039 in. |
| Valve Stem | O.D. | 5.968 to 5.980 mm<br>0.23496 to 0.23543 in. | – |
| Valve Guide | I.D. | 6.010 to 6.025 mm<br>0.23661 to 0.23720 in. | – |
| Valve Timing (Intake Valve) | Open | 0.35 rad. (20°)<br>before T.D.C. | – |
| | Close | 0.79 rad. (45°)<br>after B.D.C. | – |
| Valve Timing (Exhaust Valve) | Open | 0.89 rad. (50°)<br>before B.D.C. | – |
| | Close | 0.26 rad. (15°)<br>after T.D.C. | – |

W1013874

**ENGINE BODY (Continued)**

| Item | | Factory Specification | Allowable Limit |
|---|---|---|---|
| Valve Spring | Free Length | 31.3 to 31.8 mm<br>1.232 to 1.252 in. | 28.4 mm<br>1.118 in. |
| | Setting Load | 64.7 N<br>6.6 kgf<br>14.6 lbs | 54.9 N<br>5.6 kgf<br>12.3 lbs |
| | Setting Length | 27.0 mm<br>1.063 in. | 27.0 mm<br>1.063 in. |
| | Tilt | – | 1.2 mm<br>0.047 in. |
| Rocker Arm Shaft to Rocker Arm | Clearance | 0.016 to 0.045 mm<br>0.00063 to 0.00177 in. | 0.15 mm<br>0.0059 in. |
| Rocker Arm Shaft | O.D. | 10.473 to 10.484 mm<br>0.41232 to 0.41276 in. | – |
| Rocker Arm | I.D. | 10.500 to 10.518 mm<br>0.41339 to 0.41410 in. | – |
| Push Rod | Alignment | – | 0.25 mm<br>0.0098 in. |
| Tappet to Guide | Clearance | 0.016 to 0.052 mm<br>0.00063 to 0.00205 in. | 0.10 mm<br>0.0039 in. |
| Tappet | O.D. | 17.966 to 17.984 mm<br>0.70732 to 0.70803 in. | – |
| Tappet Guide | I.D. | 18.000 to 18.018 mm<br>0.70866 to 0.70937 in. | – |
| Camshaft | Side Clearance | 0.15 to 0.31 mm<br>0.0059 to 0.0122 in. | 0.50 mm<br>0.0197 in. |
| Camshaft | Alignment | – | 0.01 mm<br>0.0004 in. |
| Cam Height | Intake and Exhaust | 26.88 mm<br>1.0583 in. | 26.83 mm<br>1.0563 in. |
| Camshaft | Oil Clearance | 0.050 to 0.091 mm<br>0.00197 to 0.00358 in. | 0.15 mm<br>0.0059 in. |
| Camshaft Journal | O.D. | 32.934 to 32.950 mm<br>1.29661 to 1.29724 in. | – |
| Camshaft Bearing | I.D. | 33.000 to 33.025 mm<br>1.29921 to 1.30020 in. | – |

W1014987

**ENGINE BODY (Continued)**

| Item | | Factory Specification | Allowable Limit |
|---|---|---|---|
| Timing Gear | | | |
| Crank Gear to Idle Gear | Backlash | 0.043 to 0.124 mm<br>0.00169 to 0.00488 in. | 0.15 mm<br>0.0059 in. |
| Idle Gear to Cam Gear | Backlash | 0.047 to 0.123 mm<br>0.00185 to 0.00484 in. | 0.15 mm<br>0.0059 in. |
| Idle Gear to Injection Pump Gear | Backlash | 0.046 to 0.124 mm<br>0.00185 to 0.00488 in. | 0.15 mm<br>0.0059 in. |
| Crank Gear to Oil Pump Drive Gear | Backlash | 0.041 to 0.123 mm<br>0.00161 to 0.00484 in. | 0.15 mm<br>0.0059 in. |
| Idle Gear Shaft to Idle Gear Bushing | Clearance | 0.020 to 0.084 mm<br>0.00079 to 0.00331 in. | 0.10 mm<br>0.0039 in. |
| Idle Gear Shaft | O.D. | 19.967 to 19.980 mm<br>0.78610 to 0.78661 in. | – |
| Idle Gear Bushing | I.D. | 20.000 to 20.051 mm<br>0.78740 to 0.78941 in. | – |
| Idle Gear | Side Clearance | 0.13 to 0.49 mm<br>0.0051 to 0.0193 in. | 0.60 mm<br>0.0236 in. |
| Piston Pin Bore | I.D. | 20.000 to 20.013 mm<br>0.78740 to 0.78791 in. | 20.05 mm<br>0.7894 in. |
| Piston Ring Clearance | Second Ring | 0.090 to 0.120 mm<br>0.00354 to 0.00472 in. | 0.15 mm<br>0.0059 in. |
| | Oil Ring | 0.04 to 0.08 mm<br>0.0016 to 0.0031 in. | 0.15 mm<br>0.0059 in. |
| Piston Ring Gap | Top Ring and Second Ring | 0.25 to 0.40 mm<br>0.0059 to 0.0118 in. | 1.25 mm<br>0.0492 in. |
| | Oil Ring | 0.15 to 0.30 mm<br>0.0118 to 0.0177 in. | 1.25 mm<br>0.0492 in. |
| Connecting Rod | Alignment | – | 0.05 mm<br>0.0020 in. |
| Piston Pin to Small End Bushing | Clearance | 0.014 to 0.038 mm<br>0.00055 to 0.00150 in. | 0.10 mm<br>0.0039 in. |
| Piston Pin | O.D. | 20.002 to 20.011 mm<br>0.78748 to 0.78783 in. | – |
| Small End Bushing | I.D. | 20.025 to 20.040 mm<br>0.78839 to 0.78897 in. | – |

W1013874

**ENGINE BODY (Continued)**

| Item | | Factory Specification | Allowable Limit |
|---|---|---|---|
| Crankshaft | Alignment | – | 0.02 mm<br>0.0008 in. |
| Crankshaft Journal to Crankshaft Bearing 1 | Oil Clearance | 0.034 to 0.106 mm<br>0.00134 to 0.00417 in. | 0.20 mm<br>0.0079 in. |
| Crankshaft Journal | O.D. | 39.934 to 39.950 mm<br>1.57221 to 1.57284 in. | – |
| Crankshaft Bearing 1 | I.D. | 39.984 to 40.040 mm<br>1.57417 to 1.57638 in. | – |
| Crankshaft Journal to Crankshaft Bearing 2 (Flywheel Side) | Oil Clearance | 0.028 to 0.059 mm<br>0.00110 to 0.00232 in. | 0.20 mm<br>0.0079 in. |
| Crankshaft Journal | O.D. | 43.978 to 43.993 mm<br>1.73142 to 1.73201 in. | – |
| Crankshaft Bearing 2 | I.D. | 43.984 to 44.026 mm<br>1.73165 to 1.73331 in. | – |
| Crankshaft Journal to Crankshaft Bearing 3 (Intermediate) | Oil Clearance | 0.028 to 0.059 mm<br>0.00110 to 0.00232 in. | 0.20 mm<br>0.0079 in. |
| Crankshaft Journal | O.D. | 39.934 to 39.950 mm<br>1.57221 to 1.57284 in. | – |
| Crank bearing 3 | I.D. | 39.978 to 39.993 mm<br>1.57394 to 1.57453 in. | – |
| Crankpin and Crankpin Bearing | Oil Clearance | 0.020 to 0.051 mm<br>0.00079 to 0.00201 in. | 0.15 mm<br>0.0059 in. |
| Crankpin | O.D. | 33.959 to 33.975 mm<br>1.33697 to 1.33760 in. | – |
| Crankpin Bearing | I.D. | 33.995 to 34.010 mm<br>1.33839 to 1.33898 in. | – |
| Crankshaft (D722) | Side Clearance | 0.15 to 0.25 mm<br>0.0059 to 0.0098 in. | 0.50 mm<br>0.0197 in. |
| Crankshaft (D782) | Side Clearance | 0.15 to 0.31 mm<br>0.0059 to 0.0122 in. | 0.50 mm<br>0.0197 in. |
| Cylinder Liner | I.D. | 67.000 to 67.019 mm<br>2.63779 to 2.63854 in. | 67.169 mm<br>2.64444 in. |
| Cylinder<br>[Oversize: 0.25 mm (0.0098 in.)] | I.D. | 67.250 to 67.269 mm<br>2.64764 to 2.64839 in. | 67.419 mm<br>2.70739 in. |

W1017094

## [2] LUBRICATING SYSTEM

| Item | | Factory Specification | Allowable Limit |
|---|---|---|---|
| Engine Oil Pressure | At Idle Speed | More than 49 kPa<br>0.5 kgf/cm$^2$<br>7 psi | – |
| | At Rated Speed | 196 to 441 kPa<br>2.0 to 4.5 kgf/cm$^2$<br>28 to 64 psi | 147 kPa<br>1.5 kgf/cm$^2$<br>27 psi |
| Inner Rotor to Outer Rotor | Clearance | 0.03 to 0.14 mm<br>0.0012 to 0.0055 in. | – |
| Outer Rotor to Pump Body | Clearance | 0.07 to 0.15 mm<br>0.0028 to 0.0059 in. | – |
| Inner Rotor to Cover | End Clearance | 0.075 to 0.135 mm<br>0.00295 to 0.00531 in. | – |

W1017384

## [3] COOLING SYSTEM

| | | | |
|---|---|---|---|
| Thermostat | Valve Opening Temperature (At Beginning) | 80.5 to 83.5 °C<br>176.9 to 182.3 °F | – |
| | Valve Opening Temperature (Opened Completely) | 95 °C<br>203 °F | – |
| Radiator | Water Tightness | Water tightness at specified pressure<br>137 kPa<br>1.4 kgf/cm$^2$, 20 psi | – |
| Radiator Cap | Air Leakage | 10 seconds or more<br>88 → 59 kPa<br>0.9 → 0.6 kgf/cm$^2$<br>13 → 9 psi | – |
| Fan Belt | Tension | Approx. 10 mm (0.4 in.) deflection at 98 N (10 kgf, 22 lbs) of force | – |

W1017547

# [4] FUEL SYSTEM

| Item | | Factory Specification | Allowable Limit |
|---|---|---|---|
| Injection Pump | Injection Timing | 0.33 to 0.37 rad.<br>19.0 to 21.0°<br>before T.D.C. | – |
| Pump Element | Fuel Tightness | – | 14.7 MPa<br>150 kgf/cm$^2$<br>2130 psi |
| Delivery Valve | Fuel Tightness | – | 5 seconds<br>14.7 → 13.7 MPa<br>150 →140 kgf/cm$^2$<br>2130 → 1990 psi |
| Fuel Injection Nozzle | Injection Pressure | 13.7 to 14.7 MPa<br>140 to 150 kgf/cm$^2$<br>1990 to 2130 psi | – |
| Nozzle Valve Seat | Fuel Tightness | When the pressure is 12.7 MPa (130 kgf/cm$^2$, 1850 psi), the valve seat must be fuel tightness. | – |

W1013874

# 3. SERVICING SPECIFICATIONS [D1105-E-ZD]

## [1] ENGINE BODY

| Item | | Factory Specification | Allowable Limit |
|---|---|---|---|
| Cylinder Head Surface | Flatness | – | 0.05 mm<br>0.0020 in. |
| Top Clearance | | 0.55 to 0.70 mm<br>0.0217 to 0.0276 in. | – |
| Compression Pressure (When Cranking with Starting Motor) | | 2.84 to 3.24 MPa<br>29 to 33 kgf/cm$^2$<br>412 to 469 psi | 2.26 MPa<br>23 kgf/cm$^2$<br>327 psi |
| Variance among Cylinders | | – | 10 % or less |
| Valve Clearance (Cold) | | 0.145 to 0.185 mm<br>0.0057 to 0.0072 in. | – |
| Valve Seat | Width | 2.12 mm<br>0.0835 in. | – |
| Valve Seat | Angle (Intake) | 1.047 rad.<br>60° | – |
| | Angle (Exhaust) | 0.785 rad.<br>45° | – |
| Valve Face | Angle (Intake) | 1.047 rad.<br>60° | – |
| | Angle (Exhaust) | 0.785 rad.<br>45° | – |
| Valve Recessing | | – 0.05 to 0.15 mm<br>– 0.0020 to 0.0059 in. | 0.40 mm<br>0.0157 in. |
| Valve Stem to Valve Guide | Clearance | 0.035 to 0.065 mm<br>0.0014 to 0.0026 in. | 0.10 mm<br>0.0039 in. |
| Valve Stem | O.D. | 6.960 to 6.975 mm<br>0.2740 to 0.2746 in. | – |
| Valve Guide | I.D. | 7.010 to 7.025 mm<br>0.27599 to 0.27657 in. | – |
| Valve Timing (Intake Valve) | Open | 0.24 rad. (14°)<br>before T.D.C. | – |
| | Close | 0.52 rad. (30°)<br>after B.D.C. | – |
| Valve Timing (Exhaust Valve) | Open | 0.96 rad. (55°)<br>before B.D.C. | – |
| | Close | 0.24 rad. (14°)<br>after T.D.C. | – |

W1015702

**ENGINE BODY (Continued)**

| Item | | Factory Specification | Allowable Limit |
|---|---|---|---|
| Valve Spring | Free Length | 37.0 to 37.5 mm<br>1.457 to 1.476 in. | 36.5 mm<br>1.437 in. |
| | Setting Load | 117.6 N<br>12.0 kgf<br>26.4 lbs | 100.0 N<br>10.2 kgf<br>22.5 lbs |
| | Setting Length | 31.0 mm<br>1.220 in. | – |
| | Tilt | – | 1.0 mm<br>0.039 in. |
| Rocker Arm Shaft to Rocker Arm | Clearance | 0.016 to 0.045 mm<br>0.0006 to 0.0018 in. | 0.10 mm<br>0.0039 in. |
| Rocker Arm Shaft | O.D. | 11.973 to 11.984 mm<br>0.4714 to 0.4718 in. | – |
| Rocker Arm | I.D. | 12.000 to 12.018 mm<br>0.4724 to 0.4732 in. | – |
| Push Rod | Alignment | – | 0.25 mm<br>0.0098 in. |
| Tappet to Tappet Guide | Clearance | 0.020 to 0.062 mm<br>0.00079 to 0.00244 in. | 0.07 mm<br>0.0028 in. |
| Tappet | O.D. | 19.959 to 19.980 mm<br>0.78579 to 0.78661 in. | – |
| Tappet Guide | I.D. | 20.000 to 20.021 mm<br>0.78740 to 0.78823 in. | – |
| Camshaft | Side Clearance | 0.07 to 0.22 mm<br>0.0028 to 0.0087 in. | 0.30 mm<br>0.0118 in. |
| Camshaft | Alignment | – | 0.01 mm<br>0.0004 in. |
| Cam Height | Intake | 28.80 mm<br>1.1339 in. | 28.75 mm<br>1.1319 in. |
| | Exhaust | 29.00 mm<br>1.1417 in. | 28.95 mm<br>1.1398 in. |
| Camshaft Journal to Cylinder Block Bore | Oil Clearance | 0.05 to 0.09 mm<br>0.0020 to 0.0036 in. | 0.15 mm<br>0.0059 in. |
| Camshaft Journal | O.D. | 35.934 to 35.950 mm<br>1.4147 to 1.4154 in. | – |
| Cylinder Block Bore | I.D. | 36.000 to 36.025 mm<br>1.4173 to 1.4183 in. | – |

W1016974

**ENGINE BODY (Continued)**

| Item | | Factory Specification | Allowable Limit |
|---|---|---|---|
| Timing Gear | | | |
| Crank Gear to Idle Gear | Backlash | 0.032 to 0.115 mm<br>0.0013 to 0.0045 in. | 0.15 mm<br>0.0059 in. |
| Idle Gear to Cam Gear | Backlash | 0.036 to 0.114 mm<br>0.0014 to 0.0045 in. | 0.15 mm<br>0.0059 in. |
| Idle Gear to Injection Pump Gear | Backlash | 0.034 to 0.116 mm<br>0.0013 to 0.0046 in. | 0.15 mm<br>0.0059 in. |
| Injection Pump Gear to Governor Gear | Backlash | 0.032 to 0.118 mm<br>0.0013 to 0.0046 in. | 0.15 mm<br>0.0059 in. |
| Idle Gear | Side Clearance | 0.20 to 0.51 mm<br>0.0079 to 0.0200 in. | 0.8 mm<br>0.0315 in. |
| Idle Gear Shaft to Gear Bushing | Clearance | 0.020 to 0.054 mm<br>0.0008 to 0.0021 in. | 0.10 mm<br>0.0039 in. |
| Idle Gear Shaft | O.D. | 25.967 to 25.980 mm<br>1.0223 to 1.0228 in. | – |
| Gear Bushing | I.D. | 26.000 to 26.021 mm<br>1.0236 to 1.0244 in. | – |
| Piston Pin Bore | I.D. | 22.000 to 22.013 mm<br>0.8661 to 0.8667 in. | 22.05 mm<br>0.8681 in. |
| Piston Ring Clearance | Second Ring | 0.095 to 0.112 mm<br>0.0037 to 0.0044 in | 0.20 mm<br>0.0079 in. |
| | Oil Ring | 0.02 to 0.06 mm<br>0.0008 to 0.0022 in. | 0.15 mm<br>0.0059 in. |
| Ring Gap | Top Ring and Second Ring | 0.30 to 0.45 mm<br>0.0118 to 0.0177 in. | 1.25 mm<br>0.0492 in. |
| | Oil Ring | 0.25 to 0.40 mm<br>0.0098 to 0.0157 in. | 1.25 mm<br>0.0492 in. |
| Connecting Rod | Alignment | – | 0.05 mm<br>0.0020 in. |
| Piston Pin to Small End Bushing | Clearance | 0.014 to 0.038 mm<br>0.00055 to 0.00150 in. | 0.15 mm<br>0.0059 in. |
| Piston Pin | O.D. | 22.002 to 22.011 mm<br>0.86622 to 0.86657 in. | – |
| Small End Bushing | I.D. | 22.025 to 22.040 mm<br>0.86713 to 0.86771 in. | – |
| Crankshaft | Alignment | – | 0.02 mm<br>0.0008 in. |

W1019055

**ENGINE BODY (Continued)**

| Item | | Factory Specification | Allowable Limit |
|---|---|---|---|
| Crankshaft Journal to Crankshaft Bearing 1 | Oil Clearance | 0.034 to 0.114 mm<br>0.00134 to 0.00449 in. | 0.20 mm<br>0.0079 in. |
| Crankshaft Journal | O.D. | 47.934 to 47.950 mm<br>1.88717 to 1.88779 in. | – |
| Crankshaft Bearing 1 | I.D. | 47.984 to 48.048 mm<br>1.88913 to 1.89165 in. | – |
| Crankshaft Journal to Crankshaft Bearing 2 | Oil Clearance | 0.034 to 0.095 mm<br>0.00134 to 0.00374 in. | 0.20 mm<br>0.0079 in. |
| Crankshaft Journal | O.D. | 47.934 to 47.950 mm<br>1.88716 to 1.88779 in. | – |
| Crankshaft Bearing 2 | I.D. | 47.984 to 48.029 mm<br>1.88913 to 1.89091 in. | – |
| Crankpin to Crankpin Bearing | Oil Clearance | 0.029 to 0.091 mm<br>0.00114 to 0.00358 in. | 0.20 mm<br>0.0079 in. |
| Crankpin | O.D. | 39.959 to 39.975 mm<br>1.57319 to 1.57382 in. | – |
| Crankpin Bearing | I.D. | 40.004 to 40.050 mm<br>1.57496 to 1.57677 in. | – |
| Crankshaft Journal to Crankshaft Bearing 3 | Oil Clearance | 0.034 to 0.098 mm<br>0.00134 to 0.00386 in. | 0.20 mm<br>0.0079 in. |
| Crankshaft Journal | O.D. | 51.921 to 51.940 mm<br>2.04413 to 2.04488 in. | – |
| Crankshaft Bearing 3 | I.D. | 51.974 to 52.019 mm<br>2.04622 to 2.04799 in. | – |
| Crankshaft | Side Clearance | 0.15 to 0.31 mm<br>0.0059 to 0.0122 in. | 0.50 mm<br>0.0197 in. |
| Cylinder<br>[Standard] | I.D. | 78.000 to 78.019 mm<br>3.0709 to 3.716 in. | 78.150 mm<br>3.0768 in. |
| Cylinder<br>[Oversize: 0.5 mm (0.0197 in.)] | I.D. | 78.500 to 78.519 mm<br>3.0906 to 3.0912 in. | 78.319 mm<br>3.0834 in. |

W1022700

## [2] LUBRICATING SYSTEM

| Item | | Factory Specification | Allowable Limit |
|---|---|---|---|
| Engine Oil Pressure | At Idle Speed | More than 49 kPa<br>0.5 kgf/cm$^2$<br>7 psi | – |
| | At Rated Speed | 196 to 441 kPa<br>2.0 to 4.5 kgf/cm$^2$<br>36 to 64 psi | 147 kPa<br>1.5 kgf/cm$^2$<br>27 psi |
| Inner Rotor to Outer Rotor | Clearance | 0.06 to 0.18 mm<br>0.0024 to 0.0071 in. | – |
| Outer Rotor to Pump Body | Clearance | 0.100 to 0.180 mm<br>0.0039 to 0.0071 in. | – |
| Rotor to Cover | Clearance | 0.030 to 0.085 mm<br>0.0012 to 0.0033 in. | – |

W1017384

## [3] COOLING SYSTEM

| | | | |
|---|---|---|---|
| Thermostat | Valve Opening Temperature (At Beginning) | 80.5 to 83.5 °C<br>176.9 to 182.3 °F | – |
| | Valve Opening Temperature (Opened Completely) | 95 °C<br>203 °F | – |
| Radiator | Water Leakage Test Pressure | No leaks at<br>137 kPa<br>1.4 kgf/cm$^2$<br>20 psi | – |
| Radiator Cap | Pressure Falling Time | 10 seconds or more for pressure falling from<br>88 to 59 kPa<br>from 0.9 to 0.6 kgf/cm$^2$<br>from 13 to 9 psi | – |
| Fan Belt | Tension | Approx. 10 mm (0.4 in.) deflection at 98 N<br>(10 kgf, 22 lbs) of force | – |

W1017547

# [4] FUEL SYSTEM

| Item | | Factory Specification | Allowable Limit |
|---|---|---|---|
| Injection Pump | Injection Timing | 0.33 to 0.37 rad.<br>19.0 to 21.0°<br>before T.D.C. | – |
| Pump Element | Fuel Tightness | – | 14.7 MPa<br>150 kgf/cm$^2$<br>2133 psi |
| Delivery Valve | Fuel Tightness | 10 seconds or more for pressure falling<br>from 14.7 to 13.7 MPa<br>from 150 to 140 kgf/cm$^2$<br>from 2133 to 1990 psi | 5 seconds for pressure falling<br>from 14.7 to 13.7 MPa<br>from 150 to 140 kgf/cm$^2$<br>from 2133 to 1990 psi |
| Fuel Injection Nozzle | Injection Pressure | 13.73 to 14.71 MPa<br>140 to 150 kgf/cm$^2$<br>1991 to 2133 psi | – |
| Fuel Injection Nozzle Valve Seat | Valve Seat Tightness | When the pressure is 12.75 MPa<br>(130 kgf/cm$^2$, 1849 psi),<br>the valve seat must be fuel tightness. | – |

W1013874

# 4. TIGHTENING TORQUES

Tightening torques of screws, bolts and nuts on the table below are especially specified.
(For general use screws, bolts and nuts : See page G-9.)

| Item | Size × Pitch | N·m | kgf·m | ft-lbs |
|---|---|---|---|---|
| Starter **M** terminal nut | M6 × 1.0 | 9.8 to 13.7 | 1.0 to 1.4 | 7.2 to 10.1 |
| Universal joint mounting screw | M8 × 1.25 | 26.0 to 28.0 | 2.7 to 2.9 | 19.2 to 20.7 |
| Engine support mounting screw | M10 × 1.25 | 48.1 to 55.9 | 4.9 to 5.7 | 35.4 to 41.2 |
| Engine mounting nut | M8 × 1.25 | 23.5 to 27.5 | 2.4 to 2.8 | 17.4 to 20.3 |
| Cushion mounting nut | M8 × 1.25 | 17.6 to 20.6 | 1.8 to 2.1 | 13.0 to 15.2 |

W1026185

**[D722-E-XFM5 · D782-E-XFM5]**

| | | | | |
|---|---|---|---|---|
| Cylinder head screw | M8 × 1.25 | 37.2 to 42.1 | 3.8 to 4.3 | 28.0 to 31.7 |
| * Cylinder head cover cap nut | M6 × 1.0 | 3.9 to 5.9 | 0.4 to 0.6 | 2.9 to 4.3 |
| Injection pipe retaining nut | M12 × 1.5 | 24.5 to 34.3 | 2.5 to 3.5 | 18.1 to 25.3 |
| Nozzle holder assembly | M20 × 1.5 | 49.0 to 68.6 | 5.0 to 7.0 | 36.2 to 50.6 |
| Overflow pipe assembly retaining nut (nozzle) | M12 × 1.5 | 19.6 to 24.5 | 2.0 to 2.5 | 14.5 to 18.1 |
| Glow plug | M8 × 1.0 | 7.8 to 14.7 | 0.8 to 1.5 | 5.8 to 10.8 |
| * Rocker arm bracket nut | M6 × 1.0 | 9.8 to 11.3 | 1.00 to 1.15 | 7.2 to 8.3 |
| * Fan drive pulley retaining screw | M12 × 1.5 | 117.6 to 127.4 | 12.0 to 13.0 | 86.8 to 94.0 |
| * Idle gear shaft mounting screw | M6 × 1.0 | 9.8 to 11.3 | 1.00 to 1.15 | 7.2 to 8.3 |
| * Connecting rod screw | M7 × 0.75 | 26.5 to 30.4 | 2.7 to 3.1 | 19.5 to 22.4 |
| * Flywheel bolt | M10 × 1.25 | 53.9 to 58.8 | 5.5 to 6.0 | 39.8 to 43.4 |
| * Main bearing case screw 2 | M7 × 1.0 | 26.5 to 30.4 | 2.7 to 3.1 | 19.5 to 22.4 |
| * Main bearing case screw 1 (D722) | M8 × 1.25 | 23.5 to 27.5 | 2.4 to 2.8 | 17.4 to 20.3 |
| (D782) | M6 × 1.0 | 12.7 to 15.7 | 1.3 to 1.6 | 9.4 to 11.6 |
| Oil pressure switch | PT 1/8 | 14.7 to 19.6 | 1.5 to 2.0 | 10.8 to 14.5 |
| Nozzle holder | | 34.3 to 39.2 | 3.5 to 4.0 | 25.3 to 28.9 |

■ **NOTE**

- **In removing and applying the bolts and nuts marked with " * ", a pneumatic wrench or similar pneumatic tool, if employed, must be used with enough care not to get them sized.**
- **For * marked screws, bolts and nuts on the table, apply engine oil to their threads and seats before tightening.**
- **The letter "M" in Size × Pitch means that the screw, bolt or nut dimension stands for metric. The size is the nominal outside diameter in mm of the threads. The pitch is the nominal distance in mm between two threads.**

W1013236

**[D1105-E-ZD]**

| Item | Size × Pitch | N·m | kgf·m | ft-lbs |
|---|---|---|---|---|
| Air cleaner stay nut | M10 × 1.25 | 48.1 to 55.9 | 4.9 to 5.7 | 35.4 to 41.2 |
| * Bearing case cover screw | M6 × 1.0 | 9.8 to 11.3 | 1.00 to 1.15 | 7.2 to 8.3 |
| Connecting rod screw | M8 × 1.0 | 41.2 to 46.1 | 4.2 to 4.7 | 30.3 to 33.9 |
| * Cylinder head cover cap nut | M7 × 1.0 | 6.9 to 8.8 | 0.7 to 0.9 | 5.1 to 6.5 |
| * Cylinder head screw | M10 × 1.25 | 63.7 to 68.6 | 6.5 to 7.0 | 47.0 to 50.6 |
| * Fan drive pulley screw | M14 × 1.5 | 235.4 to 245.2 | 24.0 to 25.0 | 173.6 to 180.8 |
| * Flywheel | M10 × 1.25 | 53.9 to 58.8 | 5.5 to 6.0 | 39.8 to 43.4 |
| Glow plug | M8 × 1.0 | 7.8 to 14.7 | 0.8 to 1.5 | 5.8 to 10.8 |
| * Idle gear shaft mounting screw | M6 × 1.0 | 9.8 to 11.3 | 1.00 to 1.15 | 7.2 to 8.3 |
| Injection pipe retaining nut | M12 × 1.5 | 24.5 to 34.3 | 2.5 to 3.5 | 18.1 to 25.3 |
| * Main bearing case screw 1 | M8 × 1.25 | 29.4 to 34.3 | 3.0 to 3.5 | 21.7 to 25.3 |
| * Main bearing case screw 2 | M9 × 1.25 | 49.0 to 53.9 | 5.0 to 5.5 | 36.2 to 39.8 |
| Nozzle holder | | 34.3 to 39.2 | 3.5 to 4.0 | 25.3 to 28.9 |
| Nozzle holder assembly | M20 × 1.5 | 49.0 to 68.6 | 5.0 to 7.0 | 36.2 to 50.6 |
| * Oil pressure switch | PT 1/8 | 14.7 to 19.6 | 1.5 to 2.0 | 10.8 to 14.5 |
| Overflow pipe assembly retaining nut | M12 × 1.5 | 19.6 to 24.5 | 2.0 to 2.5 | 14.5 to 18.1 |
| * Rocker arm bracket nut | M7 × 1.0 | 21.6 to 26.5 | 2.2 to 2.7 | 15.9 to 19.5 |

■ **NOTE**

- **In removing and applying the bolts and nuts marked with " * ", a pneumatic wrench or similar pneumatic tool, if employed, must be used with enough care not to get them sized.**
- **For * marked screws, bolts and nuts on the table, apply engine oil to their threads and seats before tightening.**
- **The letter "M" in Size × Pitch means that the screw, bolt or nut dimension stands for metric. The size is the nominal outside diameter in mm of the threads. The pitch is the nominal distance in mm between two threads.**

W1026768

# 5. CHECKING, DISASSEMBLING AND SERVICING

## [1] SEPARATING ENGINE

### (1) Disassembling and Assembling

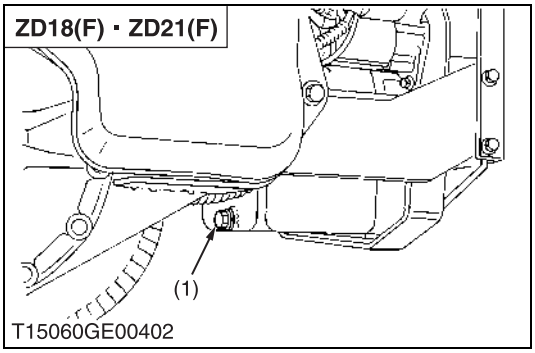


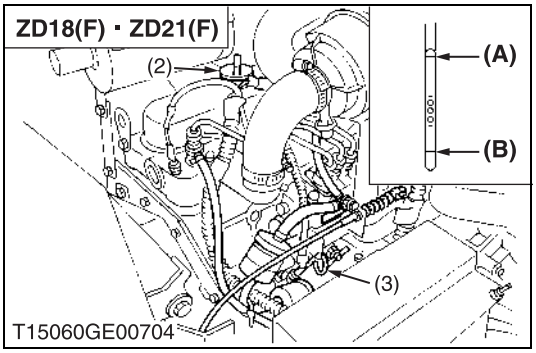


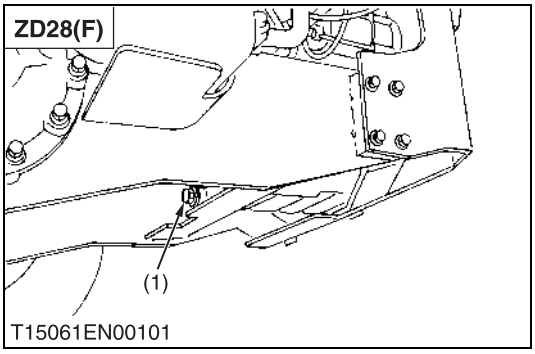


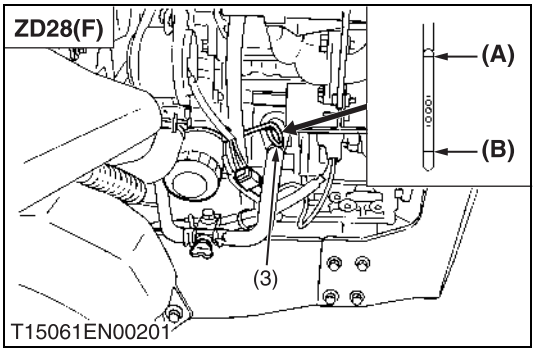


**Draining Engine Oil**

1. Park the machine on level ground.
2. Start and warm up the engine for approx. 5 minutes.
3. Place an oil pan underneath the engine.
4. Remove the drain plug (1) to drain oil.
5. After draining, screw in the drain plug (1).

**(When refilling)**

- Fill the engine oil up to the upper line on the dipstick (3).

| | | | |
|---|---|---|---|
| Engine oil | Capacity | D722 (ZD18(F)) | 3.2 L<br>3.4 U.S.qts.<br>2.8 Imp.qts. |
| | | D782 (ZD21(F)) | 3.5 L<br>3.7 U.S.qts.<br>3.1 Imp.qts. |
| | | D1105 (ZD28(F)) | 3.4 L<br>3.6 U.S.qts.<br>3.0 Imp.qts. |

■ **IMPORTANT**

- **Never mix two different type of oil.**
- **Use the proper SAE Engine Oil according to ambient temperatures.**
  **Refer to "LUBRICANTS, FUEL AND COOLANT". (See page G-7.)**

(1) Drain Plug
(2) Oil Inlet Plug
(3) Dipstick

**(A) Upper Level**
**(B) Lower Level**

W1019220

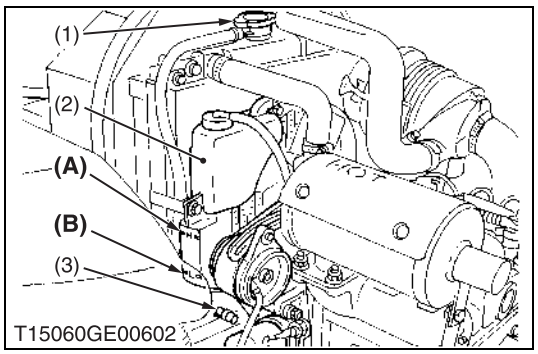


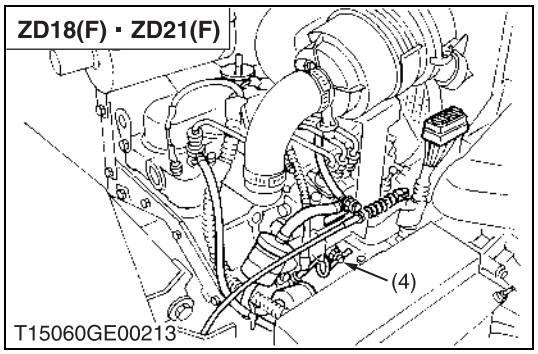


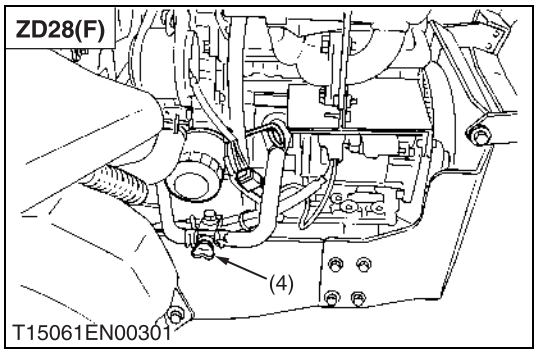


## Draining Coolant

**CAUTION**

- **Never open the radiator cap while operating or immediately after stopping. Otherwise, hot water will spout out from the radiator. Wait for more than ten minutes to cool the radiator, before opening the cap.**

1. Stop the engine and let cool down.
2. Remove the radiator coolant drain plug (3) and engine coolant drain plug (4) to drain the coolant.
3. Remove the radiator cap (1) to completely drain the coolant.
4. After all coolant is drained, close the drain plugs.

| | | | | |
|---|---|---|---|---|
| Coolant | Capacity | ZD18(F)<br>ZD21(F) | Radiator | 2.6 L<br>2.7 U.S.qts.<br>2.3 Imp.qts. |
| | | ZD28(F) | Radiator | 3.8 L<br>4.0 U.S.qts.<br>3.3 Imp.qts |
| | | — | Recovery tank | 0.25 L<br>0.26 U.S.qts.<br>0.22 Imp.qts |

(1) Radiator Cap
(2) Recovery Tank
(3) Radiator Coolant Drain Plug
(4) Engine Coolant Drain Cock

W1019510

**[ZD18(F) · ZD21(F)]**

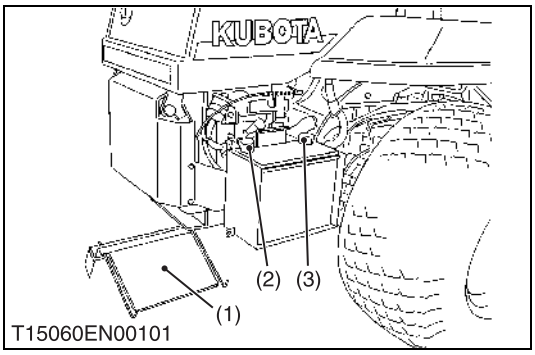


## Battery

**CAUTION**

- **When disconnecting the battery cables, disconnect the negative cable from the battery first. When connecting, connect the positive cable to the battery first.**

1. Remove the battery cover (1).
2. Disconnect the negative cable (3) from the battery.
3. Disconnect the positive cable (2) from the battery.

(1) Battery Cover
(2) Positive Cable
(3) Negative Cable

W1019788

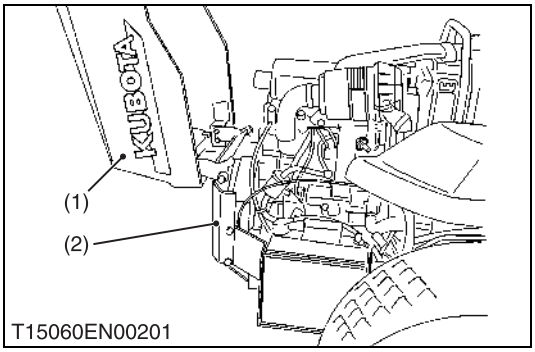


## Bonnet and Rear Bumper

1. Remove the snap pin and bonnet mounting screw, then remove the bonnet (1).
2. Remove the rear bumper (2).

(1) Bonnet
(2) Bumper

W1019921

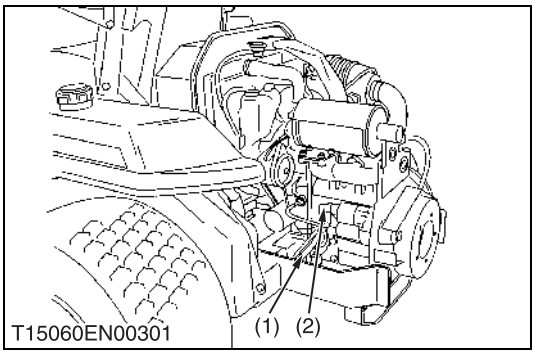


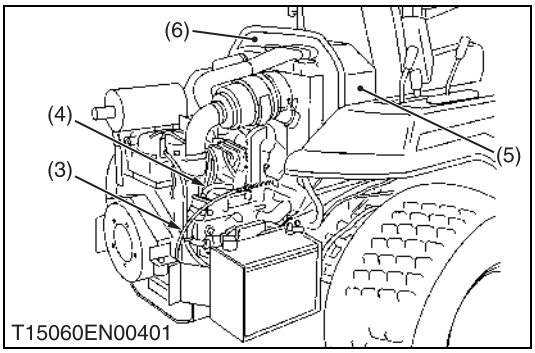


## Panel Screen, Shutter Plate and Others

1. Disconnect the wire harness (1) and positive cable (2) battery side first.
2. Disconnect the accelerator wire (3).
3. Disconnect the fuel hoses (4).
4. Remove the panel screen (5) and shutter plate (6).

■ **IMPORTANT**

- **When disconnecting the fuel hoses, be careful not to let the fuel spill out the hoses.**

(1) Wire Harness
(2) Positive Cable
(3) Accelerator Wire
(4) Fuel Hose
(5) Panel Screen
(6) Shutter Plate

W1033201

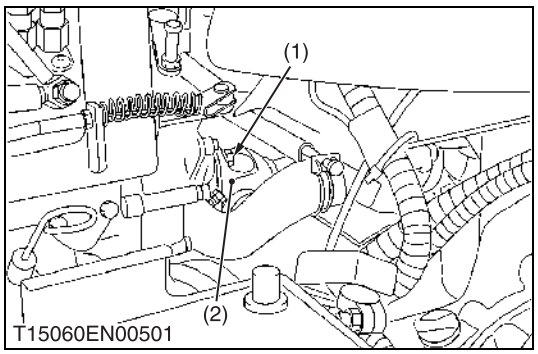


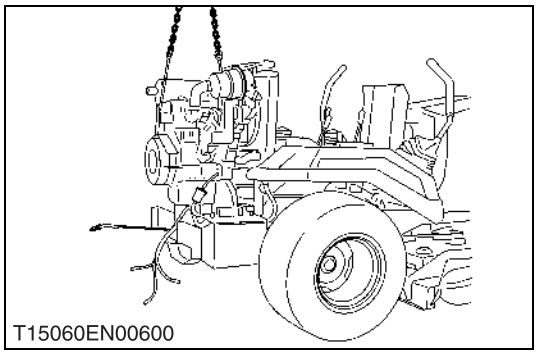


## Engine Disassembly

1. Remove the universal joint mounting screws (1).
2. Disconnect the universal joint (2) from fun drive pulley.
3. Pull out the snap pins from the radiator.
4. Remove the engine mounting nuts.
5. Separate the engine with the radiator from the frame, take care not to damage the radiator.

**(When reassembling)**

- Apply grease to the all splines on the drive shaft.

| | | |
|---|---|---|
| Tightening torque | Universal joint mounting screw | 26.0 to 28.0 N·m<br>2.7 to 2.9 kgf·m<br>19.2 to 20.7 ft-lbs |
| | Engine mounting nut | 23.5 to 27.5 N·m<br>2.4 to 2.8 kgf·m<br>17.4 to 20.3 ft-lbs |

(1) Universal Joint Mounting Screw (2) Universal Joint

W1033679

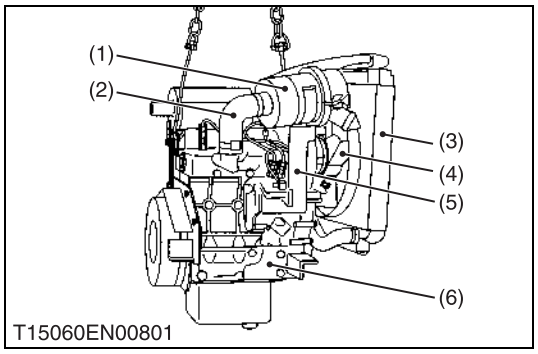


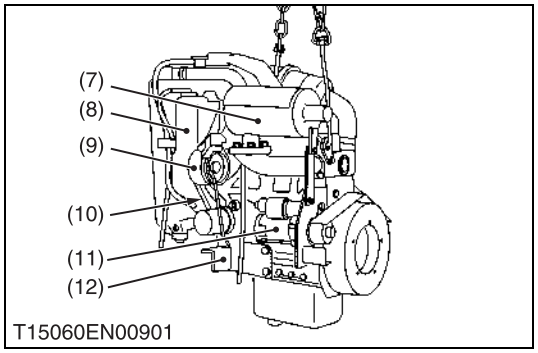


## Dynamo, Fan Belt and Muffler

1. Disconnect the radiator hoses and separate the radiator (3) with recovery tank (8) from engine assembly.
2. Remove the cooling fan (4) and fan pulley.
3. Remove the dynamo (9) and fan belt (10).
4. Remove the muffler (7).
5. Remove the starter (11).
6. Disconnect the inlet pipe (2), air cleaner (1) and air cleaner stay (5).
7. Remove the wire bracket.
8. Remove the engine support LH (12) and RH (6).

**(When reassembling)**

- Check to see that there are no cracks on the belt surface.

■ **IMPORTANT**

- **After reassembling the fan belt, be sure to adjust the fan belt tension.**

| | | |
|---|---|---|
| Tightening torque | Engine support mounting screw | 48.1 to 55.9 N·m<br>4.9 to 5.7 kgf·m<br>35.4 to 41.2 ft-lbs |

(1) Air Cleaner
(2) Inlet Pipe
(3) Radiator
(4) Cooling Fan
(5) Air Cleaner Stay
(6) Engine Support RH
(7) Muffler
(8) Recovery Tank
(9) Dynamo
(10) Fan Belt
(11) Starter
(12) Engine Support LH

W1024919

**[ZD28(F)]**

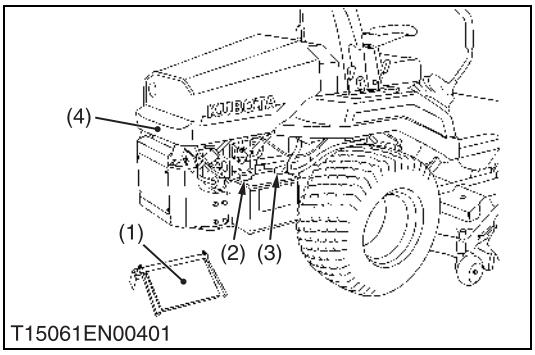


## Battery and Bonnet

**CAUTION**

- **When disconnecting the battery cables, disconnect the negative cable from the battery first. When connecting, connect the positive cable to the battery first.**

1. Remove the battery cover (1).
2. Disconnect the negative cable (3) from the battery.
3. Disconnect the positive cable (2) from the battery.
4. Remove the snap pin and bonnet mounting screw, then remove the bonnet (4).

(1) Battery Cover
(2) Positive Cable
(3) Negative Cable
(4) Bonnet

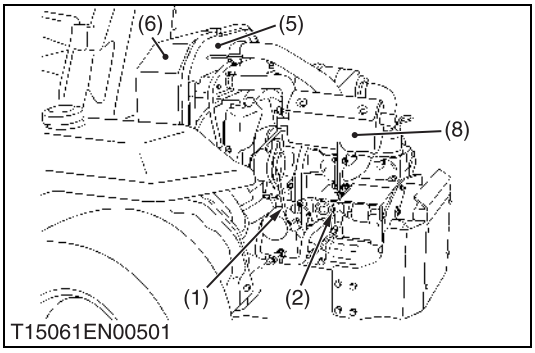


## Panel Screen, Shutter Plate and Others

1. Disconnect the glow plug and stop solenoide harness (1) and positive cable (2) battery side first.
2. Disconnect the accelerator wire (3) and fuse box from shutter plate (5).
3. Disconnect the fuel hoses (4).
4. Remove the air cleaner (7) and muffler (8).
5. Remove the panel screen (6).

■ **IMPORTANT**

- **When disconnecting the fuel hoses, be careful not to let the fuel spill out the hoses.**

(1) Wire Harness
(2) Positive Cable
(3) Accelerator Wire
(4) Fuel Hose
(5) Shutter Plate
(6) Panel Screen
(7) Air Cleaner
(8) Muffler

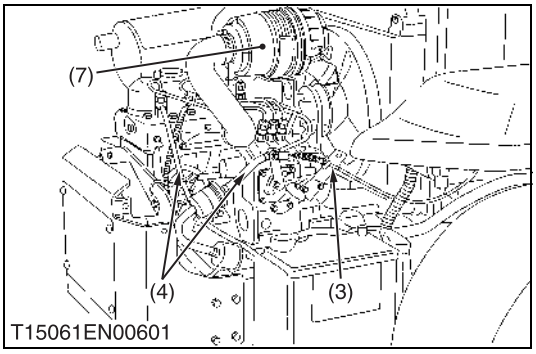


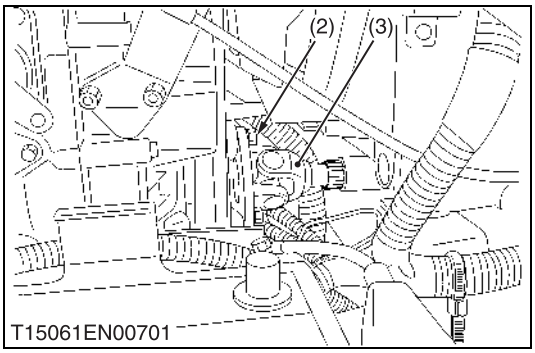


## Engine Disassembly

1. Remove the universal joint mounting screws (2).
2. Disconnect the universal joint (3) from fun drive pulley.
3. Remove the engine mounting nuts.
4. Separate the engine with the radiator from the frame, take care not to damage the radiator.

**(When reassembling)**

- Apply grease to the all splines on the drive shaft.

| | | |
|---|---|---|
| Tightening torque | Universal joint mounting screw | 26.0 to 28.0 N·m<br>2.7 to 2.9 kgf·m<br>19.2 to 20.7 ft-lbs |
| | Engine mounting nut | 23.5 to 27.5 N·m<br>2.4 to 2.8 kgf·m<br>17.4 to 20.3 ft-lbs |

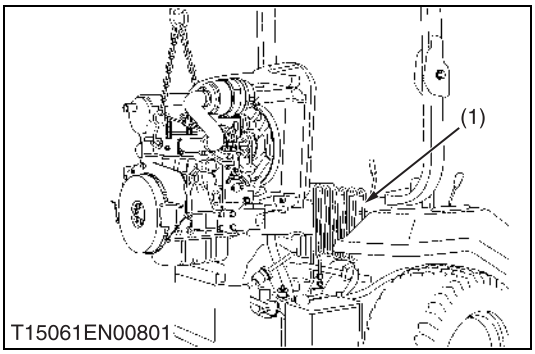


(1) Oil Cooler
(2) Universal Joint Mounting Screw
(3) Universal Joint

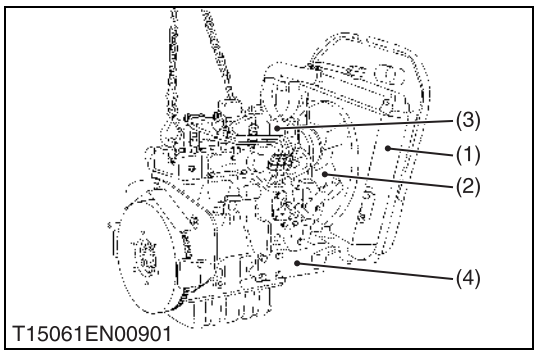

T15061EN00901

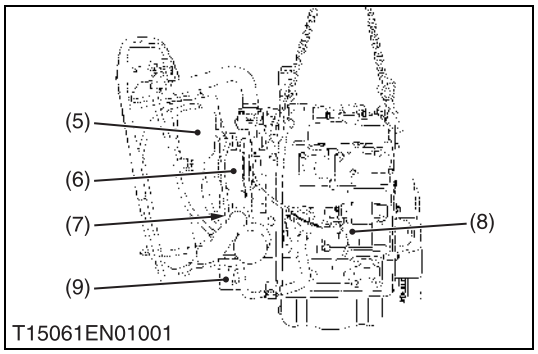

T15061EN01001

## Dynamo, Fan Belt and Muffler

1. Disconnect the radiator hoses and separate the radiator (1) with recovery tank (5) from engine assembly.
2. Remove the cooling fan (2) and fan pulley.
3. Remove the dynamo (6) and fan belt (7).
4. Remove the starter (8).
5. Remove the air cleaner stay (3).
6. Remove the wire bracket.
7. Remove the engine support LH (9) and RH (4).

**(When reassembling)**

- Check to see that there are no cracks on the belt surface.

■ **IMPORTANT**

- **After reassembling the fan belt, be sure to adjust the fan belt tension.**

| | | |
|---|---|---|
| Tightening torque | Engine support mounting screw | 48.1 to 55.9 N·m<br>4.9 to 5.7 kgf·m<br>35.4 to 41.2 ft-lbs |

(1) Radiator
(2) Cooling Fan
(3) Air Cleaner Stay
(4) Engine Support RH
(5) Recovery Tank
(6) Dynamo
(7) Fan Belt
(8) Starter
(9) Engine Support LH

# [2] ENGINE BODY

## (1) Checking and Adjusting

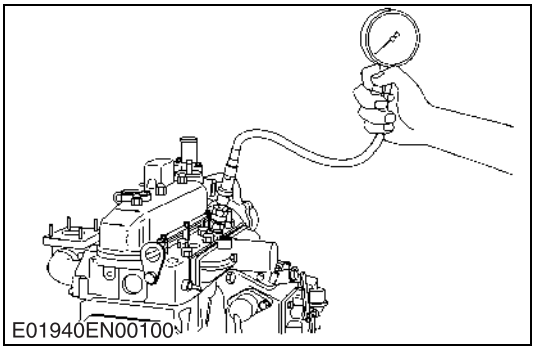


**Compression Pressure**

1. Run the engine until it is warmed up.
2. Stop the engine.
3. Disconnect the **2P** connector from the fuel pump.
4. Remove the air cleaner, the muffler and all injection nozzles.
5. Disconnect the accelerator wire.
6. Engage the parking brake.
7. Set a compression tester (Code No. 07909-30208) with the adaptor (Adaptor H, Code No. 07909-31231) to the nozzle hole.
8. While cranking the engine with the starter, measure the compression pressure.
9. Repeat steps 7 and 8 for each cylinder.
10. If the measurement is below the allowable limit, apply a small amount of oil to the cylinder wall through the nozzle hole and measure the compression pressure again.
11. If the compression pressure is still less than the allowable limit, check the top clearance, valve clearance and cylinder head.
12. If the compression pressure increases after applying oil, check the cylinder wall and piston rings.

■ **NOTE**

- **Check the compression pressure with the specified valve clearance.**
- **Always use a fully charged battery for performing this test.**
- **Variances in cylinder compression values should be under 10 %.**

| | | |
|---|---|---|
| Compression pressure | Factory spec. | 2.84 to 3.24 MPa<br>29.0 to 33.0 kgf/cm$^2$<br>412 to 469 psi |
| | Allowable limit | 2.26 MPa<br>23.0 kgf/cm$^2$<br>327 psi |

W1022478

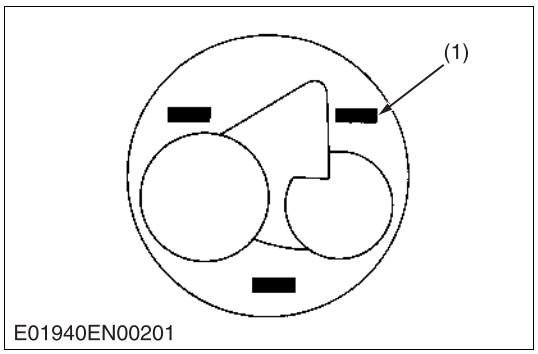

E01940EN00201

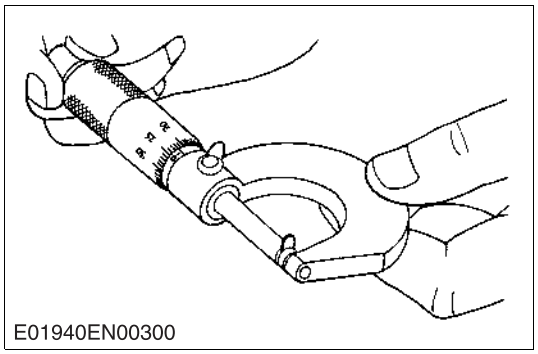
E01940EN00300

**Top Clearance**

1. Remove the cylinder head. (Do not attempt to remove the cylinder head gasket.)
2. Move the piston up, and stick a strip of fuse [1.5 mm dia. (0.059 in. dia.), 5 to 7 mm long (0.197 to 0.276 in. long)] on the piston head at three positions with grease so as to avoid the intake and exhaust valves and the combustion chamber ports.
3. Lower the piston, and install the cylinder head and tighten the cylinder head screws to the specified torque.
4. Turn the crankshaft until the piston exceeds its top dead center.
5. Remove the cylinder head, and measure the thickness of the squeezed fuses.
6. If the measurement is not within the factory specifications, check the oil clearance between the crankpin and crankpin bearing and between the piston pin and small end bushing.

■ **NOTE**

- **After checking the top clearance, be sure to assemble the cylinder head with a new cylinder head gasket.**

| | | | |
|---|---|---|---|
| Top clearance | Factory spec. | D722<br>D782 | 0.50 to 0.70 mm<br>0.0197 to 0.0276 in. |
| | | D1105 | 0.55 to 0.70 mm<br>0.0217 to 0.276 in. |

| | | | |
|---|---|---|---|
| Tightening torque | Cylinder head screw | D722<br>D782 | 37.2 to 42.1 N·m<br>3.8 to 4.3 kgf·m<br>28.0 to 31.7 ft-lbs |
| | | D1105 | 63.7 to 68.6 N·m<br>6.5 to 7.0 kgf·m<br>47.0 to 50.6 ft-lbs |

(1) Fuse

W10107670

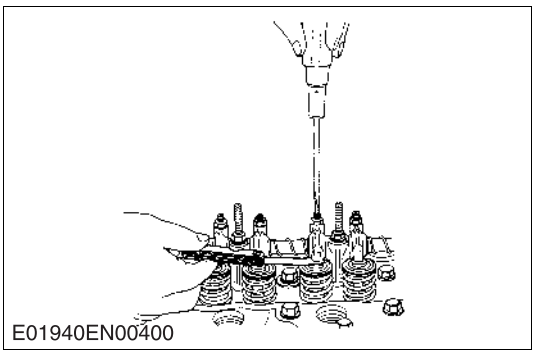
E01940EN00400

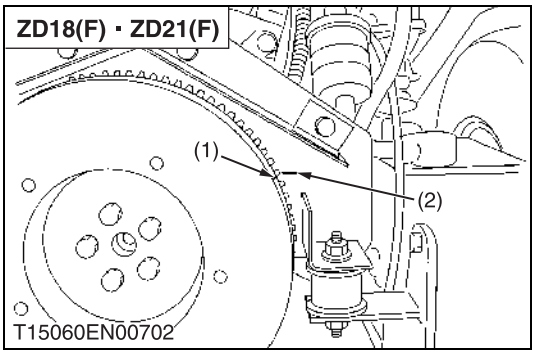

T15060EN00702

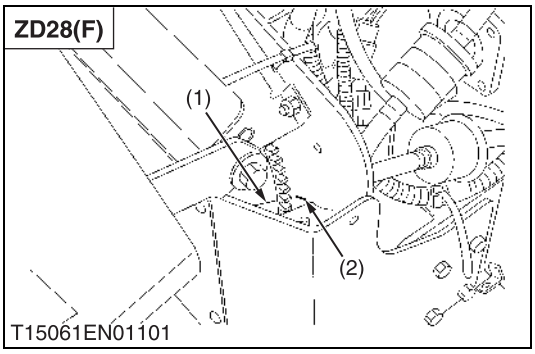

T15061EN01101

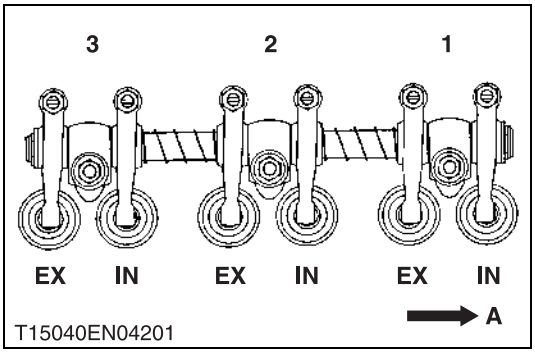

T15040EN04201

## Valve Clearance

■ **IMPORTANT**

- **The valve clearance must be checked and adjusted when engine is cold.**

1. Remove the cylinder head cover and the glow plugs.
2. Align the “1TC” mark (1) on the flywheel and alignment mark (2) on the rear end plate so that the No. 1 piston comes to the compression top dead center.
3. Check the following valve clearance marked with “★” using a feeler gauge.

**[When No. 1 piston comes to the compression top dead center]**

| Cylinder No. | No. 1 | No. 2 | No. 3 |
|---|---|---|---|
| Intake valve | ★ | | ★ |
| Exhaust valve | ★ | ★ | |

4. If the clearance is not within the factory specifications, adjust with the adjusting screw.
5. Then turn the flywheel 6.28 rad. (360°), and align the “1TC” mark (1) on the flywheel and alignment mark (2) on the rear end plate so that the No. 1 piston comes to the overlap position.
6. Check the following valve clearance marked with “☆” using a feeler gauge.

**[When No. 1 piston comes to the overlap position]**

| Cylinder No. | No. 1 | No. 2 | No. 3 |
|---|---|---|---|
| Intake valve | | ☆ | |
| Exhaust valve | | | ☆ |

7. If the clearance is not within the factory specifications, adjust with the adjusting screw.

| | | |
|---|---|---|
| Intake and exhaust valve clearance (Cold) | Factory spec. | 0.145 to 0.185 mm<br>0.00571 to 0.00728 in. |

■ **NOTE**

- **The sequence of cylinder numbers is given as No. 1, No. 2 and No. 3 starting from the gear case side.**
- **After adjusting the valve clearance, secure the adjusting screw with the lock nut.**

(1) “1TC” Mark
(2) Alignment Mark

**A : Gear Case Side**

W10113200

## (2) Disassembling and Assembling

## (A) Cylinder Head and Valves

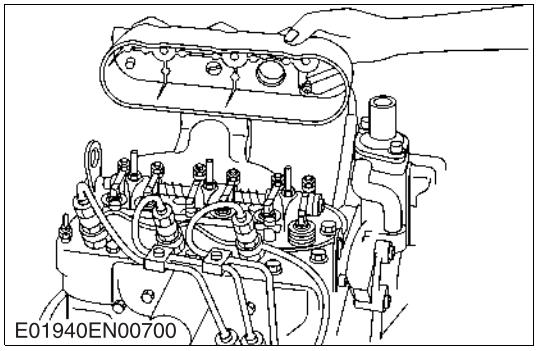
E01940EN00700

### Cylinder Head Cover

1. Remove the head cover cap nuts.
2. Remove the cylinder head cover.

**(When reassembling)**

- Check to see if the cylinder head cover gasket is not defective.
- Apply engine oil to the cylinder head cover cap nuts. And tighten them.

| | | | |
|---|---|---|---|
| Tightening torque | Cylinder head cover cap nut | D722<br>D782 | 3.9 to 5.9 N·m<br>0.4 to 0.6 kgf·m<br>2.9 to 4.3 ft-lbs |
| | | D1105 | 6.9 to 8.8 N·m<br>0.7 to 0.9 kgf·m<br>5.1 to 6.5 ft-lbs |

W10147380

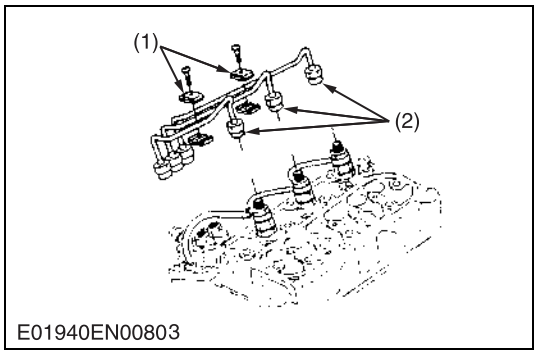

E01940EN00803

### Injection Pipes

1. Loosen the screws on the pipe clamps (1).
2. Detach the injection pipes (2).

**(When reassembling)**

- Blow out dust from the pipes with compressed air. Then reassemble the pipes in the reverse order.

| | | |
|---|---|---|
| Tightening torque | Injection pipe retaining nut | 24.5 to 34.3 N·m<br>2.5 to 3.5 kgf·m<br>18.1 to 25.3 ft-lbs |

(1) Pipe Clamp (2) Injection Pipe

W10150780

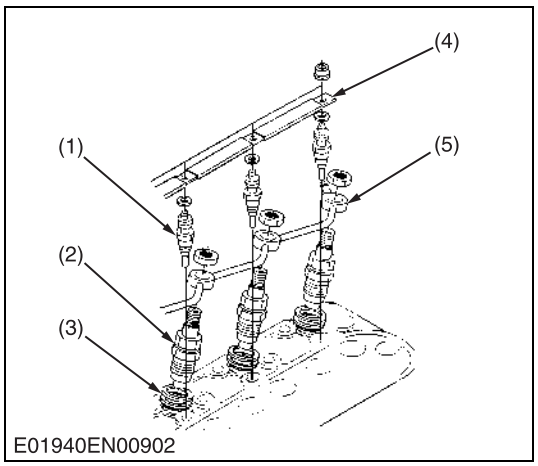

E01940EN00902

### Nozzle Holder Assembly and Glow Plug

1. Remove the overflow pipe assembly (5).
2. Remove the nozzle holder assemblies (2) using a 21 mm deep socket wrench.
3. Remove the copper gasket and heat seal (3).
4. Remove the lead (4) from the glow plugs.
5. Remove the glow plugs (1).

**(When reassembling)**

- Replace the copper gasket and heat seal with new one.

| | | |
|---|---|---|
| Tightening torque | Nozzle holder assembly | 49.0 to 68.6 N·m<br>5.0 to 7.0 kgf·m<br>36.2 to 50.6 ft-lbs |
| | Overflow pipe assembly retaining nut | 19.6 to 24.5 N·m<br>2.0 to 2.5 kgf·m<br>14.5 to 18.1 ft-lbs |
| | Glow plug | 7.8 to 14.7 N·m<br>0.8 to 1.5 kgf·m<br>5.8 to 10.8 ft-lbs |

(1) Glow Plug
(2) Nozzle Holder Assembly
(3) Heat Seal
(4) Lead
(5) Overflow Pipe Assembly

W10259700

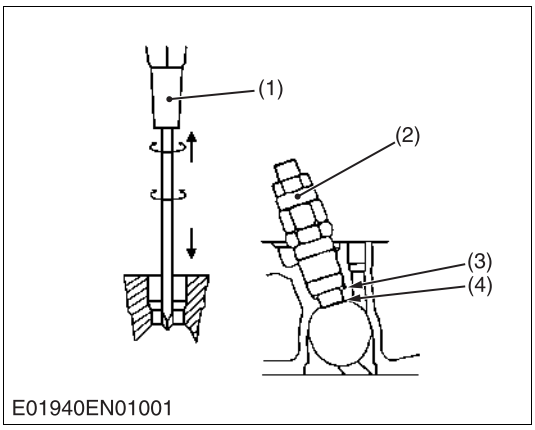


## Removal Procedure for Nozzle Heat Seal Service

■ **IMPORTANT**

- **Use a plus (phillips head) screw driver (1) that has a Dia. bigger than the heat seal hole (Approx. 6 mm) 1/4 in..**

1. Drive a screw driver (1) lightly into the heat seal hole.
2. Turn a screw driver three or four times each way.
3. While turning the screw driver, slowly pull the heat seal (4) out together with the copper gasket (3).
4. If the heat seal drops, repeat the above procedure.

(1) Screw driver (Plus)
(2) Nozzle Holder
(3) Copper Gasket
(4) Heat Seal

W10154410

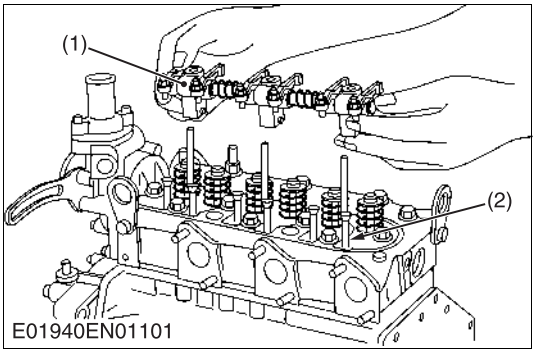


## Rocker Arm and Push Rod

1. Remove the rocker arm bracket nuts.
2. Detach the rocker arm assembly (1).
3. Remove the push rods (2).

**(When reassembling)**

- When putting the push rods (2) onto the tappets (3), check to see if their ends are properly engaged with the grooves.

■ **IMPORTANT**

- **After installing the rocker arm, be sure to adjust the valve clearance.**
- **Apply engine oil to the rocker arm bracket nuts. And tighten them.**

| | | | |
|---|---|---|---|
| Tightening torque | Rocker arm bracket nut | D722<br>D782 | 9.8 to 11.3 N·m<br>1.00 to 1.15 kgf·m<br>7.2 to 8.3 ft-lbs |
| | | D1105 | 21.6 to 26.5 N·m<br>2.2 to 2.7 kgf·m<br>15.9 to 19.5 ft-lbs |

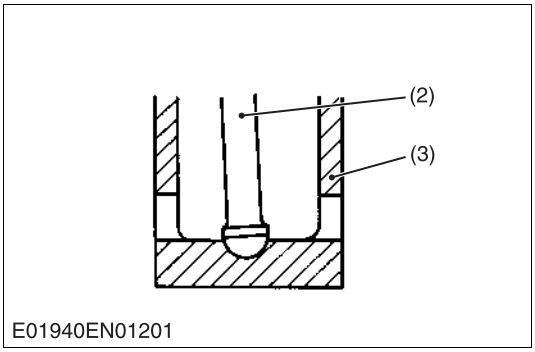


(1) Rocker Arm Assembly
(2) Push Rod
(3) Tappet

W10155810

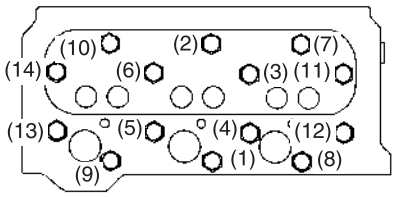

T15040EN04301

## Cylinder Head

1. Loosen the pipe clamp, and remove the water return pipe.
2. Remove the cylinder head bolt in the order of (14) to (1).
3. Lift up the cylinder head to detach.
4. Remove the cylinder head gasket and O-ring.

**(When reassembling)**

- Replace the cylinder head gasket with a new one.
- Securely fit the O-ring to the pipe pin.
- Tighten the cylinder head screws after applying sufficient oil.
- Tighten the cylinder head screws in diagonal sequence starting from the center. (Refer to figure left.)
- Tighten them uniformly, or the cylinder head may deform in the long run.
- Retighten the cylinder head screws after running the engine for 30 minutes.

■ **NOTE**

- **To Loosen : 14 to 1**
- **To Tighten : 1 to 14**

| | | | |
|---|---|---|---|
| Tightening torque | Cylinder head screw | D722<br>D782 | 37.2 to 42.1 N·m<br>3.8 to 4.3 kgf·m<br>28.0 to 31.7 ft-lbs |
| | | D1105 | 63.7 to 68.6 N·m<br>6.5 to 7.0 kgf·m<br>47.0 to 50.6 ft-lbs |

W10159710

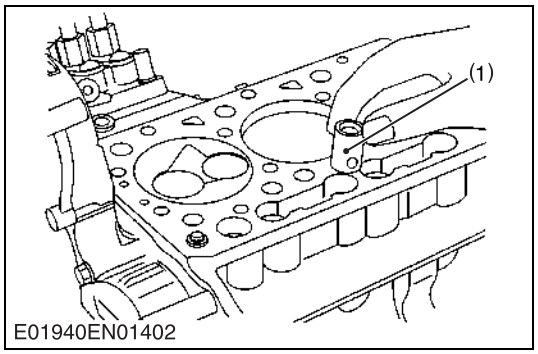

E01940EN01402

## Tappets

1. Remove the tappets (1) from the crankcase.

**(When reassembling)**

- Before installing the tappets, apply engine oil thinly around them.

■ **IMPORTANT**

- **Mark the cylinder number to the tappets to prevent interchanging.**

(1) Tappet

W1027457

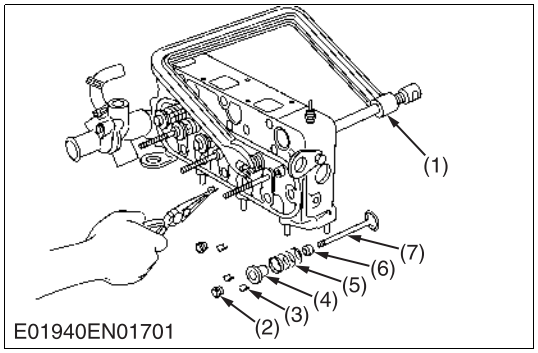

E01940EN01701

## Valves

1. Remove the valve caps (2).
2. Remove the valve spring collet (3), pushing the valve spring retainer (4) by valve spring replacer (1).
3. Remove the valve spring retainer (4), valve spring (5) and valve stem seal (6).
4. Remove the valve (7).

**(When reassembling)**

- Wash the valve stem and valve guide hole, and apply engine oil sufficiently.
- After installing the valve spring collets, lightly tap the stem to assure proper fit with a plastic hammer.

■ **IMPORTANT**

- **Don’t change the combination of valve and valve guide.**

(1) Valve Spring Replacer
(2) Valve Cap
(3) Valve Spring Collet
(4) Valve Spring Retainer
(5) Valve Spring
(6) Valve Stem Seal
(7) Valve

W10162820

## (B) Timing Gears, Fuel Camshaft and Camshaft [D722-E-XFM5, D782-E-XFM5]

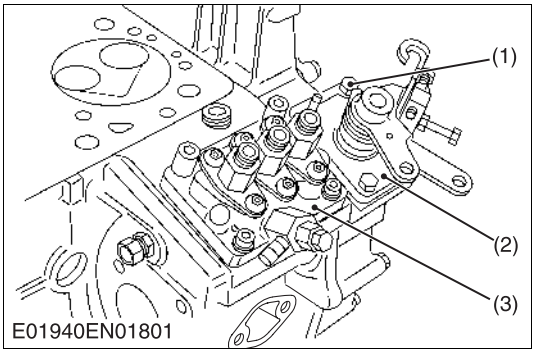


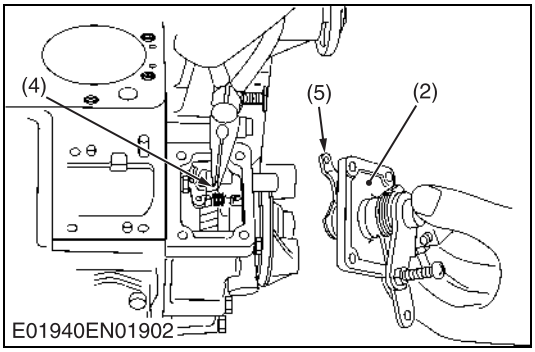


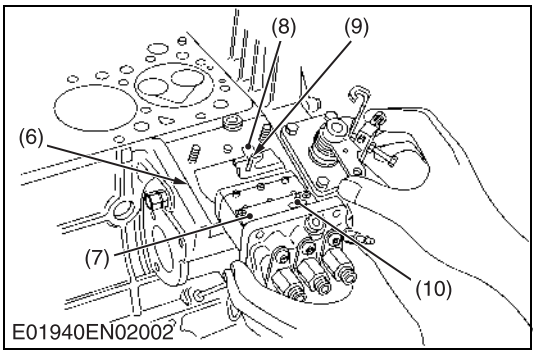


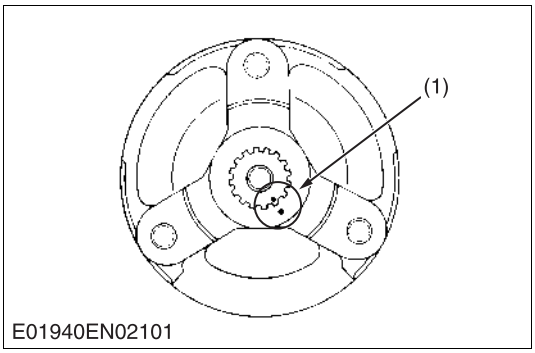


### Injection Pump and Speed Control Plate

1. Remove the socket head screws and nuts, and remove the injection pump (3).
2. Remove the screws and separate the speed control plate (2), taking care not to damage the spring (4).
3. Disconnect the spring (4) and remove the speed control plate (2).

**(When reassembling)**

- Hook the spring (4) to the lever (5) first and install the speed control plate (2).
- Be sure to place the copper washers underneath two screws (1) (as shown in the figure).
- Position the slot (9) on the fork lever just under the slot (8) on the crankcase.
- Insert the injection pump (3) so that the control rod (7) should be pushed by the spring (6) at its end and the pin (10) on the rod engages with the slot (9) on the fork lever (as shown in the figure).

■ **NOTE**

- **The sealant is applied to both sides of the soft metal gasket shim. The liquid gasket is not required for assembling.**
- **Addition or reduction of shim (0.05 mm, 0.0020 in.) delays or advances the injection timing by approx. 0.0087 rad. (0.5°).**
- **In disassembling and replacing, be sure to use the same number of new gasket shims with the same thickness.**

(1) Screws and Copper Washers
(2) Speed Control Plate
(3) Injection Pump
(4) Spring
(5) Lever
(6) Spring
(7) Control Rod
(8) Slot (Crankcase Side)
(9) Slot (Fork Lever Side)
(10) Pin

W10167080

### Fan Drive Pulley

1. Set the stopper to the flywheel.
2. Remove the fan drive pulley retaining screw.
3. Draw out the fan drive pulley with a puller.

**(When reassembling)**

- Install the pulley to the crankshaft, aligning the mark (1) on them.
- Apply engine oil to the fan drive pulley retaining screws. And tighten them.

| | | |
|---|---|---|
| Tightening torque | Fan drive pulley retaining screw | 117.6 to 127.4 N·m<br>12.0 to 13.0 kgf·m<br>86.8 to 94.0 ft-lbs |

(1) Aligning Mark

W10172470

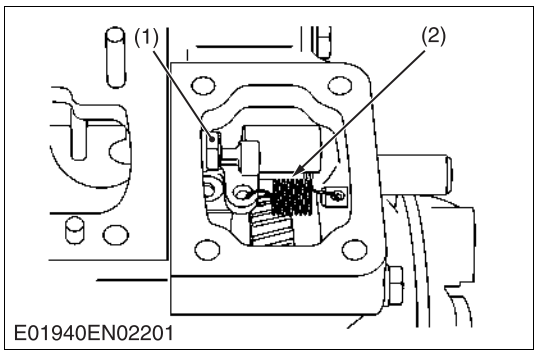

E01940EN02201

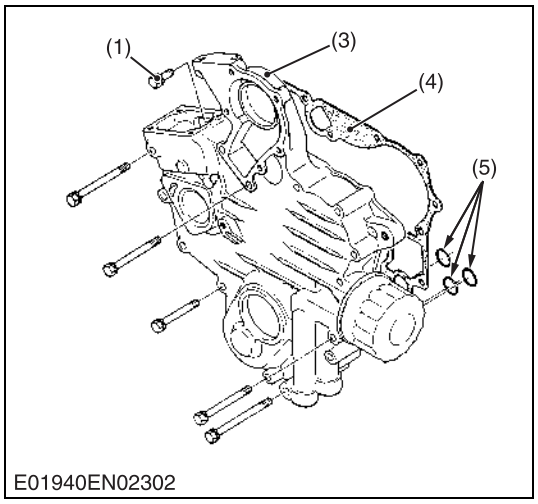

E01940EN02302

## Gear Case

1. Remove the screw (1).
2. Disconnect the start spring (2) in the speed control plate mounting hole.
3. Remove the gear case (3).

**(When reassembling)**

- Apply a liquid gasket (Three Bond 1215 or equivalent) to both sides of the gear case gasket (4).
- Be sure to set three O-rings (5) inside the gear case.

(1) Screw
(2) Start Spring
(3) Gear Case
(4) Gear Case Gasket
(5) O-rings

W10174840

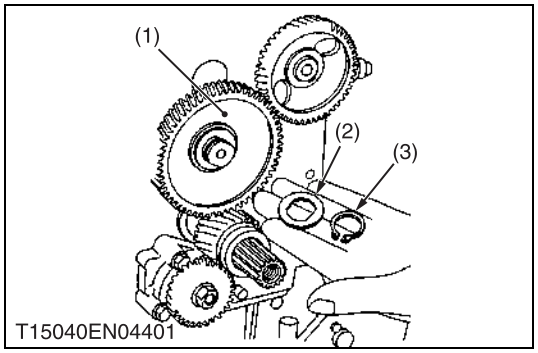

T15040EN04401

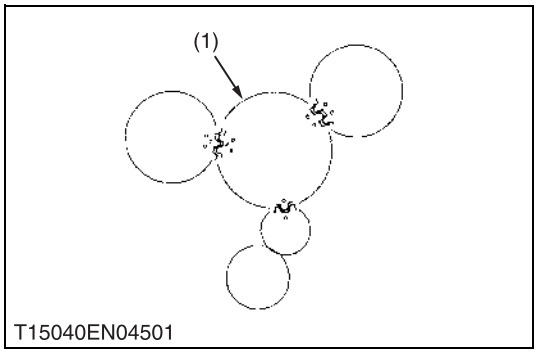

T15040EN04501

## Idle Gear

1. Remove the external snap ring (3), the collar (2) and the idle gear (1).
2. Remove the idle gear shaft mounting screws.
3. Remove the idle gear shaft.

**(When reassembling)**

- Install the idle gear, aligning the mark on the gears referring to the figure.
- Apply engine oil to the idle gear shaft mounting screws. And tighten them.

| | | |
|---|---|---|
| Tightening torque | Idle gear shaft mounting screw | 9.8 to 11.3 N·m<br>1.00 to 1.15 kgf·m<br>7.2 to 8.3 ft-lbs |

(1) Idle Gear
(2) Idle Gear Collar
(3) External Snap Ring

W1028418

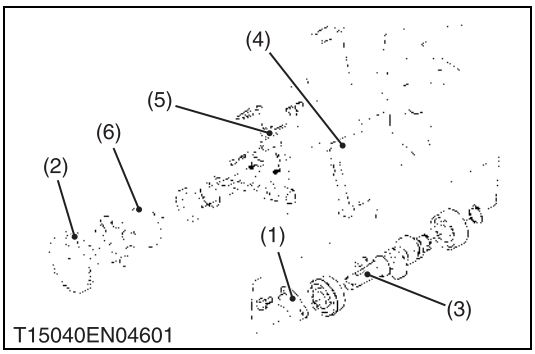


**Fuel Camshaft**

1. Remove the screws and draw out the camshaft with the gear on it.
2. Remove the retaining plate (1).
3. Remove the screws, then draw out the injection pump gear (2) and fuel camshaft (3) with the governor fork assembly.

**(When reassembling)**

- Hook the spring to the fork lever 2 (4) as shown in the figure before installing the fork lever assembly to the crankcase.

(1) Retaining Plate
(2) Injection Pump Gear
(3) Fuel Camshaft
(4) Fork Lever 2
(5) Fork Lever 1
(6) Governor Sleeve

W10178820

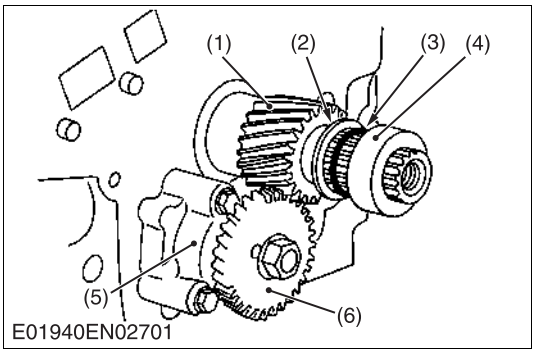


**Oil Pump and Crankshaft Gear**

1. Remove the oil pump gear (6).
2. Remove the oil pump (5).
3. Remove the collar (4), O-ring (3) and oil slinger (2).
4. Remove the crankshaft gear (1) with a puller.

**(When reassembling)**

- Install the oil slinger (2) and O-ring (3) after aligning the marks on the gears. (See the figure at “Idle Gear”.)
- Install the crankshaft collar (4) after installing the gear case cover.

(1) Crankshaft Gear
(2) Crankshaft Oil Slinger
(3) O-ring
(4) Crankshaft Collar
(5) Oil Pump
(6) Oil Pump Gear

W10180290

## (C) Timing Gears, Fuel Camshaft and Camshaft [D1105-E-ZD]

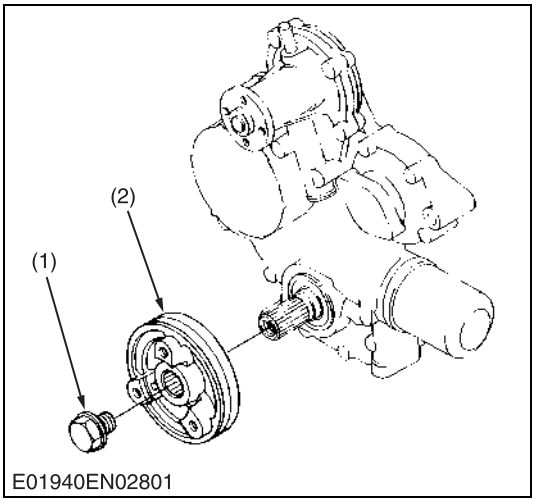


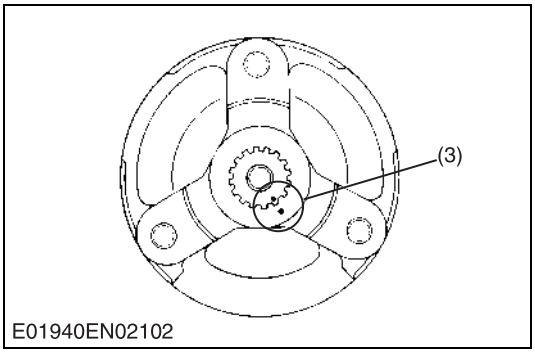


**Fan Drive Pulley**

1. Set the stopper to the flywheel.
2. Remove the fan drive pulley screw (1).
3. Draw out the fan drive pulley (2) with a puller.

**(When reassembling)**

- Install the fan drive pulley to the crankshaft, aligning the marks (3) on them.

| | | |
|---|---|---|
| Tightening torque | Fan drive pulley retaining screw | 235.4 to 245.2 N·m<br>24.0 to 25.0 kgf·m<br>173.6 to 180.8 ft-lbs |

(1) Fan Drive Pulley Screw
(2) Fan Drive Pulley
(3) Aligning Mark

W1035250

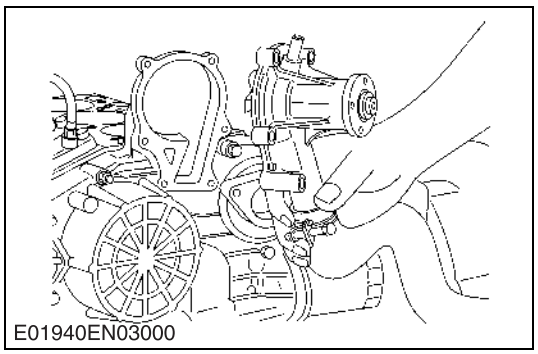
E01940EN03000

## Water Pump

1. Remove the water pump flange.

**(When reassembling)**

- Before installing the water pump flange gasket, apply liquid gasket (Three Bond 1215 or equivalent) to the both side.

W1035410

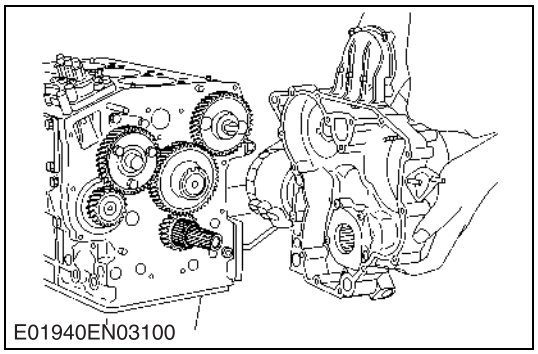
E01940EN03100

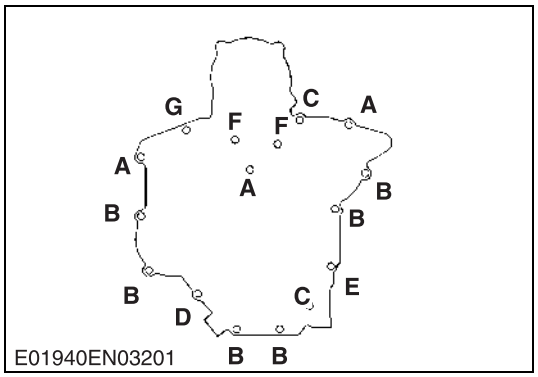

E01940EN03201

## Gear Case

1. Remove the gear case.
2. Remove the crankshaft collar and O-rings.

**(When reassembling)**

- Replace the gear case gasket with a new one.
- Be sure to set four O-rings inside the gear case and the O-ring on the crankshaft.
- Apply a thin film of engine oil to the oil seal, and install it, noting the lip come off.
- Length of the gear case mounting screws. (Refer to the figure.)
  A : 45 mm (1.77 in.)
  B : 50 mm (1.97 in.)
  C : 55 mm (2.17 in.)
  D : 59 mm (2.32 in.)
  E : 68 mm (2.68 in.)
  F : 80 mm (3.15 in.)
  G : Nut

W1035535

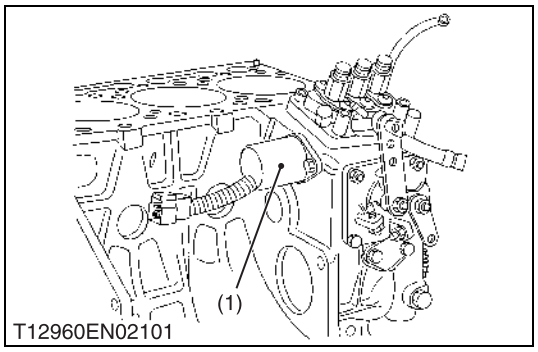

T12960EN02101

## Engine Stop Solenoid

1. Remove the engine stop solenoid (1).

**(When reassembling)**

- Apply a thin coat of liquid-type gasket (Three Bond 1215 or equivalent) to both surfaces of the solenoid's cover packing.
- Confirm the convex part of the flange of the engine stop solenoid has fitted into the hole, and then fasten the bolts.

(1) Engine Stop Solenoid

W1035740

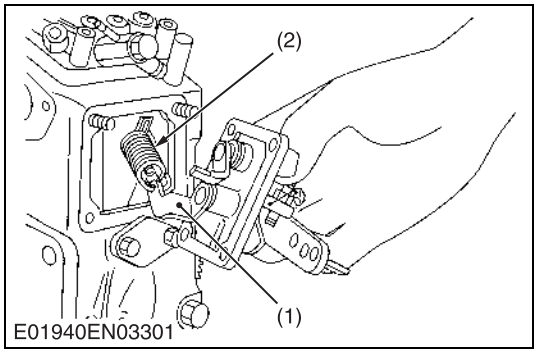

E01940EN03301

## Speed Control Plate

1. Remove the speed control plate and governor lever (1) from the governor springs 1 (2).

**(When reassembling)**

- Securely catch the governor spring on the governor lever as shown in the figure.
- Apply a liquid gasket (Three Bond 1215 or equivalent) to both sides of the speed control plate gasket.

(1) Governor Lever (2) Governor Spring 1

W1035848

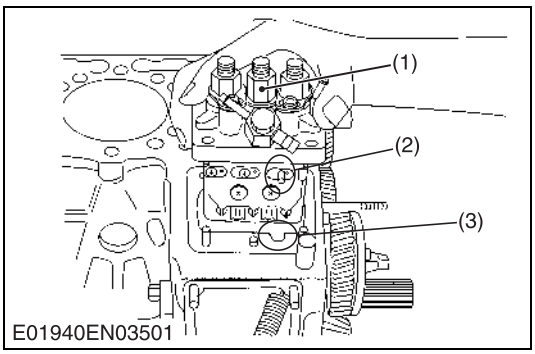


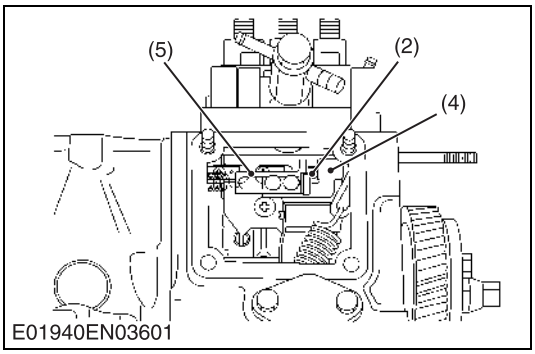


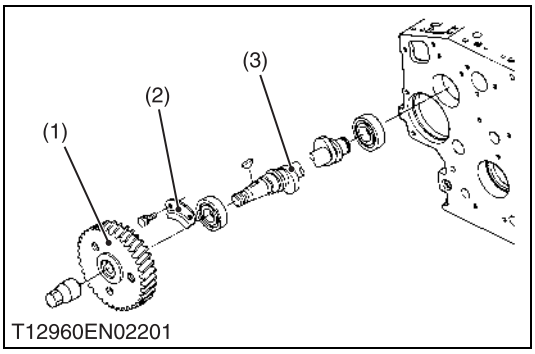


## Injection Pump

1. Remove the injection pump mounting screws and nuts.
2. Align the control rack pin (2) with the notch (3) on the crankcase, then remove the injection pump (1).
3. Remove the injection pump timing shims.
4. In principle, the injection pump should not be disassembled.

**(When reassembling)**

- Securely fit the control rack pin (2) to the grooves of the fork lever 1 (4) and thrust lever (5).
- The sealant is applied to both sides of the shim (soft metal gasket shim). The liquid gasket is not required for assembling.
- Addition or reduction of shims (0.05 mm, 0.0020 in.) delays or advances the injection timing by approx. 0.0087 rad. (0.5°).
- In disassembling and replacing, be sure to use the same number of new shims with the same thickness.

(1) Injection Pump
(2) Control Rack Pin
(3) Notch
(4) Fork Lever 1
(5) Thrust Lever

W1035956

## Fuel Camshaft

1. Remove the fuel camshaft stopper (2).
2. Draw out the fuel camshaft (3) and injection pump gear (1).

**(When reassembling)**

- Apply engine oil thinly to the fuel camshaft before installation.

(1) Injection Pump Gear
(2) Fuel Camshaft Stopper
(3) Fuel Camshaft

W1036263

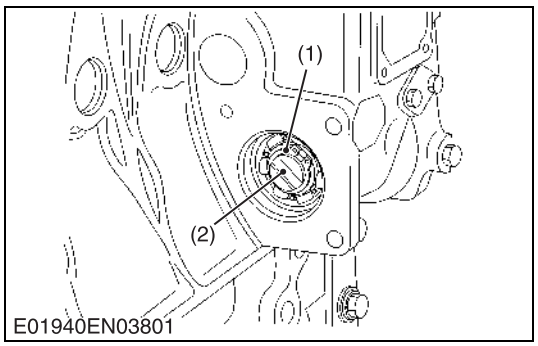


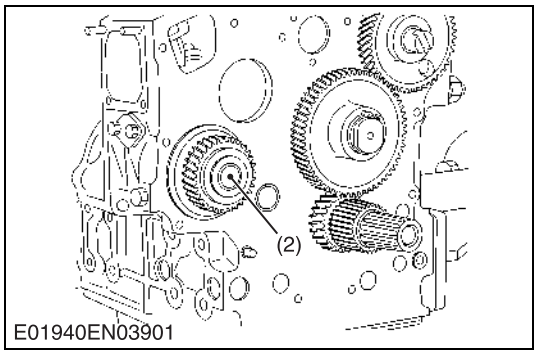


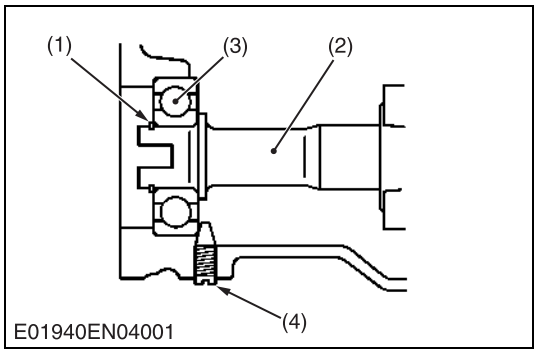


## Governor Shaft

1. Remove the pump cover.
2. Remove the external snap ring (1) from the governor shaft (2).
3. Pull out the governor shaft (2).

**(When reassembling)**

- Make sure assembling the external snap ring of the governor shaft.
- Check the governor shaft for smooth rotation.

■ **IMPORTANT**

- **When replacing the ball bearing of governor shaft, securely fit the ball bearing (3) to the crankcase, apply an adhesive (Three Bond 1324B or equivalent) to the set screw (4), and fasten the screw until its tapered part contacts the circumferential end of the ball bearing.**

(1) External Snap Ring
(2) Governor Shaft
(3) Ball Bearing
(4) Set Screw

W1036385

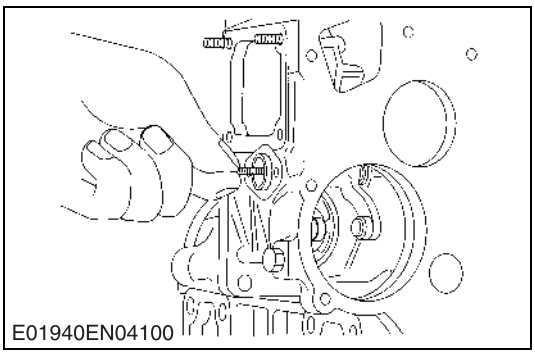


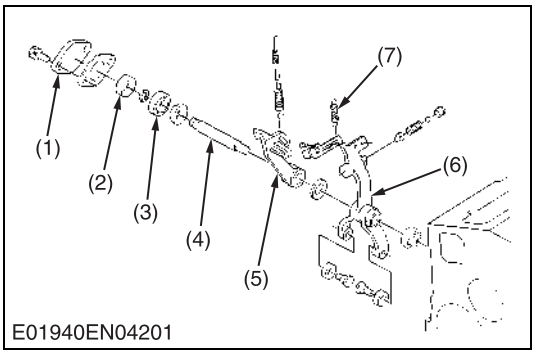


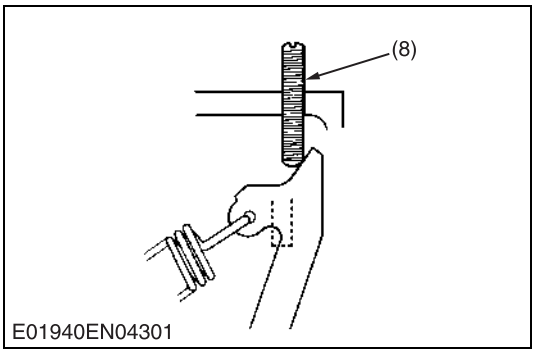


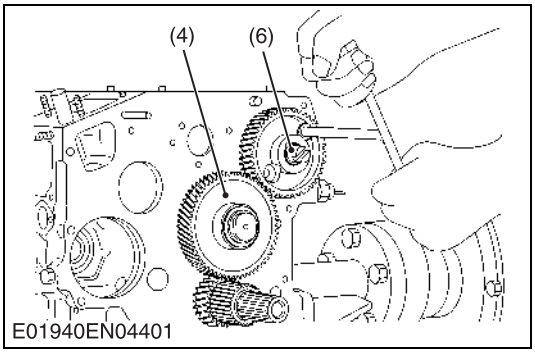


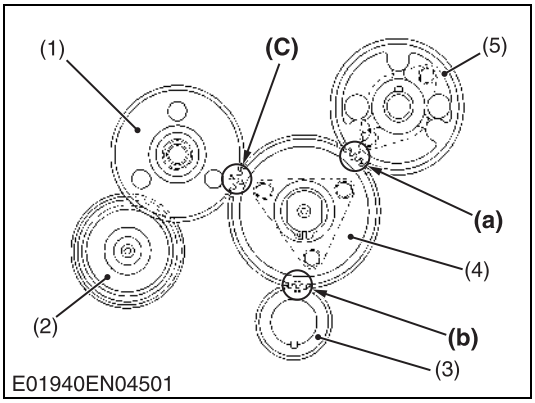


## Fork Lever

1. Remove the start spring (7).
2. Remove the fork lever shaft cover (1).
3. Pull out the fork lever shaft (4), and remove the spacer (2), bearing (3), fork levers 1 (6) and 2 (5).

**(When reassembling)**

- Apply a liquid gasket (Three Bond 1215 or equivalent) to the both sides of the fork lever shaft cover, and fit the fork lever shaft cover with the **"UP"** mark facing upwards.
- Securely fit the start spring.

■ **IMPORTANT**

- **Install the fork lever 2 (5) to position it on the right side of the maximum output limit bolt (8) as shown in the figure.**

(1) Fork Lever Shaft Cover
(2) Spacer
(3) Bearing
(4) Fork Lever Shaft
(5) Fork Lever 2
(6) Fork Lever 1
(7) Start Spring
(8) Maximum Output Limit Bolt

W1036633

## Camshaft and Idle Gear

1. Remove the external snap ring, and then remove the idle gear (4).
2. Remove the camshaft stopper mounting screw, and pull out the camshaft (6).

**(When reassembling)**

- When installing the idle gear, be sure to align the alignment marks **(a)**, **(b)**, **(c)** on the gears.
- Securely fit the external snap ring and stopper.

(1) Injection Pump Gear
(2) Governor Gear
(3) Crank Gear
(4) Idle Gear
(5) Cam Gear
(6) Camshaft

**(a) Alignment Mark (Idle Gear and Cam Gear)**
**(b) Alignment Mark (Idle Gear and Crank Gear)**
**(c) Alignment Mark (Idle Gear and Injection Pump Gear)**

W1036981

## (D) Connecting Rod and Piston

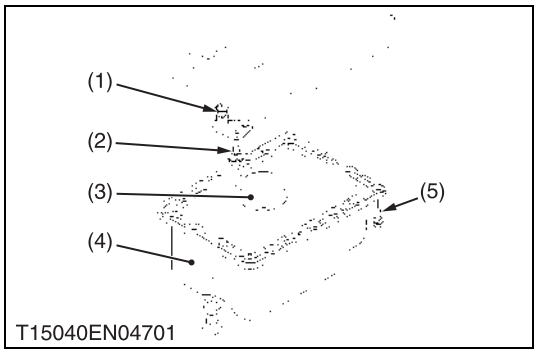

T15040EN04701

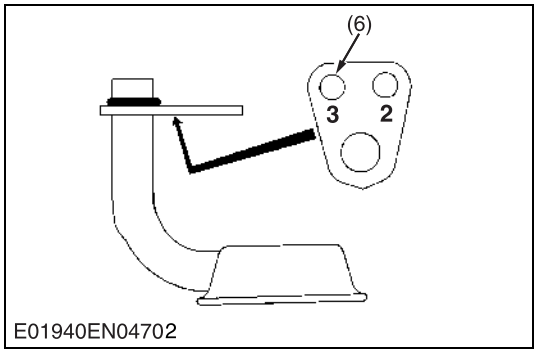

E01940EN04702

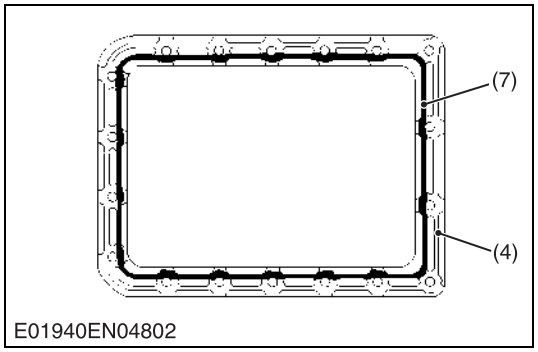

E01940EN04802

### Oil Pan and Oil Strainer

1. Remove the oil pan (4).
2. Remove the oil strainer (3).

**(When reassembling)**

- Install the oil strainer, using care not to damage the O-ring (1).
- Using the hole (6) numbered “3”, install the oil strainer by mounting screw.
- Apply liquid gasket (Three Bond 1270D or 1270C) to the oil pan as shown in the figure.

■ **IMPORTANT**

- **Scrape off the old adhesive completely. Wipe the sealing surface clean using waste cloth soaked with gasoline. Now apply new adhesive 3 to 5 mm (0.12 to 0.20 in.) thick all over the contact surface. Apply the adhesive also on the center of the flange as well as on the inner wall of each bolt hole.**
- **Cut the nozzle of the “fluid sealant” container at its second notch. Apply “fluid sealant” about 5 mm (0.20 in.) thick. Within 20 minutes after the application of fluid sealant, reassemble the components. Wait then for about 30 minutes, and pour oil in the crankcase.**

(1) O-ring
(2) Screw
(3) Oil Strainer
(4) Oil Pan
(5) Oil Pan Mounting Screws
(6) Hole
(7) Fluid sealant

W10265670

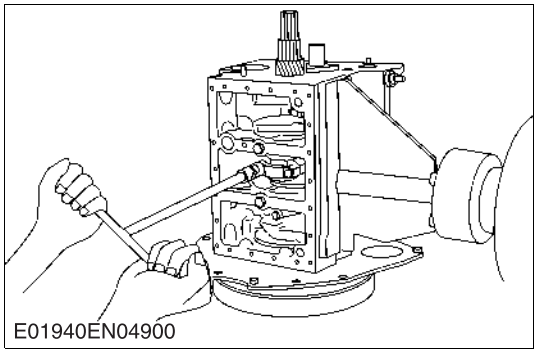
E01940EN04900

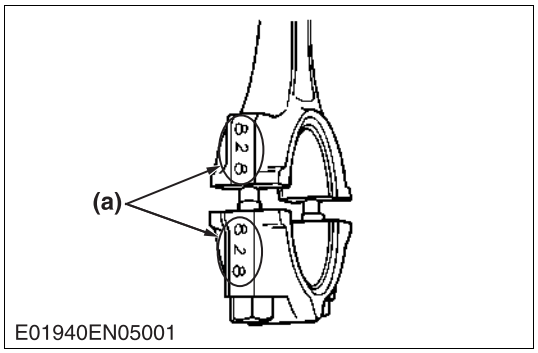

E01940EN05001

### Connecting Rod Cap

1. Remove the connecting rod screws from connecting rod cap.
2. Remove the connecting rod caps.

**(When reassembling)**

- Align the marks **(a)** with each other. (Face the marks toward the injection pump.)
- Apply engine oil to the connecting rod screws and lightly screw it in by hand, then tighten it to the specified torque.
  If the connecting rod screw won’t be screwed in smoothly, clean the threads.
  If the connecting rod screw is still hard to screw in, replace it.
- Do not change the combination of crankpin bearing and connecting rod.

| | | | |
|---|---|---|---|
| Tightening torque | Connecting rod screw | D722<br>D782 | 26.5 to 30.4 N·m<br>2.7 to 3.1 kgf·m<br>19.5 to 22.4 ft-lbs |
| | | D1105 | 41.2 to 46.1 N·m<br>4.2 to 4.7 kgf·m<br>30.3 to 33.9 ft-lbs |

**(a) Mark**

W10275480

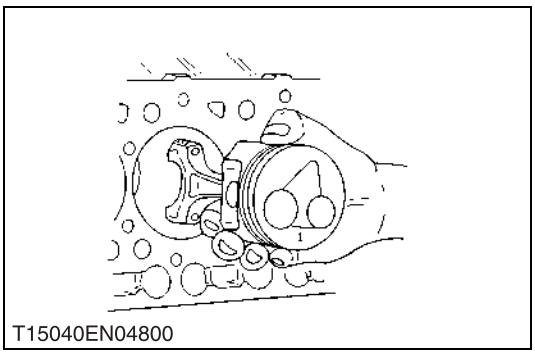
T15040EN04800

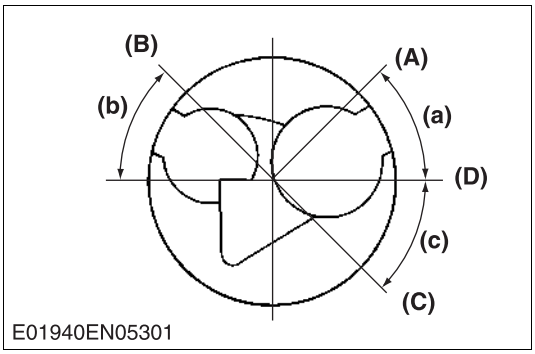

E01940EN05301

**Piston**

1. Turn the flywheel and bring the No. 1 piston to the top dead center.
2. Pull out the piston upward by lightly tapping it from the bottom of the crankcase with the grip of a hammer.

**(When reassembling)**

- Before inserting the piston into the cylinder, apply enough engine oil to the cylinder.
- When inserting the piston into the cylinder, face the mark on the connecting rod to the injection pump.

■ **IMPORTANT**

- **Do not change the combination of cylinder and piston. Make sure of the position of each piston by marking. For example, mark "1" on the No. 1 piston.**
- **When inserting the piston into the cylinder, place the gap of the compression ring 1 on the opposite side of the combustion chamber and stagger the gaps of the compression ring 2 and oil ring making a right angle from the gap of the compression ring 1.**
- **Carefully insert the pistons using a piston ring compressor. Otherwise, their chrome-plated section may be scratched, causing trouble inside the cylinder.**

| | |
|---|---|
| **(A) Top Ring Gap** | **(a) 0.79 rad. (45°)** |
| **(B) Second Ring Gap** | **(b) 0.79 rad. (45°)** |
| **(C) Oil Ring Gap** | **(c) 0.79 rad. (45°)** |
| **(D) Piston Pin Hole** | |

W10277450

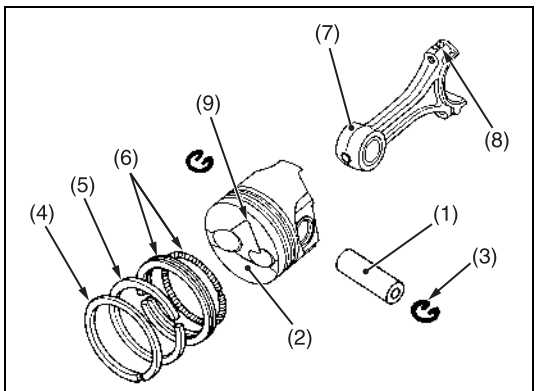

E01940EN05404

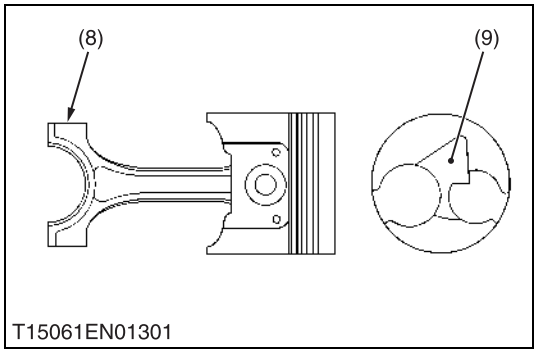

T15061EN01301

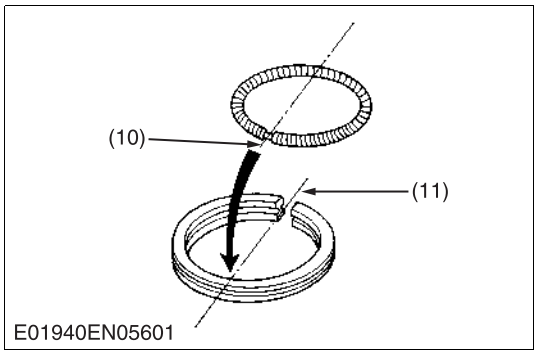

E01940EN05601

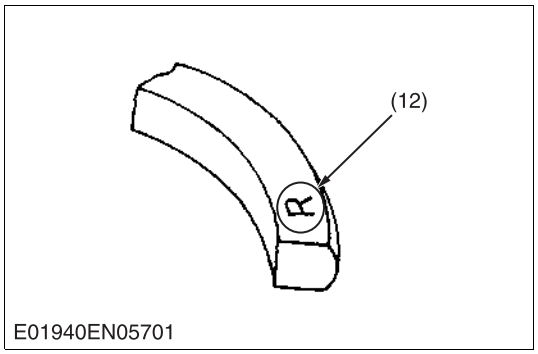

E01940EN05701

## Piston Ring and Connecting Rod

1. Remove the piston rings using a piston ring tool.
2. Remove the piston pin (1), and separate the connecting rod (7) from the piston (2).

**(When reassembling)**

- When installing the rings, assemble the rings so that the manufacturer's mark (12) near the gap faces the top of the piston.
- When installing the oil ring onto the piston, place the expander joint (10) on the opposite side of the oil ring gap (11).
- Apply engine oil to the piston pin.
- When installing the piston pin, immerse the piston in 80 °C (176 °F) oil for 10 to 15 minutes and insert the piston pin to the piston.
- When installing the connecting rod to the piston, align the mark (8) on the connecting rod to the fan-shaped concave (9).

■ **IMPORTANT**

- **Mark the same number on the connecting rod and the piston so as not to change the combination.**

(1) Piston Pin
(2) Piston
(3) Piston Pin Snap Ring
(4) Top Ring
(5) Second Ring
(6) Oil Ring
(7) Connecting Rod
(8) Mark
(9) Fan-Shaped Concave
(10) Expander Joint
(11) Oil Ring Gap
(12) Manufacturer's Mark

W10281670

## (E) Crankshaft

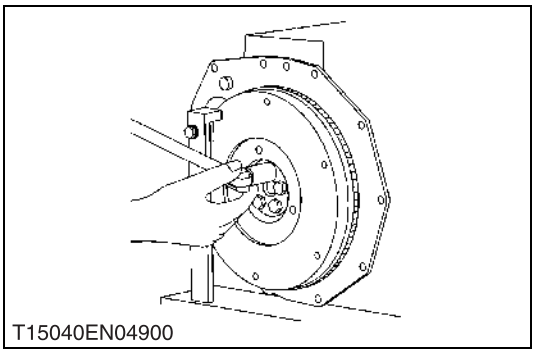
T15040EN04900

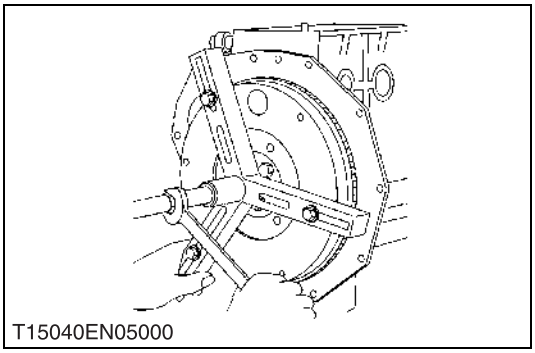
T15040EN05000

**Flywheel**

1. Lock the flywheel not to turn using flywheel stopper.
2. Remove the flywheel screws, except for two which must be loosened and left as they are.
3. Set a flywheel puller (Code No: 07916-32011), and remove the flywheel.

**(When reassembling)**

- Apply engine oil to the flywheel screws. And tighten them.

| | | |
|---|---|---|
| Tightening torque | Flywheel bolt | 53.9 to 58.8 N·m<br>5.5 to 6.0 kgf·m<br>39.8 to 43.4 ft-lbs |

W1030810

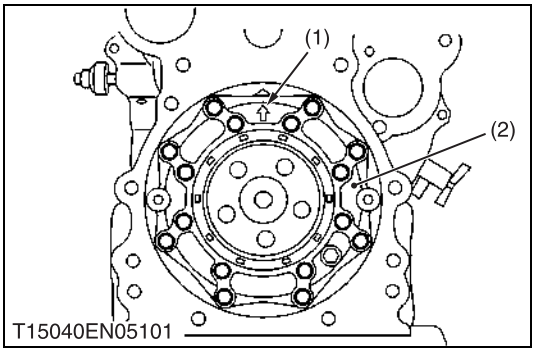

T15040EN05101

**Bearing Case Cover**

1. Remove the bearing case cover mounting screws. First, remove inside screws and then outside screws.

**(When reassembling)**

- Fit the bearing case gasket (3) and the bearing case cover gasket (4) with correct directions.
- Apply liquid-type gasket (Three Bond 1215 or its equivalent) to both sides of a new bearing case cover gasket.
- Install the bearing case cover to position the casting mark "↑" (1) on it upward. (D722 · D782)
- Install the bearing case cover to position the casting mark **"UP"** on it upward. (D1105)
- Apply engine oil to the oil seal lip and take care that it is not rolled when installing.
- Tighten the bearing case cover mounting screws with even force on the diagonal line.

| | | |
|---|---|---|
| Tightening torque | Bearing case cover mounting screw | 9.8 to 11.3 N·m<br>1.00 to 1.15 kgf·m<br>7.2 to 8.3 ft-lbs |

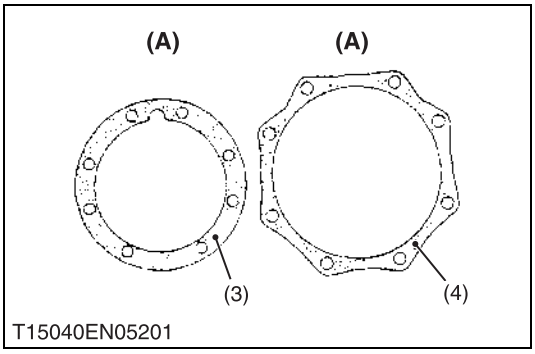

T15040EN05201

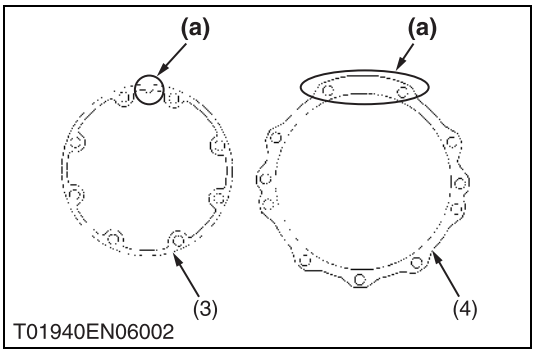

T01940EN06002

(1) Mark
(2) Mark Bearing Case Cover
(3) Bearing Case Gasket
(4) Bearing Case Cover Gasket

**(A) Upside**
**(a) Upside**

W1031168

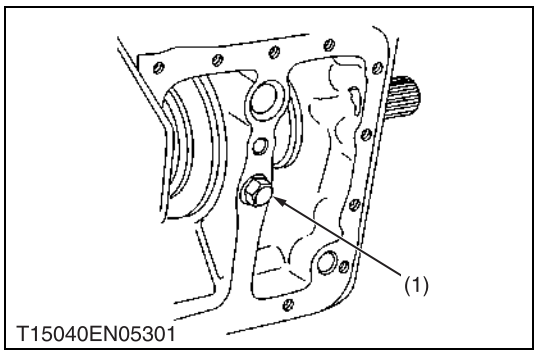

T15040EN05301

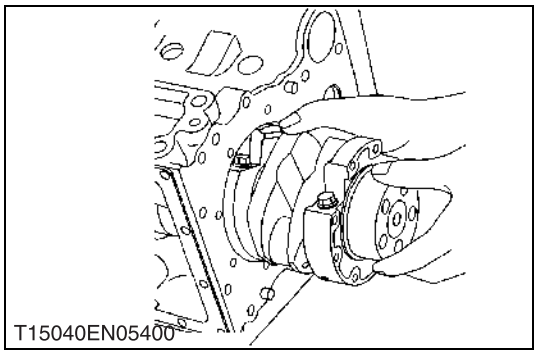
T15040EN05400

**Crankshaft**

1. Remove the main bearing case screw 2 (1).

**(D722 · D1105)**

2. Pull out the crankshaft assembly.

**(D782)**

3. Turn the crankshaft to set the crank pin of the third cylinder to the bottom dead center. Then draw out the crankshaft until the crank pin of the second cylinder comes to the center of the third cylinder.
4. Turn the crankshaft by 2.09 rad. (120°) counterclockwise to set the crank pin of the second cylinder to the bottom dead center. Draw out the crankshaft until the crank pin of the first cylinder comes to the center of the third cylinder.
5. Repeat the above steps to draw out all the crankshafts.

**(When reassembling)**

- Install the crankshaft sub assembly, aligning the screw hole of main bearing case 2 with the screw hole of cylinder block.
- Apply engine oil to the main bearing case screw 2. And tighten it.

| | | | |
|---|---|---|---|
| Tightening torque | Main bearing case screw 2 | D722<br>D782 | 26.5 to 30.4 N·m<br>2.7 to 3.1 kgf·m<br>19.5 to 22.4 ft-lbs |
| | | D1105 | 49.0 to 53.9 N·m<br>5.0 to 5.5 kgf·m<br>36.2 to 39.8 ft-lbs |

(1) Main Bearing Case Screw 2

W1031360

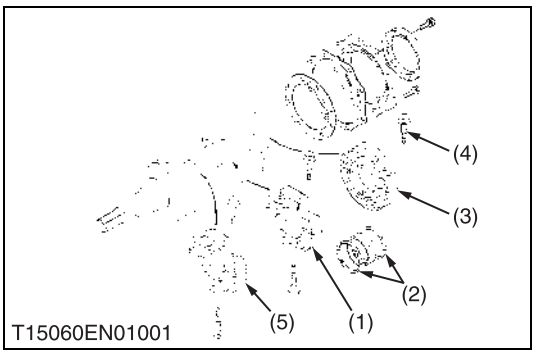


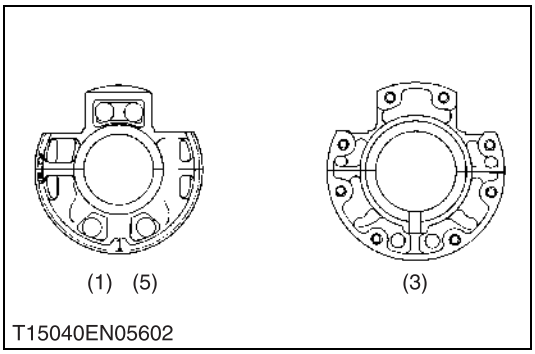


## Main Bearing Case Assembly

1. Remove the two bearing case screws 1 (4), and remove the main bearing case assembly (3), being careful with the thrust bearing (2) and crankshaft bearing 2.
2. Remove the main bearing case assemblies 1 (5), 2 (1).

**(When reassembling)**

- Clean the oil passage in the main bearing case.
- Apply clean engine oil on the crankshaft bearing 2 and thrust bearings.
- Install the main bearing case assemblies in the original positions. Since diameters of main bearing case vary, install them in order of makings (1, 2) from the gear case side.
- When installing the main bearing case assemblies 1 (5), 2 (1), face the mark **"FLYWHEEL"** to the flywheel.
- Be sure to install the thrust bearing (2) with its oil groove facing outward.
- Do not change the combination of crankshaft bearing and main bearing case.
- Confirm that the main bearing case moves smoothly after tightening the main bearing case screw 1 to the specified torque.

| | | | |
|---|---|---|---|
| Tightening torque | Main bearing case screw 1 | D722 | 23.5 to 27.5 N·m<br>2.4 to 2.8 kgf·m<br>17.4 to 20.3 ft-lbs |
| | | D782 | 12.7 to 15.7 N·m<br>1.3 to 1.6 kgf·m<br>9.4 to 11.6 ft-lbs |
| | | D1105 | 29.4 to 34.3 N·m<br>3.0 to 3.5 kgf·m<br>21.7 to 25.3 ft-lbs |

(1) Main Bearing Case Assembly 2
(2) Thrust Bearing (D782 and D1105)
(3) Main Bearing Case Assembly
(4) Bearing Case Screw 1
(5) Main Bearing Case Assembly 1

W1031597

## (3) Servicing

## (A) Cylinder Head and Valve

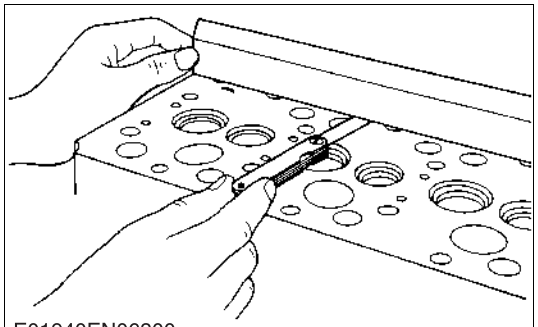

E01940EN06300

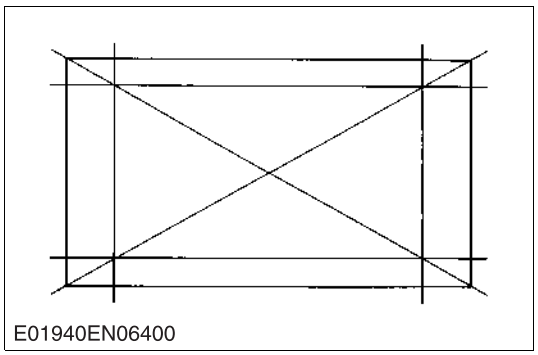

E01940EN06400

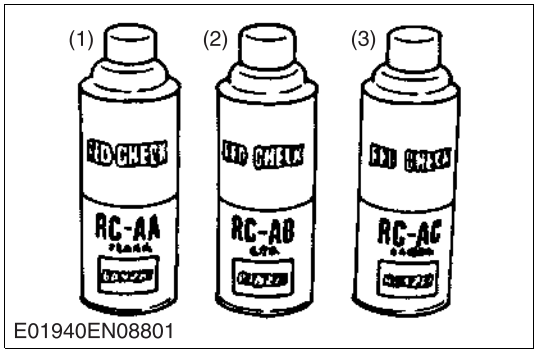


E01940EN08801

**Cylinder Head Surface Flatness**

1. Clean the cylinder head surface.
2. Place a straightedge on the cylinder head's four sides and two diagonal as shown in the figure.
3. Measure the clearance with a feeler gauge.
4. If the measurement exceeds the allowable limit, correct it with a surface grinder.

■ **IMPORTANT**

- **Do not place the straightedge on the combustion chamber.**
- **Be sure to check the valve recessing after correcting.**

| | | |
|---|---|---|
| Cylinder head surface flatness | Allowable limit | 0.05 mm<br>0.0020 in. |

W10301620

**Cylinder Head Flaw**

1. Prepare an air spray red check (Code No. 07909-31371).
2. Clean the surface of the cylinder head with detergent (2).
3. Spray the cylinder head surface with the red permeative liquid (1). Leave it five to ten minutes after spraying.
4. Wash away the red permeative liquid on the cylinder head surface with the detergent (2).
5. Spray the cylinder head surface with white developer (3).
6. If flawed, it can be identified as red marks.

(1) Red Permeative Liquid
(2) Detergent
(3) White Developer

W10303200

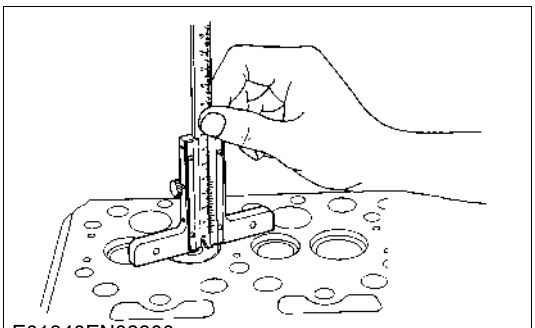
E01940EN08900

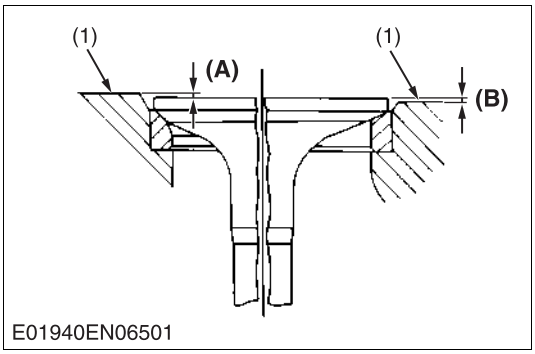

E01940EN06501

## Valve Recessing

1. Clean the cylinder head surface, valve face and valve seat.
2. Insert the valve into the valve guide.
3. Measure the valve recessing with a depth gauge.
4. If the measurement exceeds the allowable limit, replace the valve.
5. If it still exceeds the allowable limit after replacing the valve, correct the valve seat face of the cylinder head with a valve seat cutter (Code No. 07909-33102) or valve seat grinder.
6. Then, correct the cylinder head surface with a surface grinder, or replace the cylinder head.

**[D722 · D782]**

| | | |
|---|---|---|
| Valve recessing | Factory spec. | 0.10 (protrusion) to 0.10 (recessing) mm<br>0.0039 (protrusion) to 0.0039 (recessing) in. |
| | Allowable limit | 0.30 (recessing) mm<br>0.0118 (recessing) in. |

**[D1105]**

| | | |
|---|---|---|
| Valve recessing | Factory spec. | 0.05 (protrusion) to 0.15 (recessing) mm<br>0.0020 (protrusion) to 0.0059 (recessing) in. |
| | Allowable limit | 0.40 (recessing) mm<br>0.0157 (recessing) in. |

(1) Cylinder Head Surface
**(A) Recessing**
**(B) Protrusion**

W10305870

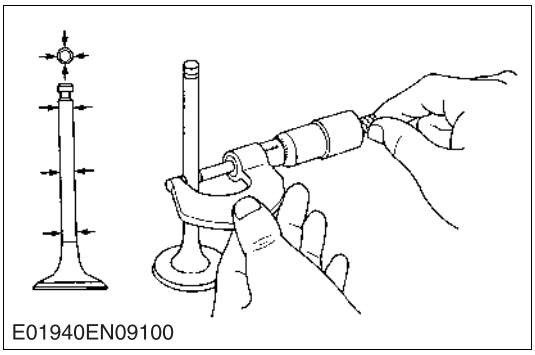
E01940EN09100

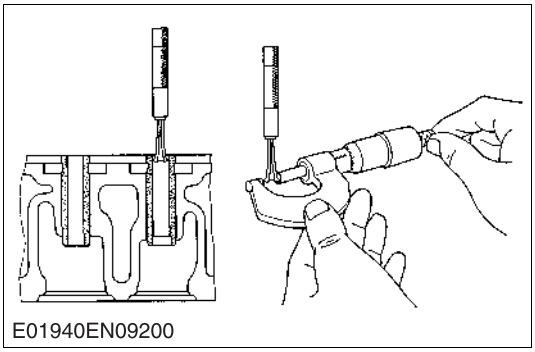
E01940EN09200

## Clearance between Valve Stem and Valve Guide

1. Remove carbon from the valve guide section.
2. Measure the valve stem O.D. with an outside micrometer.
3. Measure the valve guide I.D. with a small hole gauge, and calculate the clearance.
4. If the clearance exceeds the allowable limit, replace the valves. If it still exceeds the allowable limit, replace the valve guide.

**[D722 · D782]**

| | | |
|---|---|---|
| Clearance between valve stem and valve guide | Factory spec. | 0.030 to 0.057 mm<br>0.00118 to 0.00224 in. |
| | Allowable limit | 0.10 mm<br>0.0039 in. |
| Valve stem O.D. | Factory spec. | 5.968 to 5.980 mm<br>0.23496 to 0.23543 in. |
| Valve guide I.D. | Factory spec. | 6.010 to 6.025 mm<br>0.23661 to 0.23720 in. |

**[D1105]**

| | | |
|---|---|---|
| Clearance between valve stem and valve guide | Factory spec. | 0.035 to 0.065 mm<br>0.00138 to 0.00256 in. |
| | Allowable limit | 0.10 mm<br>0.0039 in. |
| Valve stem O.D. | Factory spec. | 6.960 to 6.975 mm<br>0.27402 to 0.27461 in. |
| Valve guide I.D. | Factory spec. | 7.010 to 7.025 mm<br>0.27599 to 0.27657 in. |

W10311740

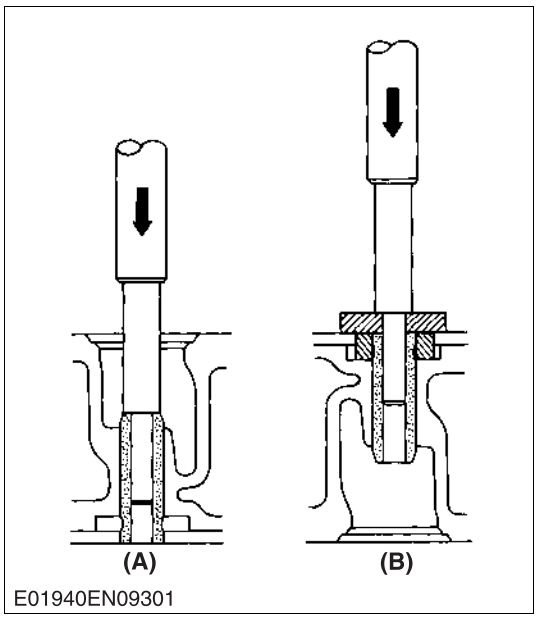


## Replacing Valve Guide

**(When removing)**

1. Press out the used valve guide using a valve guide replacing tool.

**(When installing)**

1. Clean a new valve guide and valve guide bore, and apply engine oil to them.
2. Press in a new valve guide using a valve guide replacing tool.
3. Ream precisely the I.D. of the valve guide to the specified dimension.

| | | | |
|---|---|---|---|
| Valve guide I.D. (Intake and exhaust) | Factory spec. | D722<br>D782 | 6.010 to 6.025 mm<br>0.23661 to 0.23720 in. |
| | | D1105 | 7.010 to 7.025 mm<br>0.27599 to 0.27657 in. |

■ **IMPORTANT**

- **Do not hit the valve guide with a hammer during replacement.**

(1) Intake Valve Guide
(2) Exhaust Valve Guide
**(A) When Removing**
**(B) When Installing**

W10314690

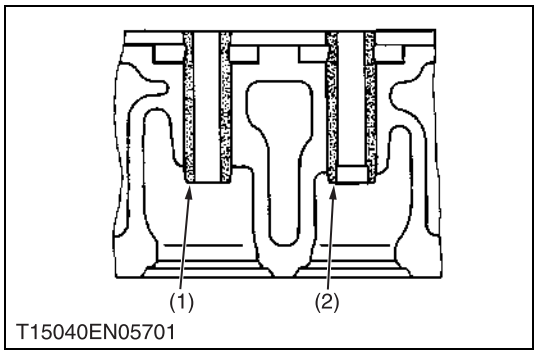


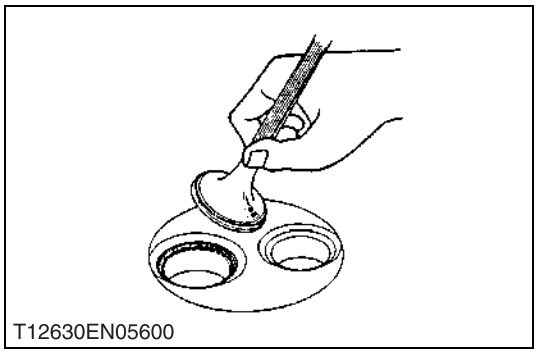


## Valve Seating

1. Coat the valve face lightly with prussian blue and put the valve on its seat to check the contact.
2. If the valve does not seat all the way around the valve seat or the valve contact is less than 70 %, correct the valve seating as follows.
3. If the valve contact does not comply with the reference valve, replace the valve or correct the contact of valve seating.

(1) Correct
(2) Incorrect
(3) Incorrect

W1033143

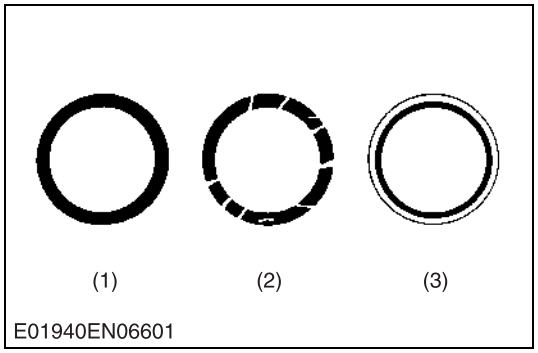

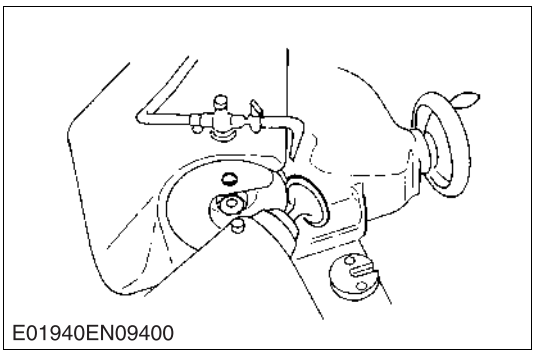
E01940EN09400

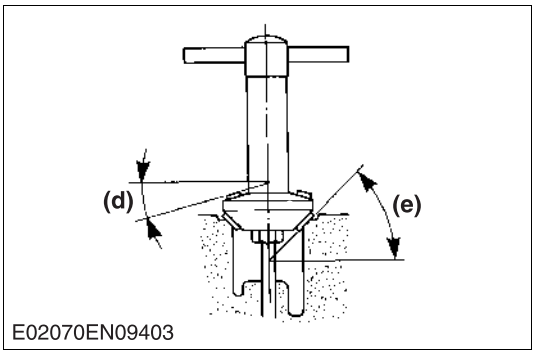

E02070EN09403

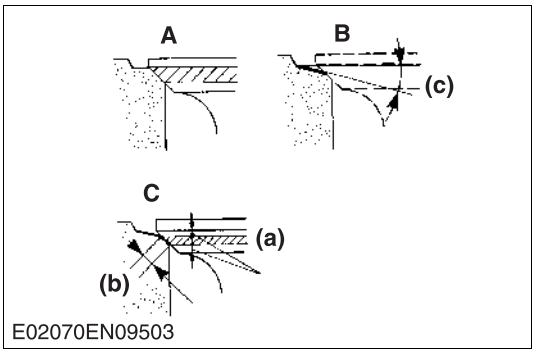

E02070EN09503

## Correcting Valve and Valve Seat

■ **NOTE**
- **Before correcting the valve and seat, check the valve stem and the I.D. of the valve guide section, and repair them if necessary.**
- **After correcting the valve seat, be sure to check the valve recessing.**

**1) Correcting Valve**

1. Correct the valve with a valve refacer.

| | D722 · D782 | D1105 |
|---|---|---|
| Intake valve | 0.785 rad.<br>45° | 1.047 rad.<br>60° |
| Exhaust valve | 0.785 rad.<br>45° | 0.785 rad.<br>45° |

**2) Correcting Valve Seat**

1. Slightly correct the seat surface with a 0.79 rad. (45°) valve seat cutter (Code No. 07909-33102).
2. Fitting the valve, check the contact position of the valve face and seat surface with red lead. (Visual check) [If the valve has been used for a long period, the seat tends to come in contact with the upper side of the valve face.]
3. Grind the upper surface of the valve seat with a 0.26 rad. (15°) valve seat cutter until the valve seat touches to the center of the valve face (so that a equals **b** as shown in the figure).
4. Grind the seat with a 0.79 rad. (45°) valve seat cutter again, and visually recheck the contact between the valve and seat.
5. Repeat steps 3 and 4 until the correct contact is achieved.
6. Continue lapping until the seated rate becomes more than 70 % of the total contact area.

| | | |
|---|---|---|
| Valve seat angle | Factory spec. | 0.79 rad.<br>45.0° |

**(a) Identical Dimensions**
**(b) Valve Seat Width**
**(c) 0.26 rad. (15°)**
**(d) 0.26 rad. (15°)**
**(e) 0.79 rad. (45°)**

**(A) Check Contact**
**(B) Correct Seat Width**
**(C) Check Contact**

W10319540

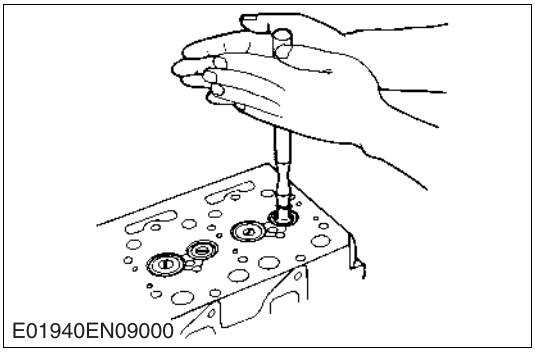
E01940EN09000

## Valve Lapping

1. Apply compound evenly to the valve lapping surface.
2. Insert the valve into the valve guide. Lap the valve onto its seat with a valve flapper or screwdriver.
3. After lapping the valve, wash the compound away and apply oil, then repeat valve lapping with oil.
4. Apply prussian blue to the contact surface to check the seated rate. If it is less than 70 %, repeat valve lapping again.

■ **IMPORTANT**
- **When valve lapping is performed, be sure to check the valve recessing and adjust the valve clearance after assembling the valve.**

W10309820

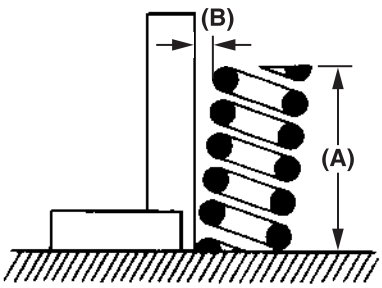

E02070EN09002

## Free Length and Tilt of Valve Spring

1. Measure the free length **(A)** of valve spring with venire calipers. If the measurement is less than the allowable limit, replace it.
2. Put the valve spring on a surface plate, place a square on the side of the valve spring.
3. Check to see if the entire side is in contact with the square. Rotate the valve spring and measure the maximum tilt **(B)**. If the measurement exceeds the allowable limit, replace it. Check the entire surface of the valve spring for scratches. If there is any defect, replace it.

**[D722 · D782]**

| | | |
|---|---|---|
| Free length **(A)** | Factory spec. | 31.3 to 31.8 mm<br>1.232 to 1.252 in. |
| | Allowable limit | 28.4 mm<br>1.118 in. |
| Tilt **(B)** | Allowable limit | 1.2 mm<br>0.047 in. |

**[D1105]**

| | | |
|---|---|---|
| Free length **(A)** | Factory spec. | 37.0 to 37.5 mm<br>1.457 to 1.476 in. |
| | Allowable limit | 36.5 mm<br>1.437 in. |
| Tilt **(B)** | Allowable limit | 1.0 mm<br>0.039 in. |

W11157830

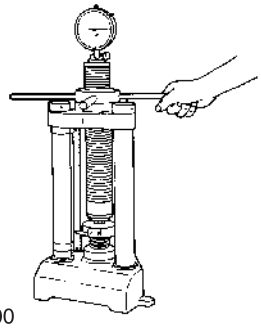
E02070EN09100

## Valve Spring Setting Load

1. Place the valve spring on a tester and compress it to the same length it is actually compressed the engine.
2. Read the compression load on the gauge.
3. If the measurement is less than the allowable limit, replace it.

**[D722 · D782]**

| | | |
|---|---|---|
| Setting load /<br>Setting length | Factory spec. | 64.7 N / 27.0 mm<br>6.6 kgf / 27.0 mm<br>14.6 lbs / 1.063 in. |
| | Allowable limit | 54.9 N / 27.0 mm<br>5.6 kgf / 27.0 mm<br>12.3 lbs / 1.063 in. |

**[D1105]**

| | | |
|---|---|---|
| Setting load /<br>Setting length | Factory spec. | 117.6 N / 31.0 mm<br>12.0 kgf / 31.0 mm<br>26.4 lbs / 1.220 in. |
| | Allowable limit | 100.0 N / 31.0 mm<br>10.2 kgf / 31.0 mm<br>22.5 lbs / 1.220 in. |

W11177330

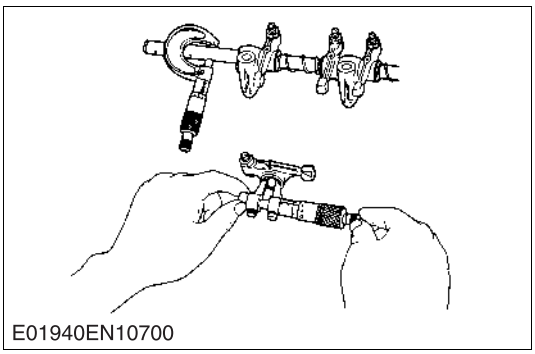
E01940EN10700

## Oil Clearance between Rocker Arm and Rocker Arm Shaft

1. Measure the rocker arm shaft O.D. with an outside micrometer.
2. Measure the rocker arm I.D. with an inside micrometer, and then calculate the oil clearance.
3. If the oil clearance exceeds the allowable limit, replace the rocker arm and measure the oil clearance again. If it still exceeds the allowable limit, replace also the rocker arm shaft.

**[D722 · D782]**

| | | |
|---|---|---|
| Oil clearance between rocker arm and rocker arm shaft | Factory spec. | 0.016 to 0.045 mm<br>0.00063 to 0.00177 in. |
| | Allowable limit | 0.15 mm<br>0.0059 in. |
| Rocker arm shaft O.D. | Factory spec. | 10.473 to 10.484 mm<br>0.41232 to 0.41276 in. |
| Rocker arm I.D. | Factory spec. | 10.500 to 10.518 mm<br>0.41339 to 0.41410 in. |

**[D1105]**

| | | |
|---|---|---|
| Oil clearance between rocker arm and rocker arm shaft | Factory spec. | 0.016 to 0.045 mm<br>0.00063 to 0.00177 in. |
| | Allowable limit | 0.10 mm<br>0.0039 in. |
| Rocker arm shaft O.D. | Factory spec. | 11.973 to 11.984 mm<br>0.47138 to 0.47181 in. |
| Rocker arm I.D. | Factory spec. | 12.000 to 12.018 mm<br>0.47244 to 0.47315 in. |

W11199710

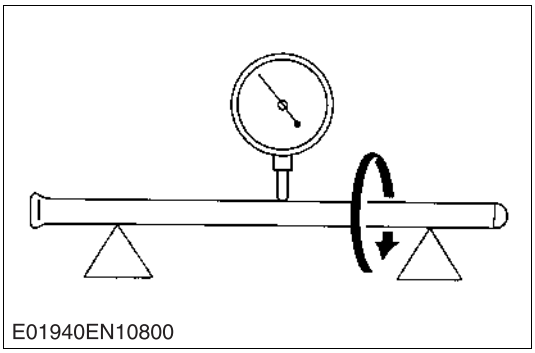
E01940EN10800

## Push Rod Alignment

1. Place the push rod on V blocks.
2. Measure the push rod alignment.
3. If the measurement exceeds the allowable limit, replace the push rod.

| | | |
|---|---|---|
| Push rod alignment | Allowable limit | 0.25 mm<br>0.0098 in. |

W11220210

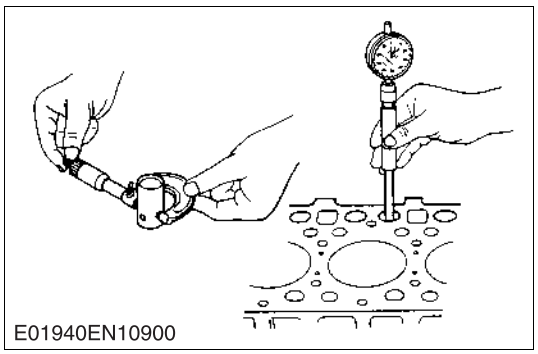
E01940EN10900

## Oil Clearance between Tappet and Tappet Guide Bore

1. Measure the tappet O.D. with an outside micrometer.
2. Measure the I.D. of the tappet guide bore with a cylinder gauge, and calculate the oil clearance.
3. If the oil clearance exceeds the allowable limit or the tappet is damaged, replace the tappet.

**[D722 · D782]**

| | | |
|---|---|---|
| Oil clearance between tappet and tappet guide bore | Factory spec. | 0.016 to 0.052 mm<br>0.00063 to 0.00205 in. |
| | Allowable limit | 0.10 mm<br>0.0039 in. |
| Tappet O.D. | Factory spec. | 17.966 to 17.984 mm<br>0.70732 to 0.70803 in. |
| Tappet guide bore I.D. | Factory spec. | 18.000 to 18.018 mm<br>0.70866 to 0.70937 in. |

**[D1105]**

| | | |
|---|---|---|
| Oil clearance between tappet and tappet guide bore | Factory spec. | 0.020 to 0.062 mm<br>0.00079 to 0.00244 in. |
| | Allowable limit | 0.07 mm<br>0.0028 in. |
| Tappet O.D. | Factory spec. | 19.959 to 19.980 mm<br>0.78579 to 0.78661 in. |
| Tappet guide bore I.D. | Factory spec. | 20.000 to 20.021 mm<br>0.78740 to 0.78823 in. |

W11231410

## (B) Timing Gears, Camshaft and Fuel Camshaft

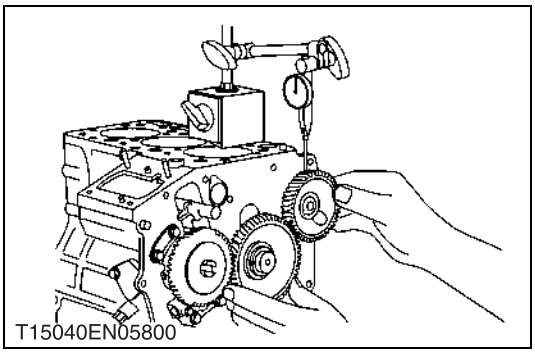


**Timing Gear Backlash**

1. Set a dial indicator (lever type) with its tip on the gear tooth.
2. Move the gear to measure the backlash, holding its mating gear.
3. If the backlash exceeds the allowable limit, check the oil clearance of the shaft and the gear.
4. If the oil clearance is proper, replace the gear.

**[D722 · D782]**

| | | |
|---|---|---|
| Backlash between idle gear and crank gear | Factory spec. | 0.043 to 0.124 mm<br>0.00169 to 0.00488 in. |
| | Allowable limit | 0.15 mm<br>0.0059 in. |
| Backlash between idle gear and cam gear | Factory spec. | 0.047 to 0.123 mm<br>0.00185 to 0.00484 in. |
| | Allowable limit | 0.15 mm<br>0.0059 in. |
| Backlash between idle gear and injection pump gear | Factory spec. | 0.046 to 0.124 mm<br>0.00185 to 0.00488 in. |
| | Allowable limit | 0.15 mm<br>0.0059 in. |
| Backlash between oil pump drive gear and crank gear | Factory spec. | 0.041 to 0.123 mm<br>0.00161 to 0.00484 in. |
| | Allowable limit | 0.15 mm<br>0.0059 in. |

**[D1105]**

| | | |
|---|---|---|
| Backlash between idle gear and crank gear | Factory spec. | 0.032 to 0.115 mm<br>0.00120 to 0.00453 in. |
| | Allowable limit | 0.15 mm<br>0.0059 in. |
| Backlash between idle gear and cam gear | Factory spec. | 0.036 to 0.114 mm<br>0.00142 to 0.00449 in. |
| | Allowable limit | 0.15 mm<br>0.0059 in. |
| Backlash between idle gear and injection pump gear | Factory spec. | 0.034 to 0.116 mm<br>0.00134 to 0.00457 in. |
| | Allowable limit | 0.15 mm<br>0.0059 in. |
| Backlash between injection pump gear and governor gear | Factory spec. | 0.030 to 0.117 mm<br>0.00118 to 0.00461 in. |
| | Allowable limit | 0.15 mm<br>0.0059 in. |

W11264830

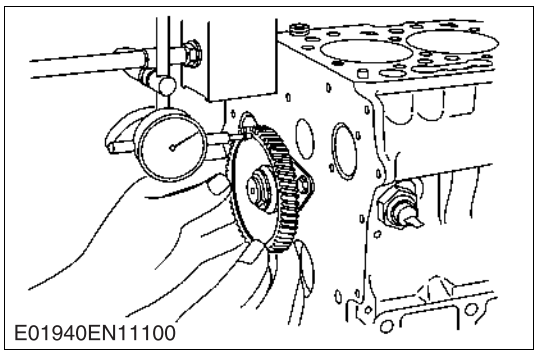
E01940EN11100

## Idle Gear Side Clearance

1. Set a dial indicator with its tip on the idle gear.
2. Measure the side clearance by moving the idle gear to the front and rear.
3. If the measurement exceeds the allowable limit, replace the idle gear collar.

**[D722 · D782]**

| | | |
|---|---|---|
| Idle gear side clearance | Factory spec. | 0.13 to 0.49 mm<br>0.0051 to 0.0199 in. |
| | Allowable limit | 0.60 mm<br>0.0236 in. |

**[D1105]**

| | | |
|---|---|---|
| Idle gear side clearance | Factory spec. | 0.20 to 0.51 mm<br>0.0079 to 0.0201 in. |
| | Allowable limit | 0.80 mm<br>0.0315 in. |

W11286770

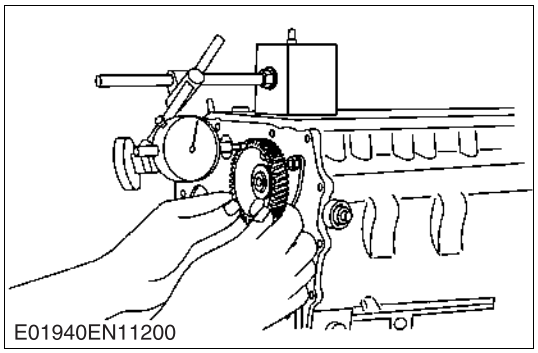
E01940EN11200

## Camshaft Side Clearance

1. Set a dial indicator with its tip on the camshaft.
2. Measure the side clearance by moving the cam gear to the font and rear.
3. If the measurement exceeds the allowable limit, replace the camshaft stopper.

**[D722 · D782]**

| | | |
|---|---|---|
| Camshaft side clearance | Factory spec. | 0.15 to 0.31 mm<br>0.0059 to 0.0122 in. |
| | Allowable limit | 0.50 mm<br>0.0197 in. |

**[D1105]**

| | | |
|---|---|---|
| Camshaft side clearance | Factory spec. | 0.07 to 0.22 mm<br>0.0028 to 0.0087 in. |
| | Allowable limit | 0.30 mm<br>0.0118 in. |

W11299720

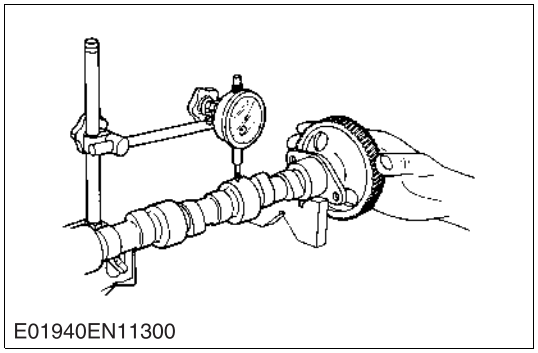
E01940EN11300

## Camshaft Alignment

1. Support the camshaft with V blocks on the surface plate at both end journals.
2. Set a dial indicator with its tip on the intermediate journal.
3. Measure the camshaft alignment.
4. If the measurement exceeds the allowable limit, replace the camshaft.

| | | |
|---|---|---|
| Camshaft alignment | Allowable limit | 0.01 mm<br>0.0004 in. |

W11312720

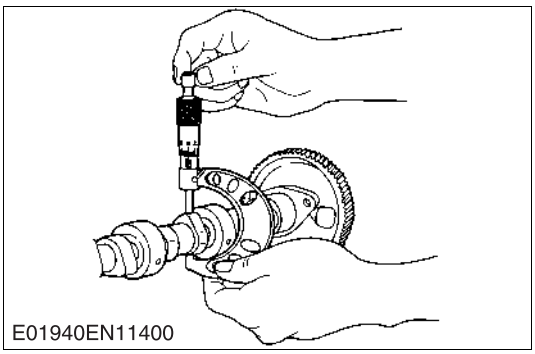
E01940EN11400

## Cam Height

1. Measure the height of the cam at its highest point with an outside micrometer.
2. If the measurement is less than the allowable limit, replace the camshaft.

**[D722 · D782]**

| | | |
|---|---|---|
| Cam height of intake and exhaust | Factory spec. | 26.88 mm<br>1.0583 in. |
| | Allowable limit | 26.83 mm<br>1.0563 in. |

**[D1105]**

| | | |
|---|---|---|
| Cam height of intake | Factory spec. | 28.80 mm<br>1.1339 in. |
| | Allowable limit | 28.75 mm<br>1.1319 in. |
| Cam height of exhaust | Factory spec. | 29.00 mm<br>1.1417 in. |
| | Allowable limit | 28.95 mm<br>1.1398 in. |

W11324040

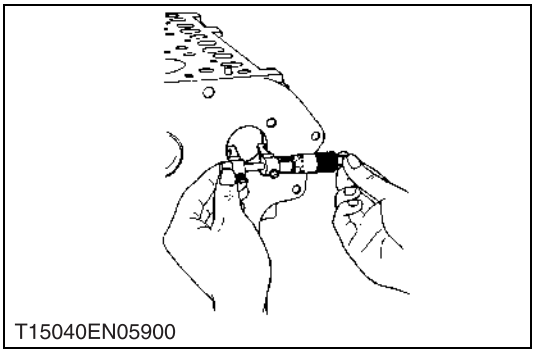
T15040EN05900

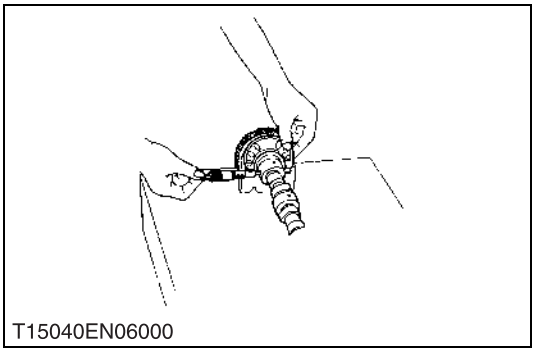
T15040EN06000

## Oil Clearance of Camshaft Journal

1. Measure the camshaft journal O.D. with an outside micrometer.
2. Measure the camshaft bearing I.D. (cylinder block bore I.D.) for camshaft with an inside micrometer.
   Calculate the oil clearance.
3. If the oil clearance exceeds the allowable limit, replace the camshaft.

**[D722 · D782]**

| | | |
|---|---|---|
| Oil clearance of camshaft journal | Factory spec. | 0.050 to 0.091 mm<br>0.00197 to 0.00358 in. |
| | Allowable limit | 0.15 mm<br>0.0059 in. |
| Camshaft journal O.D. | Factory spec. | 32.934 to 32.950 mm<br>1.29661 to 1.29724 in. |
| Camshaft Bearing I.D. (Cylinder block bore I.D.) | Factory spec. | 33.000 to 33.025 mm<br>1.29921 to 1.30020 in. |

**[D1105]**

| | | |
|---|---|---|
| Oil clearance of camshaft journal | Factory spec. | 0.050 to 0.091 mm<br>0.00197 to 0.00358 in. |
| | Allowable limit | 0.15 mm<br>0.0059 in. |
| Camshaft journal O.D. | Factory spec. | 35.934 to 35.950 mm<br>1.41473 to 1.41535 in. |
| Cylinder block bore I.D. | Factory spec. | 36.000 to 36.025 mm<br>1.41732 to 1.41830 in. |

W11335580

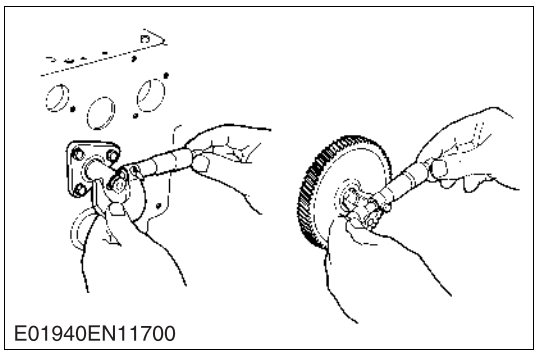
E01940EN11700

## Oil Clearance between Idle Gear Shaft and Idle Gear Bushing

1. Measure the idle gear shaft O.D. with an outside micrometer.
2. Measure the idle gear bushing I.D. with an inside micrometer, and calculate the oil clearance.
3. If the oil clearance exceeds the allowable limit, replace the bushing.
   If it still exceeds the allowable limit, replace the idle gear shaft.

**[D722 · D782]**

| | | |
|---|---|---|
| Oil clearance between idle gear shaft and idle gear bushing | Factory spec. | 0.020 to 0.084 mm<br>0.00079 to 0.00331 in. |
| | Allowable limit | 0.10 mm<br>0.0039 in. |
| Idle gear shaft O.D. | Factory spec. | 19.967 to 19.980 mm<br>0.78610 to 0.78661 in. |
| Idle gear bushing I.D. | Factory spec. | 20.000 to 20.051 mm<br>0.78740 to 0.78941 in. |

**[D1105]**

| | | |
|---|---|---|
| Oil clearance between idle gear shaft and idle gear bushing | Factory spec. | 0.020 to 0.054 mm<br>0.00079 to 0.00213 in. |
| | Allowable limit | 0.10 mm<br>0.0039 in. |
| Idle gear shaft O.D. | Factory spec. | 25.967 to 25.980 mm<br>1.02232 to 1.02283 in. |
| Idle gear bushing I.D. | Factory spec. | 26.000 to 26.021 mm<br>1.02362 to 1.02445 in. |

W11356150

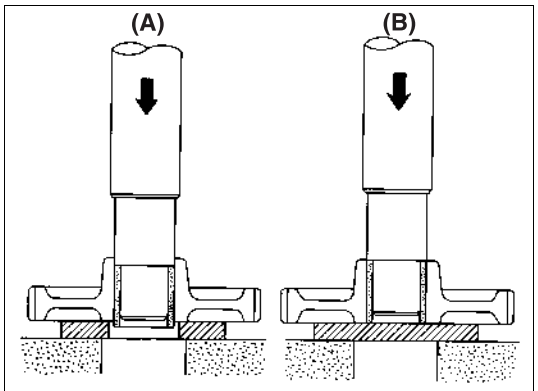

E01940EN11801

## Replacing Idle Gear Bushing

**(When removing)**

1. Press out the used idle gear bushing using an idle gear bushing replacing tool.

**(When installing)**

1. Clean a new idle gear bushing and idle gear bore, and apply engine oil to them.
2. Press in a new brushing using an idle gear bushing replacing tool, until it is flush with the end of the idle gear.

**(A) When Removing** **(B) When Installing**

W11373220

## (C) Piston and Connecting Rod

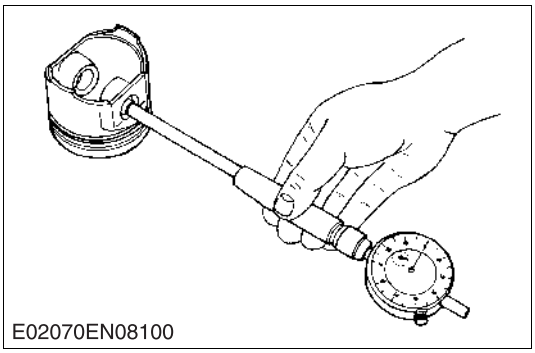
E02070EN08100

**Piston Pin Bore I.D.**

1. Measure the piston pin bore I.D. in both the horizontal and vertical directions with a cylinder gauge.
2. If the measurement exceeds the allowable limit, replace the piston.

**[D722 · D782]**

| | | |
|---|---|---|
| Piston pin bore I.D. | Factory spec. | 20.000 to 20.013 mm<br>0.78740 to 0.78791 in. |
| | Allowable limit | 20.05 mm<br>0.7894 in. |

**[D1105]**

| | | |
|---|---|---|
| Piston pin bore I.D. | Factory spec. | 22.000 to 22.013 mm<br>0.86614 to 0.86665 in. |
| | Allowable limit | 22.05 mm<br>0.8681 in. |

W11406200

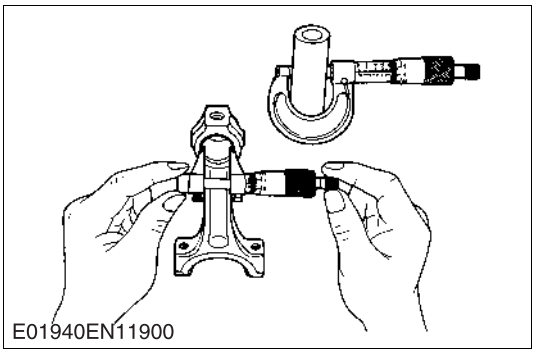
E01940EN11900

**Oil Clearance between Piton Pin and Small End Bushing**

1. Measure the piston pin O.D. where it contacts the bushing with an outside micrometer.
2. Measure the small end bushing I.D. with an inside micrometer, and calculate the oil clearance.
3. If the oil clearance exceeds the allowable limit, replace the bushing. If it still exceeds the allowable limit, replace the piston pin.

**[D722 · D782]**

| | | |
|---|---|---|
| Oil clearance between piston pin and small end bushing | Factory spec. | 0.014 to 0.038 mm<br>0.00055 to 0.00150 in. |
| | Allowable limit | 0.10 mm<br>0.0039 in. |
| Piston pin O.D. | Factory spec. | 20.002 to 20.011 mm<br>0.78748 to 0.78783 in. |
| Small end bushing I.D. | Factory spec. | 20.025 to 20.040 mm<br>0.78839 to 0.78897 in. |

**[D1105]**

| | | |
|---|---|---|
| Oil clearance between piston pin and small end bushing | Factory spec. | 0.014 to 0.038 mm<br>0.00055 to 0.00150 in. |
| | Allowable limit | 0.15 mm<br>0.0059 in. |
| Piston pin O.D. | Factory spec. | 22.002 to 22.011 mm<br>0.86622 to 0.86657 in. |
| Small end bushing I.D. | Factory spec. | 22.025 to 22.040 mm<br>0.86713 to 0.86771 in. |

W11420110

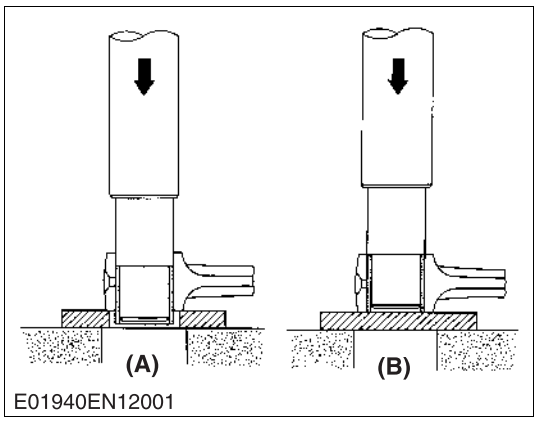


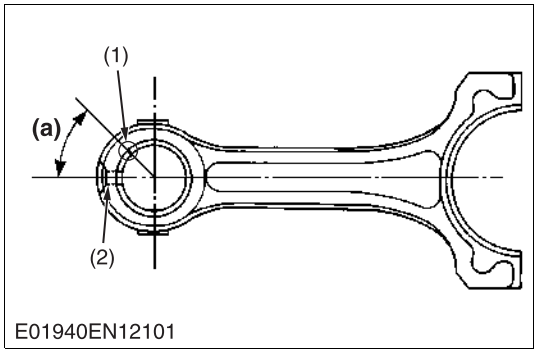


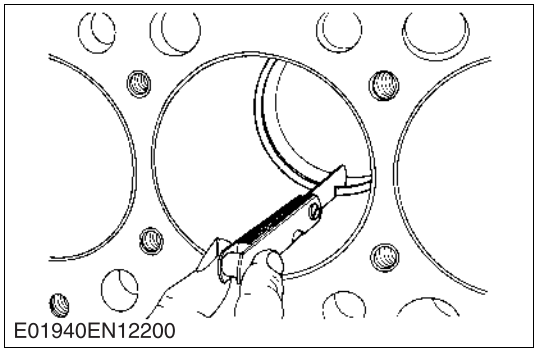


## Replacing Small End Bushing

**(When removing)**

1. Press out the used bushing using a small end bushing replacing tool.

**(When installing)**

1. Clean a new small end bushing and bore, and apply engine oil to them.
2. Insert a new bushing onto the tool and press-fit it with a press so that the seam (1) of bushing positions as shown in the figure, until it is flash with the connecting rod.
3. Drill a hole to the bushing with aligning the oil hole (2) of connecting rod using 4.0 mm dia. (0.157 in. dia.) drill.

■ **NOTE**

- **Be sure to chamfer the oil hole circumference with an oil stone.**

(1) Seam
(2) Oil Hole

**(A) When Removing**
**(B) When Installing**

**(a) 0.79 rad. (45°)**

W11437590

## Piston Ring Gap

1. Insert the piston ring into the lower part of the cylinder (the least worn out part) with a piston ring compressor and piston.
2. Measure the ring gap with a feeler gauge.
3. If the measurement exceeds the allowable limit, replace the piston ring.

**[D722 · D782]**

| | | | |
|---|---|---|---|
| Piston ring gap | Factory spec. | Top ring<br>Second ring | 0.25 to 0.40 mm<br>0.0098 to 0.0157 in. |
| | | Oil ring | 0.15 to 0.30 mm<br>0.0059 to 0.0118 in. |
| | Allowable limit | Top ring<br>Second ring | 1.25 mm<br>0.0492 in. |
| | | Oil ring | |

**[D1105]**

| | | | |
|---|---|---|---|
| Piston ring gap | Factory spec. | Top ring<br>Second ring | 0.25 to 0.40 mm<br>0.0098 to 0.0157 in. |
| | | Oil ring | 0.25 to 0.45 mm<br>0.0098 to 0.0177 in. |
| | Allowable limit | Top ring<br>Second ring | 1.25 mm<br>0.0492 in. |
| | | Oil ring | |

W11466710

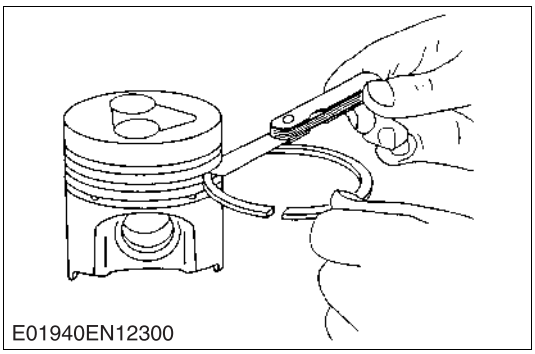
E01940EN12300

## Clearance between Piston Ring and Piston Ring Groove

1. Clean the rings and the ring grooves, and install each ring in its groove.
2. Measure the clearance between the ring and the groove with a feeler gauge.
3. If the clearance exceeds the allowable limit, replace the piston ring.
4. If the clearance still exceeds the allowable limit after replacing the ring, replace the piston.

**[D722 · D782]**

| | | | |
|---|---|---|---|
| Clearance between piston ring and piston ring groove | Factory spec. | Second ring | 0.090 to 0.120 mm<br>0.00354 to 0.00472 in. |
| | | Oil ring | 0.04 to 0.08 mm<br>0.0016 to 0.0031 in. |
| | Allowable limit | Second ring | 0.15 mm<br>0.0059 in. |
| | | Oil ring | |

**[D1105]**

| | | | |
|---|---|---|---|
| Clearance between piston ring and piston ring groove | Factory spec. | Second ring | 0.085 to 0.112 mm<br>0.00335 to 0.00441 in. |
| | | Oil ring | 0.020 to 0.055 mm<br>0.00079 to 0.00217 in. |
| | Allowable limit | Second ring | 0.20 mm<br>0.0079 in. |
| | | Oil ring | 0.15 mm<br>0.0059 in. |

W11485500

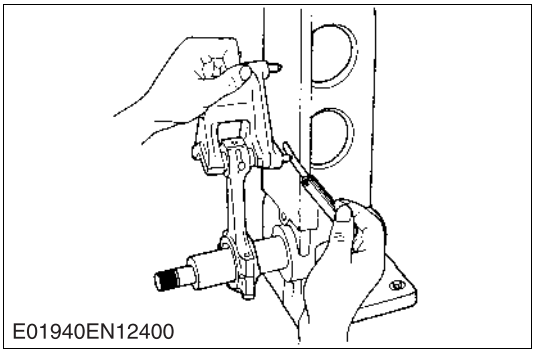
E01940EN12400

## Connecting Rod Alignment

■ **NOTE**

- **Since the I.D. of the connecting rod small end bushing is the basis of this check, check the bushing for wear beforehand.**

1. Remove the crankpin bearing, and install the connecting rod cap.
2. Install the piston pin in the connecting rod.
3. Install the connecting rod on the connecting rod alignment tool (Code No. 07909-31661).
4. Put a gauge over the piston pin, and move it against the face plate.
5. If the gauge does not fit squarely against the face plate, measure the space between the pin of the gauge and the face plate.
6. If the measurement exceeds the allowable limit, replace the connecting rod.

| | | |
|---|---|---|
| Space between gauge pin and face plate | Allowable limit | 0.05 mm<br>0.0020 in. |

W11499650

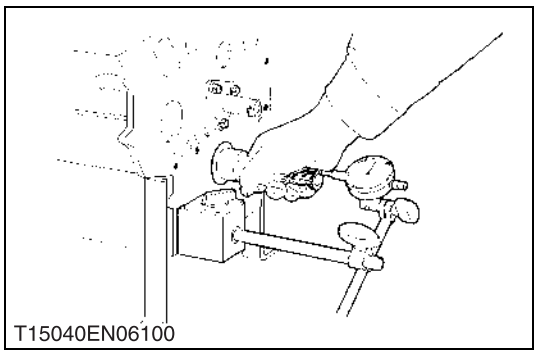
T15040EN06100

## Crankshaft Side Clearance

1. Set a dial indicator with its tip on the end of the crankshaft.
2. Measure the side clearance by moving the crankshaft to the front and rear.
3. If the measurement exceeds the allowable limit, replace the main bearing case assembly. (D722)
4. If the same size bearing is useless because of the crankshaft journal wear, replace it with an oversize one referring to the table and the figure. (D782 and D1105)

| | | | |
|---|---|---|---|
| Crankshaft side clearance | Factory spec. | D722<br>D1105 | 0.15 to 0.25 mm<br>0.0059 to 0.0098 in. |
| | | D782 | 0.15 to 0.31 mm<br>0.0059 to 0.0122 in. |
| | Allowable limit | | 0.50 mm<br>0.0197 in. |

- Oversize thrust bearing assembly

**(Reference for D782)**

| Oversize | Bearing | Code Number | Marking |
|---|---|---|---|
| 0.2 mm<br>0.008 in. | Thrust bearing 1 02 | 15261-23951 | 020 OS |
| | Thrust bearing 2 02 | 15261-23971 | 020 OS |
| 0.4 mm<br>0.016 in. | Thrust bearing 1 04 | 15261-23961 | 040 OS |
| | Thrust bearing 2 04 | 15261-23981 | 040 OS |

**(Reference for D1105)**

| Oversize | Bearing | Code Number | Marking |
|---|---|---|---|
| 0.2 mm<br>0.008 in. | Thrust bearing 1 02 | 15521-23950 | 020 OS |
| | Thrust bearing 2 02 | 19202-23970 | 020 OS |
| 0.4 mm<br>0.016 in. | Thrust bearing 1 04 | 15521-23960 | 040 OS |
| | Thrust bearing 2 04 | 19202-23980 | 040 OS |

W11586190

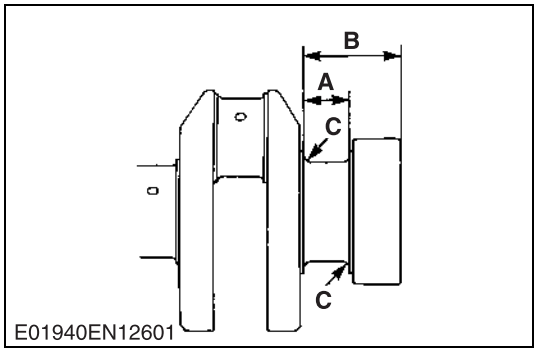

E01940EN12601

## Crankshaft Side Clearance (Continued)

- Oversize dimensions of crankshaft journal

**(Reference for D782)**

| Oversize | 0.2 mm<br>0.008 in. | 0.4 mm<br>0.016 in. |
|---|---|---|
| Dimension **A** | 23.40 to 23.45 mm<br>0.9134 to 0.9154 in. | 23.80 to 23.85 mm<br>0.9213 to 0.9232 in. |
| Dimension **B** | 46.1 to 46.3 mm<br>1.815 to 1.823 in. | 46.3 to 46.5 mm<br>1.823 to 1.831 in. |
| Dimension **C** | 1.8 to 2.2 mm radius<br>0.071 to 0.087 in. radius | 1.8 to 2.2 mm radius<br>0.071 to 0.087 in. radius |
| The crankshaft journal must be fine-finished to higher than ∇∇∇∇. (0.8-S) | | |

**(Reference for D1105)**

| Oversize | 0.2 mm<br>0.008 in. | 0.4 mm<br>0.016 in. |
|---|---|---|
| Dimension **A** | 28.20 to 28.25 mm<br>1.1102 to 1.1122 in. | 28.40 to 28.45 mm<br>1.1181 to 1.1201 in. |
| Dimension **B** | 51.5 to 51.7 mm<br>2.028 to 2.035 in. | 51.6 to 51.8 mm<br>2.031 to 2.039 in. |
| Dimension **C** | 2.3 to 2.7 mm radius<br>0.091 to 0.106 in. radius | 2.3 to 2.7 mm radius<br>0.091 to 0.106 in. radius |
| The crankshaft journal must be fine-finished to higher than ∇∇∇∇. (0.8-S) | | |

W1056906

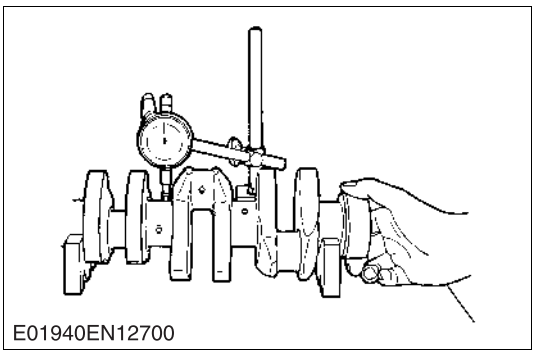
E01940EN12700

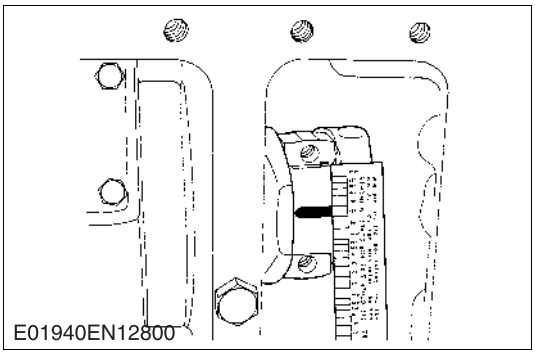
E01940EN12800

## Crankshaft Alignment

1. Support the crankshaft with V blocks on the surface plate at both end journals.
2. Set a dial indicator with its tip on the intermediate journal.
3. Measure the crankshaft alignment.
4. If the measurement exceeds the allowable limit, replace the crankshaft.

| | | |
|---|---|---|
| Crankshaft alignment | Allowable limit | 0.02 mm<br>0.0008 in. |

W11613530

## Oil Clearance between Crankpin and Crankpin Bearing

1. Clean the crankpin and crankpin bearing.
2. Put a strip of plastigage (Code No. 07909-30241) on the center of the crankpin.
3. Install the connecting rod cap and tighten the connecting rod screws to the specified torque, and remove the cap again.
4. Measure the amount of the flattening with the scale, and get the oil clearance.
5. If the oil clearance exceeds the allowable limit, replace the crankpin bearing.
6. If the same size bearing is useless because of the crankpin wear, replace it with an undersize one referring to the table and the figure.

■ **NOTE**

- **Never insert the plastigage into the crankpin oil hole.**
- **Be sure not to move the crankshaft while the connecting rod screws are tightened.**

**[D722 · D782]**

| | | |
|---|---|---|
| Oil clearance between crankpin and crankpin bearing | Factory spec. | 0.020 to 0.051mm<br>0.00079 to 0.00201 in. |
| | Allowable limit | 0.15 mm<br>0.0059 in. |
| Crankpin O.D. | Factory spec. | 33.959 to 33.975 mm<br>1.33697 to 1.33760 in. |
| Crankpin bearing I.D. | Factory spec. | 33.995 to 34.010 mm<br>1.33839 to 1.33898 in. |

**[D1105]**

| | | |
|---|---|---|
| Oil clearance between crankpin and crankpin bearing | Factory spec. | 0.029 to 0.091mm<br>0.00114 to 0.00358 in. |
| | Allowable limit | 0.20 mm<br>0.0079 in. |
| Crankpin O.D. | Factory spec. | 39.959 to 39.975 mm<br>1.57319 to 1.57382 in. |
| Crankpin bearing I.D. | Factory spec. | 40.004 to 40.050 mm<br>1.57496 to 1.57677 in. |

W11625390

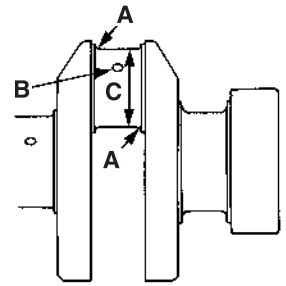

E01940EN12901

## Oil Clearance between Crankpin and Crankpin Bearing (Continued)

**(Reference)**

- Undersize crankpin bearing

**[D722 · D782]**

| Undersize | Bearing | Code Number | Marking |
|---|---|---|---|
| 0.2 mm<br>0.008 in. | Crankpin bearing 02 | 15861-22970 | 020 US |
| 0.4 mm<br>0.016 in. | Crankpin bearing 04 | 15861-22980 | 040 US |

**[D1105]**

| Undersize | Bearing | Code Number | Marking |
|---|---|---|---|
| 0.2 mm<br>0.008 in. | Crankpin bearing 02 | 16241-22970 | 020 US |
| 0.4 mm<br>0.016 in. | Crankpin bearing 04 | 16241-22980 | 040 US |

- Undersize dimensions of crankpin

**[D722 · D782]**

| Undersize / Dimension | 0.2 mm<br>0.008 in. | 0.4 mm<br>0.016 in. |
|---|---|---|
| **A** | 2.3 to 2.7 mm radius<br>0.091 to 0.106 in. radius | 2.3 to 2.7 mm radius<br>0.091 to 0.106 in. radius |
| **B** | 4 mm radius<br>0.16 in. radius | 4 mm radius<br>0.16 in. radius |
| **C** | 33.759 to 33.775 mm<br>1.32910 to 1.32973 in. | 33.559 to 33.575 mm<br>1.32122 to 1.32185 in. |
| (0.8-S)<br>The crankpin must be fine-finished to higher than ∇∇∇∇. | | |

**[D1105]**

| Undersize / Dimension | 0.2 mm<br>0.008 in. | 0.4 mm<br>0.016 in. |
|---|---|---|
| **A** | 2.8 to 3.2 mm radius<br>0.1102 to 0.1260 in. radius | 2.8 to 3.2 mm radius<br>0.1102 to 0.1260 in. radius |
| **B** | 1.0 to 1.5 mm radius<br>0.0394 to 0.0591 in. radius | 1.0 to 1.5 mm radius<br>0.0394 to 0.0591 in. radius |
| **C** | 39.759 to 39.775 mm<br>1.56531 to 1.56594 in. | 39.559 to 39.575 mm<br>1.55744 to 1.55807 in. |
| (0.8-S)<br>The crankpin must be fine-finished to higher than ∇∇∇∇. | | |

W1058018

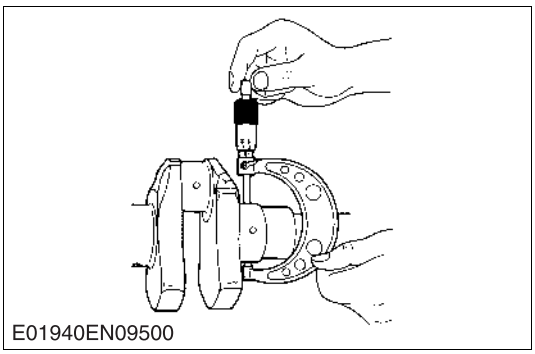
E01940EN09500

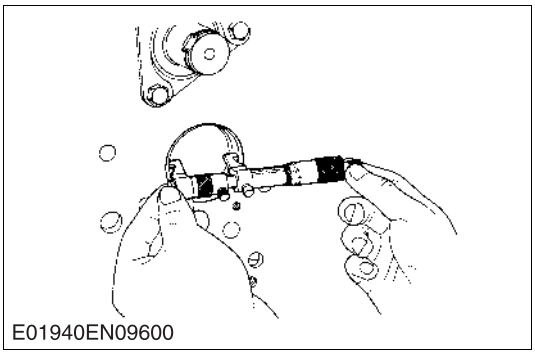
E01940EN09600

**Oil Clearance between Crankshaft Journal and Crankshaft Bearing 1**

1. Measure the O.D. of the crankshaft front journal with an outside micrometer.
2. Measure the I.D. of the crankshaft bearing 1 with an inside micrometer, and calculate the oil clearance.
3. If the oil clearance exceeds the allowable limit, replace the crankshaft bearing 1.
4. If the same size bearing is useless because of the crankshaft journal wear, replace it with an undersize one referring to the table and the figure.

**[D722 · D782]**

| | | |
|---|---|---|
| Oil Clearance between crankshaft journal and crankshaft bearing 1 | Factory spec. | 0.034 to 0.106 mm<br>0.00134 to 0.00417 in. |
| | Allowable limit | 0.20 mm<br>0.0079 in. |
| Crankshaft journal O.D. | Factory spec. | 39.934 to 39.950 mm<br>1.57221 to 1.57284 in. |
| Crankshaft bearing 1 I.D. | Factory spec. | 39.984 to 40.040 mm<br>1.57417 to 1.57638 in. |

**[D1105]**

| | | |
|---|---|---|
| Oil Clearance between crankshaft journal and crankshaft bearing 1 | Factory spec. | 0.034 to 0.114 mm<br>0.00134 to 0.00449 in. |
| | Allowable limit | 0.20 mm<br>0.0079 in. |
| Crankshaft journal O.D. | Factory spec. | 47.934 to 47.950 mm<br>1.88716 to 1.88779 in. |
| Crankshaft bearing 1 I.D. | Factory spec. | 47.984 to 48.048 mm<br>1.88913 to 1.89165 in. |

W10323470

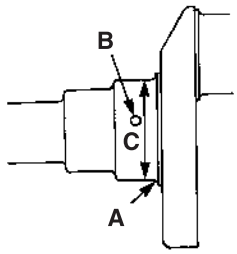

E01940EN06701

## Oil Clearance between Crankshaft Journal and Crankshaft Bearing 1 (Continued)

**(Reference)**

- Undersize crankshaft bearing 1

**[D722 · D782]**

| Undersize | Bearing | Code Number | Marking |
|---|---|---|---|
| 0.2 mm<br>0.008 in. | Crankshaft bearing 1 02 | 15861-23910 | 020 US |
| 0.4 mm<br>0.016 in. | Crankshaft bearing 1 04 | 15861-23920 | 040 US |

**[D1105]**

| Undersize | Bearing | Code Number | Marking |
|---|---|---|---|
| 0.2 mm<br>0.008 in. | Crankshaft bearing 1 02 | 16241-23910 | 020 US |
| 0.4 mm<br>0.016 in. | Crankshaft bearing 1 04 | 16241-23920 | 040 US |

- Undersize dimensions of crankshaft journal

**[D722 · D782]**

| Undersize / Dimension | 0.2 mm<br>0.008 in. | 0.4 mm<br>0.016 in. |
|---|---|---|
| **A** | 1.8 to 2.2 mm radius<br>0.071 to 0.087 in. radius | 1.8 to 2.2 mm radius<br>0.071 to 0.087 in. radius |
| **B** | 5 mm dia.<br>0.20 in. dia. | 5 mm dia.<br>0.20 in. dia. |
| **C** | 39.734 to 39.750 mm<br>1.56433 to 1.56496 in. | 39.534 to 39.550 mm<br>1.55646 to 1.55709 in. |
| The crankshaft journal must be fine-finished to higher than ∇∇∇∇. (0.8-S) | | |

**[D1105]**

| Undersize / Dimension | 0.2 mm<br>0.008 in. | 0.4 mm<br>0.016 in. |
|---|---|---|
| **A** | 2.3 to 2.7 mm radius<br>0.0906 to 0.1063 in. radius | 2.3 to 2.7 mm radius<br>0.0906 to 0.1063 in. radius |
| **B** | 1.0 to 1.5 mm radius<br>0.0394 to 0.0591 in. radius | 1.0 to 1.5 mm radius<br>0.0394 to 0.0591 in. radius |
| **C** | 47.734 to 47.750 mm<br>1.87929 to 1.87992 in. | 47.534 to 47.550 mm<br>1.87142 to 1.87204 in. |
| The crankshaft journal must be fine-finished to higher than ∇∇∇∇. (0.8-S) | | |

W1060633

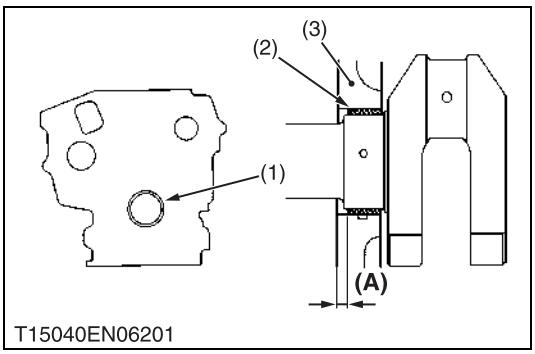


## Replacing Crankshaft Bearing 1

**(When removing)**

1. Press out the used crankshaft bearing 1 using a crankshaft bearing 1 replacing tool.

**(When installing)**

1. Clean a new crankshaft bearing 1 and crankshaft journal bore, and apply engine oil to them.
2. Using a crankshaft bearing 1 replacing tool, press in a new bearing 1 (2) so that its seam (1) directs toward the exhaust manifold side. (See figure.)

| | | |
|---|---|---|
| Dimension **(A)** | Factory spec. | 0 to 0.3 mm<br>0 to 0.012 in. |

(1) Seam
(2) Crankshaft Bearing 1
(3) Cylinder Block

W10342000

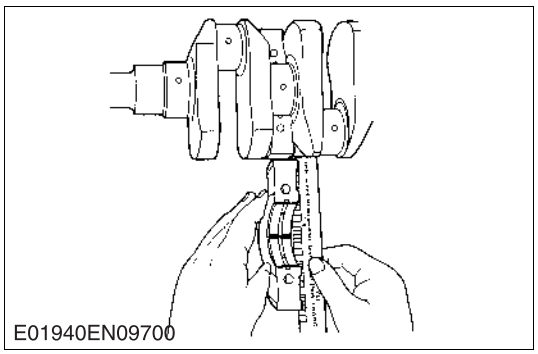


**Oil Clearance between Crankshaft Journal and Crankshaft Bearing 2 and Crankshaft Bearing 3**

1. Put a strip of plastigage (Code No. 07909-30241) on the center of the journal.
2. Install the bearing case and tighten the bearing case screws 1 to the specified torque, and remove the bearing case again.
3. Measure the amount of the flattening with the scale, and get the oil clearance.
4. If the oil clearance exceeds the allowable limit, replace the crankshaft bearing 2 or 3.
5. If the same size bearing is useless because of the crankshaft journal wear, replace it with an undersize one referring to the table and figure.

■ **NOTE**

- **Be sure not to move the crankshaft while the bearing case screws are tightened.**

**[D722 · D782]**

| | | |
|---|---|---|
| Oil clearance between crankshaft journal and crankshaft bearing 2 and crankshaft bearing 3 | Factory spec. | 0.028 to 0.059 mm<br>0.00110 to 0.00232 in. |
| | Allowable limit | 0.20 mm<br>0.0079 in. |

| | | |
|---|---|---|
| Crankshaft journal O.D. (Intermediate) | Factory spec. | 39.934 to 39.950 mm<br>1.57221 to 1.57284 in. |
| Crankshaft bearing 3 I.D. | Factory spec. | 39.978 to 39.993 mm<br>1.57394 to 1.57453 in. |

| | | |
|---|---|---|
| Crankshaft journal O.D. (Flywheel side) | Factory spec. | 43.978 to 43.993 mm<br>1.73142 to 1.73201 in. |
| Crankshaft bearing 2 I.D. | Factory spec. | 43.984 to 44.026 mm<br>1.73165 to 1.73331 in. |

**[D1105]**

| | | |
|---|---|---|
| Oil clearance between crankshaft journal and crankshaft bearing 2 | Factory spec. | 0.034 to 0.095 mm<br>0.00134 to 0.00374 in. |
| | Allowable limit | 0.20 mm<br>0.0079 in. |

| | | |
|---|---|---|
| Crankshaft journal O.D. (Intermediate) | Factory spec. | 47.934 to 47.950 mm<br>1.88716 to 1.88779 in. |
| Crankshaft bearing 2 I.D. | Factory spec. | 47.984 to 48.029 mm<br>1.88913 to 1.89091 in. |

| | | |
|---|---|---|
| Oil clearance between crankshaft journal and crankshaft bearing 3 | Factory spec. | 0.034 to 0.098 mm<br>0.00134 to 0.00386 in. |
| | Allowable limit | 0.20 mm<br>0.0079 in. |

| | | |
|---|---|---|
| Crankshaft journal O.D. (Flywheel side) | Factory spec. | 51.921 to 51.940 mm<br>2.04413 to 2.04488 in. |
| Crankshaft bearing 3 I.D. | Factory spec. | 51.974 to 52.019 mm<br>2.04622 to 2.04799 in. |

W10344030

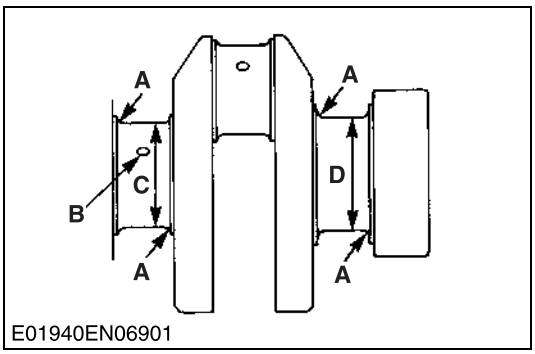


## Oil Clearance between Crankshaft Journal and Crankshaft Bearing 2 and Crankshaft Bearing 3 (Continued)

**(Reference)**

- Undersize crankshaft bearing 2 and 3

**[D722 · D782]**

| Undersize | Bearing | Code Number | Marking |
|---|---|---|---|
| 0.2 mm<br>0.008 in. | Crankshaft bearing 2 02 | 15694-23930 | 020 US |
| | Crankshaft bearing 3 02 | 15861-23860 | 020 US |
| 0.4 mm<br>0.016 in. | Crankshaft bearing 2 04 | 15694-23940 | 040 US |
| | Crankshaft bearing 3 04 | 15861-23870 | 040 US |

**[D1105]**

| Undersize | Bearing | Code Number | Marking |
|---|---|---|---|
| 0.2 mm<br>0.008 in. | Crankshaft bearing 2 02 | 16241-23930 | 020 US |
| | Crankshaft bearing 3 02 | 16241-23860 | 020 US |
| 0.4 mm<br>0.016 in. | Crankshaft bearing 2 04 | 16241-23940 | 040 US |
| | Crankshaft bearing 3 04 | 16241-23870 | 040 US |

- Undersize dimensions of crankshaft journal

**[D722 · D782]**

| Undersize / Dimension | 0.2 mm<br>0.008 in. | 0.4 mm<br>0.016 in. |
|---|---|---|
| **A** | 1.8 to 2.2 mm radius<br>0.071 to 0.087 in. radius | 1.8 to 2.2 mm radius<br>0.071 to 0.087 in. radius |
| **B** | 3 mm dia.<br>0.12 in. dia. | 3 mm dia.<br>0.12 in. dia. |
| **C** | 39.734 to 39.750 mm<br>1.56433 to 1.56496 in. | 39.534 to 39.550 mm<br>1.55646 to 1.55709 in. |
| **D** | 43.734 to 43.750 mm<br>1.72181 to 1.72244 in. | 43.534 to 43.550 mm<br>1.71394 to 1.71457 in. |
| The crankshaft journal must be fine-finished to higher than ∇∇∇∇. (0.8-S) | | |

**[D1105]**

| Undersize / Dimension | 0.2 mm<br>0.008 in. | 0.4 mm<br>0.016 in. |
|---|---|---|
| **A** | 2.3 to 2.7 mm radius<br>0.0906 to 0.1063 in. radius | 2.3 to 2.7 mm radius<br>0.0906 to 0.1063 in. radius |
| **B** | 1.0 to 1.5 mm radius<br>0.0394 to 0.0591 in. radius | 1.0 to 1.5 mm radius<br>0.0394 to 0.0591 in. radius |
| **C** | 47.734 to 47.750 mm<br>1.87929 to 1.87992 in. | 47.534 to 47.550 mm<br>1.87141 to 1.87204 in. |
| **D** | 51.721 to 51.740 mm<br>2.03626 to 2.03700 in. | 51.521 to 51.540 mm<br>2.02838 to 2.02913 in. |
| The crankshaft journal must be fine-finished to higher than ∇∇∇∇. (0.8-S) | | |

W1062251

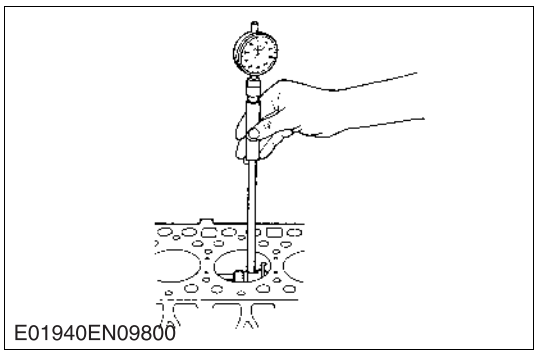
E01940EN09800

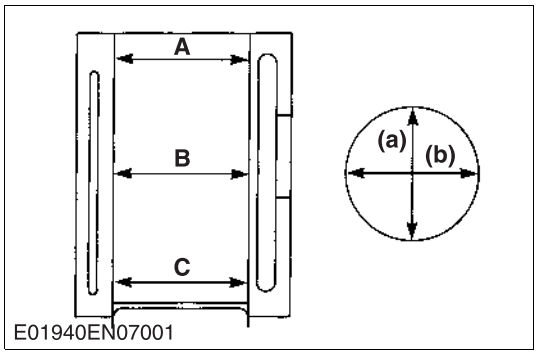

E01940EN07001

## Cylinder Wear

1. Measure the cylinder liner I.D. at the six positions (see figure) with a cylinder gauge to find the maximum and minimum I.D.'s.
2. Get the difference (Maximum wear) between the maximum and the minimum I.D.'s.
3. If the wear exceeds the allowable limit, bore and hone to the oversize dimension. (Refer to "Correcting Cylinder".)
4. Visually check the cylinder wall for scratches. If deep scratches are found, the cylinder should be bored. (Refer to "Correcting Cylinder".)

**[D722 · D782]**

| | | |
|---|---|---|
| Cylinder liner I.D. | Factory spec. | 67.000 to 67.019 mm<br>2.63779 to 2.63854 in. |
| | Allowable limit | 67.169 mm<br>2.64444 in. |

**[D1105]**

| | | |
|---|---|---|
| Cylinder liner I.D. | Factory spec. | 78.000 to 78.019 mm<br>3.0709 to 3.0716 in. |
| | Allowable limit | 78.15 mm<br>3.0768 in. |

**(A) Top**
**(B) Middle**
**(C) Bottom (Skirt)**

**(a) Right-angled to Piston Pin**
**(b) Piston Pin Direction**

W10360060

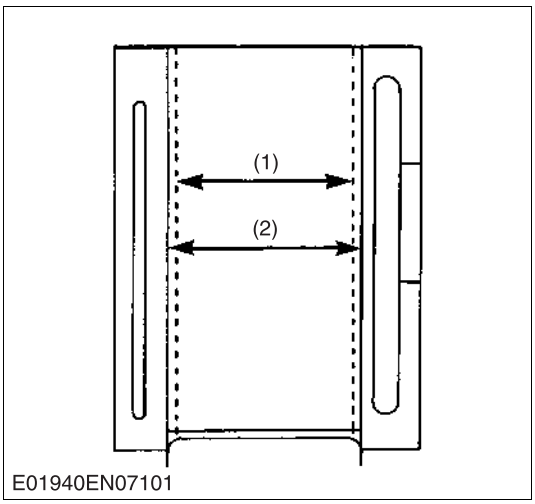


## Correcting Cylinder

1. When the cylinder is worn beyond the allowable limit, bore and hone it to the specified dimension.

**[D722 · D782]**

| | | |
|---|---|---|
| Oversized cylinder liner I.D. | Factory spec. | 67.250 to 67.269 mm<br>2.64764 to 2.64839 in. |
| | Allowable limit | 67.419 mm<br>2.65429 in. |
| Finishing | Hone to 1.2 to 2.0 μ R max.<br>∇∇∇<br>(0.0472 to 0.0787 in. R max.) | |

**[D1105]**

| | | |
|---|---|---|
| Oversized cylinder liner I.D. | Factory spec. | 78.500 to 78.519 mm<br>3.0906 to 3.0913 in. |
| | Allowable limit | 78.65 mm<br>3.0965 in. |
| Finishing | Hone to 1.2 to 2.0 μ R max.<br>∇∇∇<br>(0.0472 to 0.0787 in. R max.) | |

2. Replace the piston and piston rings with oversize ones.

**[D722 · D782]**

| Oversize | Part Name | Code Number | Marking |
|---|---|---|---|
| 0.25 mm<br>0.0098 in. | Piston | 16851-21900 | 025 OS |
| | Piston ring assembly | 16851-21090 | 025 OS |

**[D1105]**

| Oversize | Part Name | Code Number | Marking |
|---|---|---|---|
| 0.5 mm<br>0.0197 in. | Piston 05 | 16060-21910 | 05 OS |
| | Piston ring 05 assembly | 16261-21090 | 05 OS |

■ **NOTE**

- **When the oversize cylinder is worn beyond the allowable limit, replace the cylinder block with a new one.**

(1) Cylinder I.D. (Before Correction) (2) Oversized Cylinder I.D.

W10367470

# [3] LUBRICATING SYSTEM

## (1) Checking

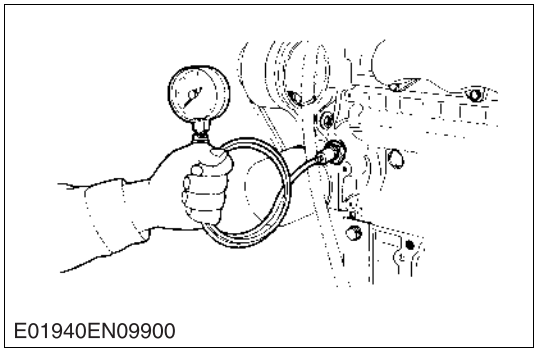
E01940EN09900

**Engine Oil Pressure**

1. Remove the engine oil pressure switch, and set a oil pressure tester (Code No. 07916-32032). (Adapter screw size : PT 1/8)
2. Start the engine. After warming up, measure the oil pressure of both idling and rated speeds.
3. If the oil pressure is less than the allowable limit, check the following.

- Engine oil insufficient
- Oil pump defective
- Oil strainer clogged
- Oil filter cartridge clogged
- Oil gallery clogged
- Excessive oil clearance
- Foreign matter in the relief valve

| | | | |
|---|---|---|---|
| Engine oil pressure | Factory spec. | At idle speed | More than 49 kPa<br>0.5 kgf/cm$^2$<br>7 psi |
| | | At rated speed | 196 to 441 kPa<br>2.0 to 4.5 kgf/cm$^2$<br>28 to 64 psi |
| | Allowable limit | At rated speed | 147 kPa<br>1.5 kgf/cm$^2$<br>27 psi |

**(When reassembling)**

- After checking the engine oil pressure, tighten the engine oil pressure switch to the specified torque.

| | | |
|---|---|---|
| Tightening torque | Oil pressure switch | 14.7 to 19.6 N·m<br>1.5 to 2.0 kgf·m<br>10.8 to 14.5 ft-lbs |

W10373890

## (2) Servicing

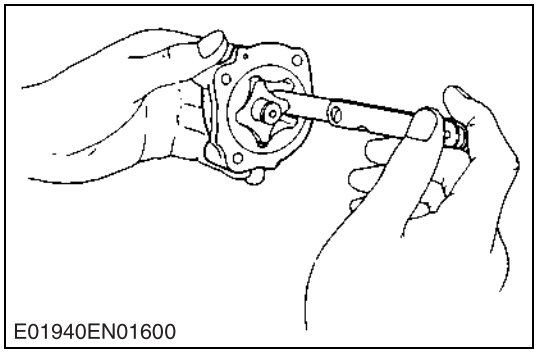
E01940EN01600

**Clearance between Inner Rotor and Outer Rotor**

1. Measure the clearance between lobes of the inner rotor and the outer rotor with a feeler gauge.
2. If the clearance exceeds the factory specifications, replace the oil pump rotor assembly.

| | | | |
|---|---|---|---|
| Rotor lobe clearance | Factory spec. | D722<br>D782 | 0.03 to 0.14 mm<br>0.0012 to 0.0055 in. |
| | | D1105 | 0.06 to 0.18 mm<br>0.0024 to 0.0071 in. |

W10378950

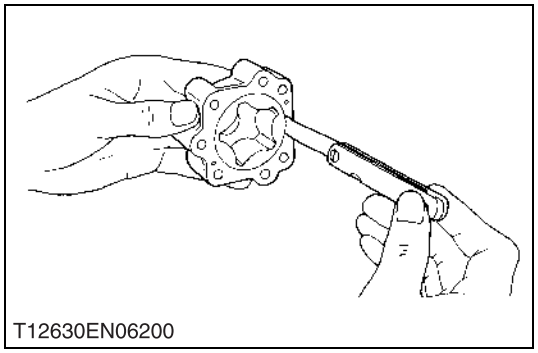
T12630EN06200

**Clearance between Outer Rotor and Pump Body**

1. Measure the clearance between the outer rotor and the pump body with a feeler gauge.
2. If the clearance exceeds the factory specifications, replace the oil pump rotor assembly.

| | | | |
|---|---|---|---|
| Clearance between outer rotor and pump body | Factory spec. | D722<br>D782 | 0.07 to 0.15 mm<br>0.0028 to 0.0059 in. |
| | | D1105 | 0.100 to 0.180 mm<br>0.0039 to 0.0071 in. |

W10381420

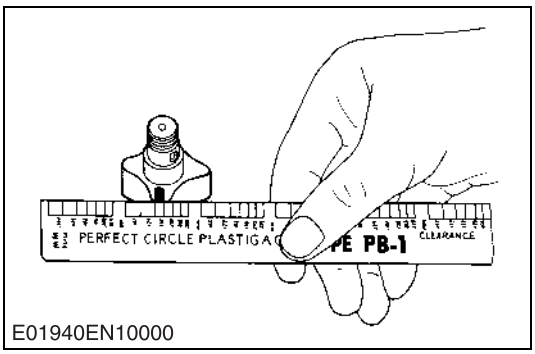

E01940EN10000

**Clearance between Rotor and Cover**

1. Put a strip of plastigage (Code No. 07909-30241) onto the rotor face with grease.
2. Install the cover and tighten the screws.
3. Remove the cover carefully, and measure the amount of the flattening with the scale and get the clearance.
4. If the clearance exceeds the factory specifications, replace oil pump rotor assembly.

| | | | |
|---|---|---|---|
| Clearance between rotor and cover | Factory spec. | D722<br>D782 | 0.075 to 0.135 mm<br>0.00295 to 0.00531 in. |
| | | D1105 | 0.030 to 0.085 mm<br>0.0012 to 0.0033 in. |

W10382660

# [4] COOLING SYSTEM

## (1) Checking and Adjusting

### (A) Fan Belt

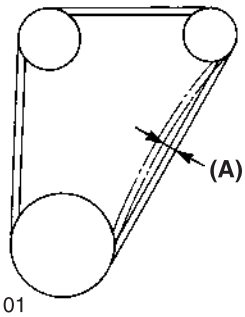


E01940EN10101

**Fan Belt Tension**

1. Measure the deflection **(A)**, depressing the belt halfway between the fan drive pulley and alternator pulley at specified force (98 N, 10 kgf, 22 lbs).
2. If the measurement is not within the factory specifications, loosen the alternator mounting screws and relocate the alternator to adjust.

| | | |
|---|---|---|
| Deflection **(A)** | Factory spec. | Approx. 10 mm<br>0.4 in. |

**(A) Deflection**

W10384280

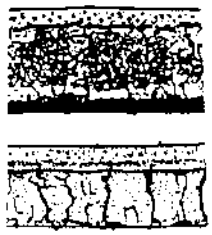

E01940EN07700

**Fan Belt Damage and Wear**

1. Check the fan belt for damage.
2. If the fan belt is damaged, replace it.
3. Check if the fan belt is worn and sunk in the pulley groove.
4. If the fan belt is nearly worn out and deeply sunk in the pulley groove, replace it.

**(A) Good** **(B) Bad**

W10385490

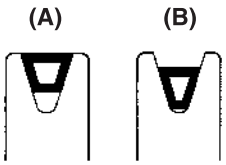


E01940EN07801

## (B) Radiator

**CAUTION**

- **When removing the radiator cap, wait at least ten minutes after the engine has stopped and cooled down. Otherwise, hot water may gush out, scalding nearby people.**

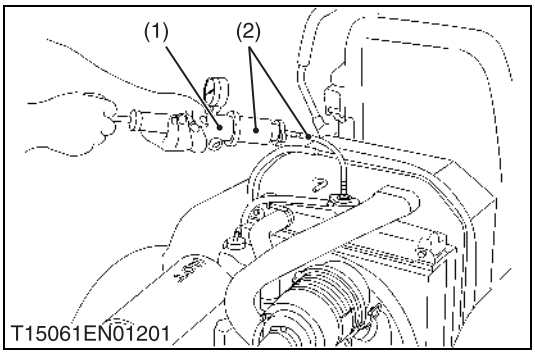


**Radiator Water Leakage**

1. Pour a specified amount of water into the radiator.
2. Set a radiator tester (1) (Code No. 07909-31551) and an adapter (2) (BANZAI Code No. RCT-2A-30S) and raise the water pressure to the specified pressure.
3. Check the radiator for water leaks.
4. For water leak from the pinhole, repair with the radiator cement. When water leak is excessive, replace the radiator.

| | | |
|---|---|---|
| Radiator water leakage test pressure | Factory spec. | 137 kPa<br>1.4 kgf/cm$^2$<br>20 psi |

(1) Radiator Tester (2) Adaptor

W10387530

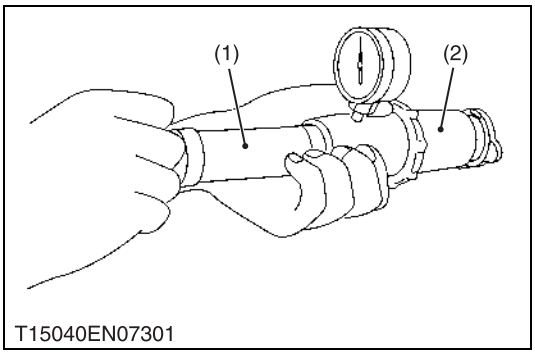


**Radiator Cap Air Leakage**

1. Set a radiator tester (1) and adaptor (2) (BANZAI Code No. RCT-2A-30S) on the radiator cap.
2. Apply the specified pressure (88 kPa, 0.9 kgf/cm$^2$, 13 psi), and measure the time for the pressure to fall to 59 kPa (0.6 kgf/cm$^2$, 9 psi).
3. If the measurement is less than the factory specification, replace the radiator cap.

| | | |
|---|---|---|
| Pressure falling time | Factory spec. | More than 10 seconds for pressure fall from 88 to 59 kPa (from 0.9 to 0.6 kgf/cm$^2$, from 13 to 9 psi) |

(1) Radiator Tester (2) Adaptor

W1054156

## (C) Thermostat

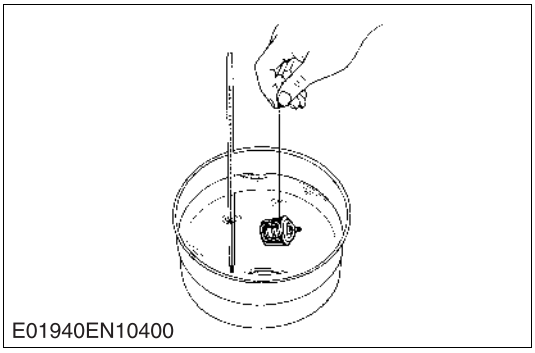


**Thermostat Valve Opening Temperature**

1. Suspend the thermostat in the water by a string with its end inserted between the valve and seat.
2. Heating the water gradually, read the temperature when the valve opens and leaves the string.
3. Continue heating and read the temperature when the valve opens approx. 6 mm (0.236 in.).
4. If the measurement is not within the factory specifications, replace the thermostat.

| | | |
|---|---|---|
| Thermostat's valve opening temperature | Factory spec. | 80.5 to 83.5 °C<br>176.9 to 182.3 °F |
| Temperature at which thermostat completely opens | Factory spec. | 95 °C<br>203 °F |

W10390350

## (2) Disassembling and Assembling

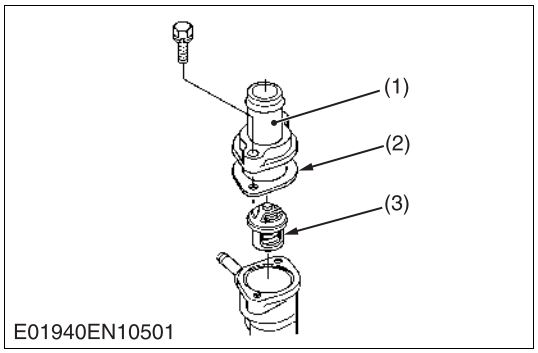


**Thermostat Assembly**

1. Remove the thermostat cover mounting screws, and remove the thermostat cover (1).
2. Remove the thermostat assembly (3).

**(When reassembling)**

- Apply a liquid gasket (Three Bond 1215 or equivalent) only at the thermostat cover side of the gasket (2).

(1) Thermostat Cover
(2) Thermostat Cover Gasket
(3) Thermostat Assembly

W10393690

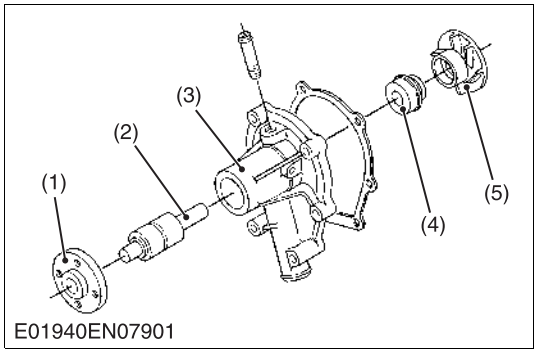


**Water Pump Assembly**

1. Loosen the alternator mounting bolts, and remove the fan belt.
2. Remove the fan and fan pulley.
3. Remove the water pump assembly from the gear case cover.
4. Remove the water pump flange (1).
5. Press out the water pump shaft (2) with the impeller (5) on it.
6. Remove the impeller from the water pump shaft (2).
7. Remove the mechanical seal (4).

**(When reassembling)**

- Apply a liquid gasket (Three Bond 1215 or equivalent) to the both sides of gasket.
- Replace the mechanical seal with new one.

(1) Water Pump Flange
(2) Water Pump Shaft
(3) Water Pump Body
(4) Mechanical Seal
(5) Impeller

W10395040

# [5] FUEL SYSTEM

## (1) Checking and Adjusting

## (A) Injection Pump

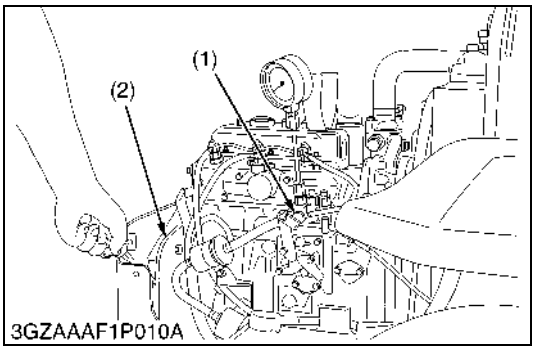


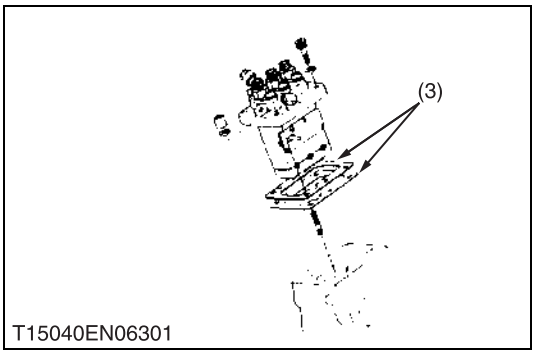


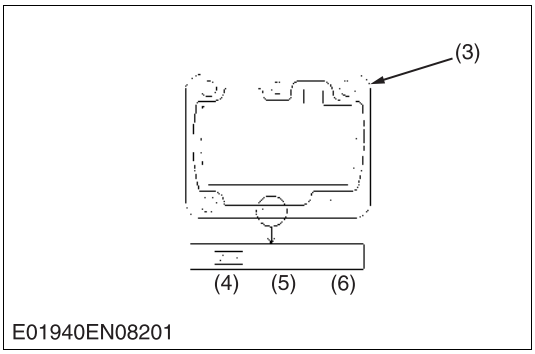


**Injection Timing**

1. Remove the bonnet and air cleaner.
2. Remove the muffler.
3. Remove the injection pipes and glow plugs.
4. Engage the parking brake.
5. Set the throttle lever to the maximum engine speed.
6. Turn on the key switch.
7. Turn the flywheel counterclockwise (facing the flywheel) until fuel flows from the delivery valve holder (1).
8. Continue to turn the flywheel slowly, and stop it as soon as the fuel level at the tip of the delivery valve holder begins to increase.
9. Check to see if the timing angle lines on the flywheel is aligned with the alignment mark (2).
10. If the injection timing is out of adjustment, readjust the timing with shims (3).

| | | |
|---|---|---|
| Injection timing | Factory spec. | 0.33 to 0.37 rad.<br>(19 to 21 °) before T.D.C. |

■ **NOTE**

- **The sealant is applied to both sides of the shim (soft metal gasket shim). The liquid gasket is not required for assembling.**
- **Shims are available in thickness of 0.20 mm (0.0079 in.), 0.25 mm (0.0098 in.) and 0.30 mm (0.0118 in.). Combine these shims for adjustments.**
- **Addition or reduction of shim (0.05 mm, 0.0020 in.) delays or advances the injection timing by approx. 0.0087 rad. (0.5 °).**
- **In disassembling and replacing the injection pump, be sure to use the same number of new shims with the same thickness.**
- **Refer to figure left to check the thickness of the shims.**

(1) Delivery Valve Holder
(2) Alignment Mark
(3) Shim
(4) Shim with Two-holes : 0.20 mm (0.0079 in.)
(5) Shim with One-hole : 0.25 mm (0.0098 in.)
(6) Shim with No hole : 0.30 mm (0.0118 in.)

W10397720

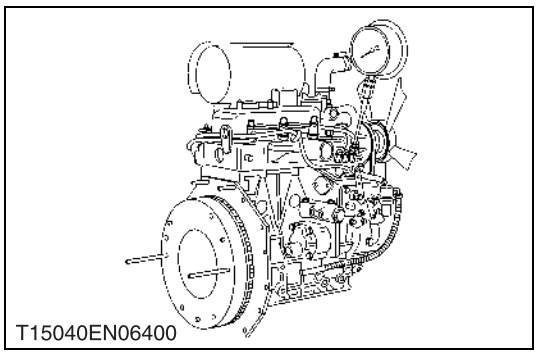
T15040EN06400

**Fuel Tightness of Pump Element**

1. Remove the bonnet and air cleaner.
2. Remove the muffler.
3. Disconnect the accelerator wire.
4. Remove the air cleaner stay.
5. Remove the injection pipes and glow plugs.
6. Install the air cleaner stay.
7. Connect the accelerator wire.
8. Install the injection pump pressure tester to the fuel injection pump.
9. Set the speed control lever to the maximum speed position.
10. Turn the flywheel ten times or more to increase the pressure.
11. If the pressure can not reach the allowable limit, replace the pump element or injection pump assembly.

| | | |
|---|---|---|
| Fuel tightness of pump element | Allowable limit | 14.7 MPa<br>150 kgf/cm$^2$<br>2130 psi |

■ **NOTE**

- **Apply a liquid gasket (Three Bond 1215 or equivalent) to both sides of the solenoid cover gasket.**

W10401760

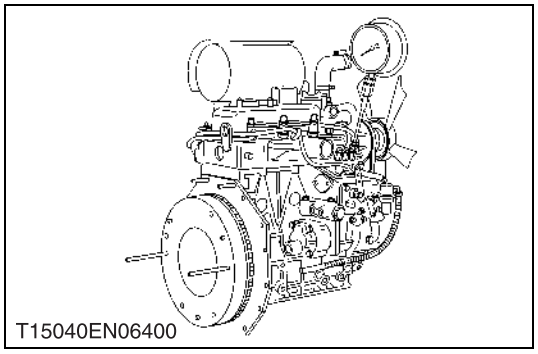
T15040EN06400

**Fuel Tightness of Delivery Valve**

1. Remove the bonnet and air cleaner.
2. Remove the muffler.
3. Remove the injection pipes and glow plugs.
4. Install the injection pump pressure tester to the fuel injection pump.
5. Set the throttle lever to the maximum engine speed.
6. Turn the flywheel and raise the pressure to approx. 14.7 MPa (150 kgf/cm$^2$, 2130 psi).
7. Now turn the flywheel back about half a turn (to keep the plunger free). Maintain the flywheel at this position and clock the time taken for the pressure to drop from 14.7 to 13.7 MPa (from 150 to 140 kgf/cm$^2$, 2130 to 1990 psi).
8. Measure the time needed to decrease the pressure from 14.7 to 13.7 MPa (from 150 to 140 kgf/cm$^2$, from 2130 to 1990 psi).
9. If the measurement is less than allowable limit, replace the delivery valve.

| | | |
|---|---|---|
| Fuel tightness of delivery valve | Allowable limit | 5 seconds<br>14.7 → 13.7 MPa<br>150 → 140 kgf/cm$^2$<br>2130 → 1990 psi |

W10403300

## (B) Injection Nozzle

**CAUTION**

- **Check the injection pressure and condition after confirming that there is nobody standing in the direction the fume goes.**
  **If the fume from the nozzle directly contacts the human body, cells may be destroyed and blood poisoning may be caused.**

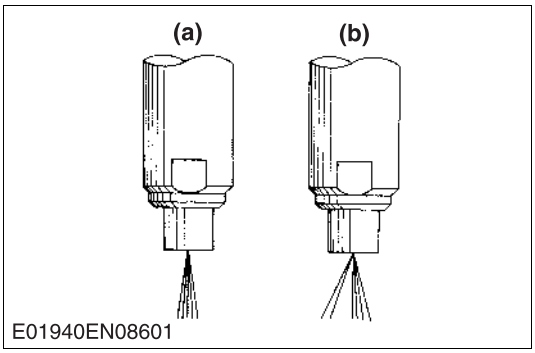

E01940EN08601

**Nozzle Spraying Condition**

1. Set the injection nozzle to a nozzle tester (Code No. 07909-31361), and check the nozzle spraying condition.
2. If the spraying condition is defective, replace the nozzle piece.

**(a) Good** **(b) Bad**

W10411400

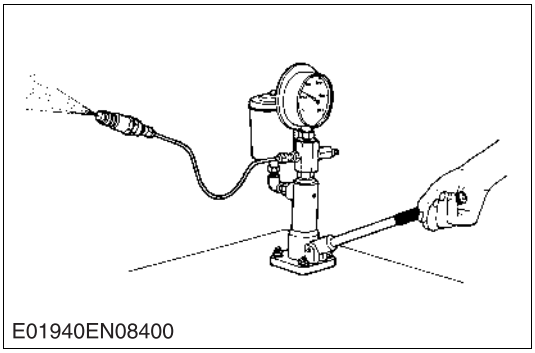
E01940EN08400

**Fuel Injection Pressure**

1. Set the injection nozzle to a nozzle tester (Code No. 07909-31361).
2. Slowly move the tester handle to measure the pressure at which fuel begins to jet out from the nozzle.
3. If the measurement is not within the factory specifications, replace the adjusting washer (1) in the nozzle holder to adjust it.

| | | |
|---|---|---|
| Fuel injection pressure | Factory spec. | 13.7 to 14.7 MPa<br>140 to 150 kgf/cm$^2$<br>1990 to 2130 psi |

**(Reference)**

- Pressure variation with 0.025 mm (0.001 in.) difference of adjusting washer thickness.
  Approx. 59 kPa (0.6 kgf/cm$^2$, 8.5 psi)

(1) Adjusting Washer

W10408820

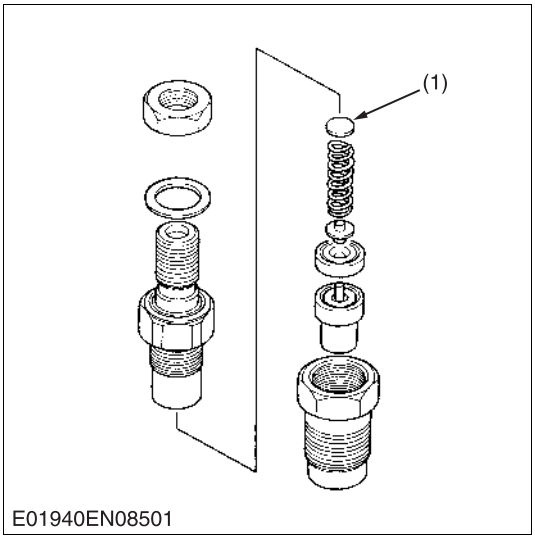

E01940EN08501

**Valve Seat Tightness**

1. Set the injection nozzle to a nozzle tester (Code No. 07909-31361).
2. Raise the fuel pressure, and keep at 12.7 MPa (130 kgf/cm$^2$, 1850 psi) for 10 seconds.
3. If any fuel leak is found, replace the nozzle piece.

| | | |
|---|---|---|
| Valve seat tightness | Factory spec. | No fuel leak at<br>12.7 MPa<br>130 kgf/cm$^2$<br>1850 psi |

W10412730

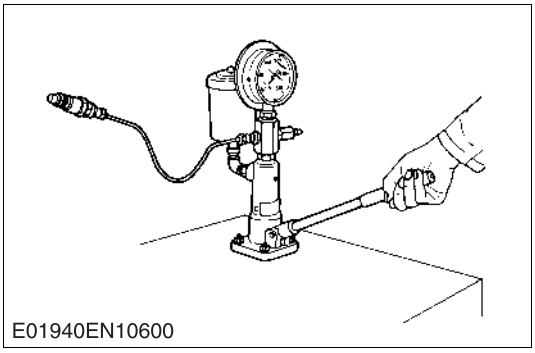
E01940EN10600

## (2) Disassembling and Assembling

## (A) Injection Nozzle

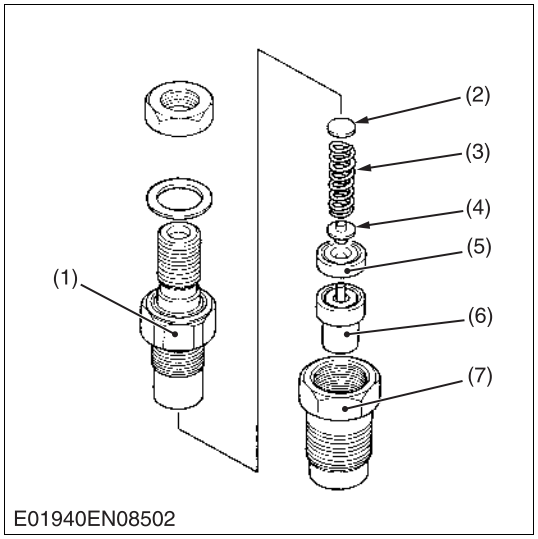


**Nozzle Holder**

1. Secure the nozzle retaining nut (7) with a vise.
2. Remove the nozzle holder (1), and take out parts inside.

**(When reassembling)**

- Assemble the nozzle in clean fuel oil.
- Install the push rod (4), noting its direction.
- After assembling the nozzle, be sure to adjust the fuel injection pressure.

| | | |
|---|---|---|
| Tightening torque | Nozzle holder | 34.3 to 39.2 N·m<br>3.5 to 4.0 kgf·m<br>25.3 to 28.9 ft-lbs |
| | Overflow pipe nut | 19.6 to 24.5 N·m<br>2.0 to 2.5 kgf·m<br>14.5 to 18.1 ft-lbs |
| | Nozzle holder assembly | 49.0 to 68.6 N·m<br>5.0 to 7.0 kgf·m<br>36.2 to 50.6 ft-lbs |

(1) Nozzle Holder
(2) Adjusting Washer
(3) Nozzle Spring
(4) Push Rod
(5) Distance Piece
(6) Nozzle Piece
(7) Nozzle Retaining Nut

W10415210

# 2 TRANSAXLE

# MECHANISM

## CONTENTS

# 1. STRUCTURE

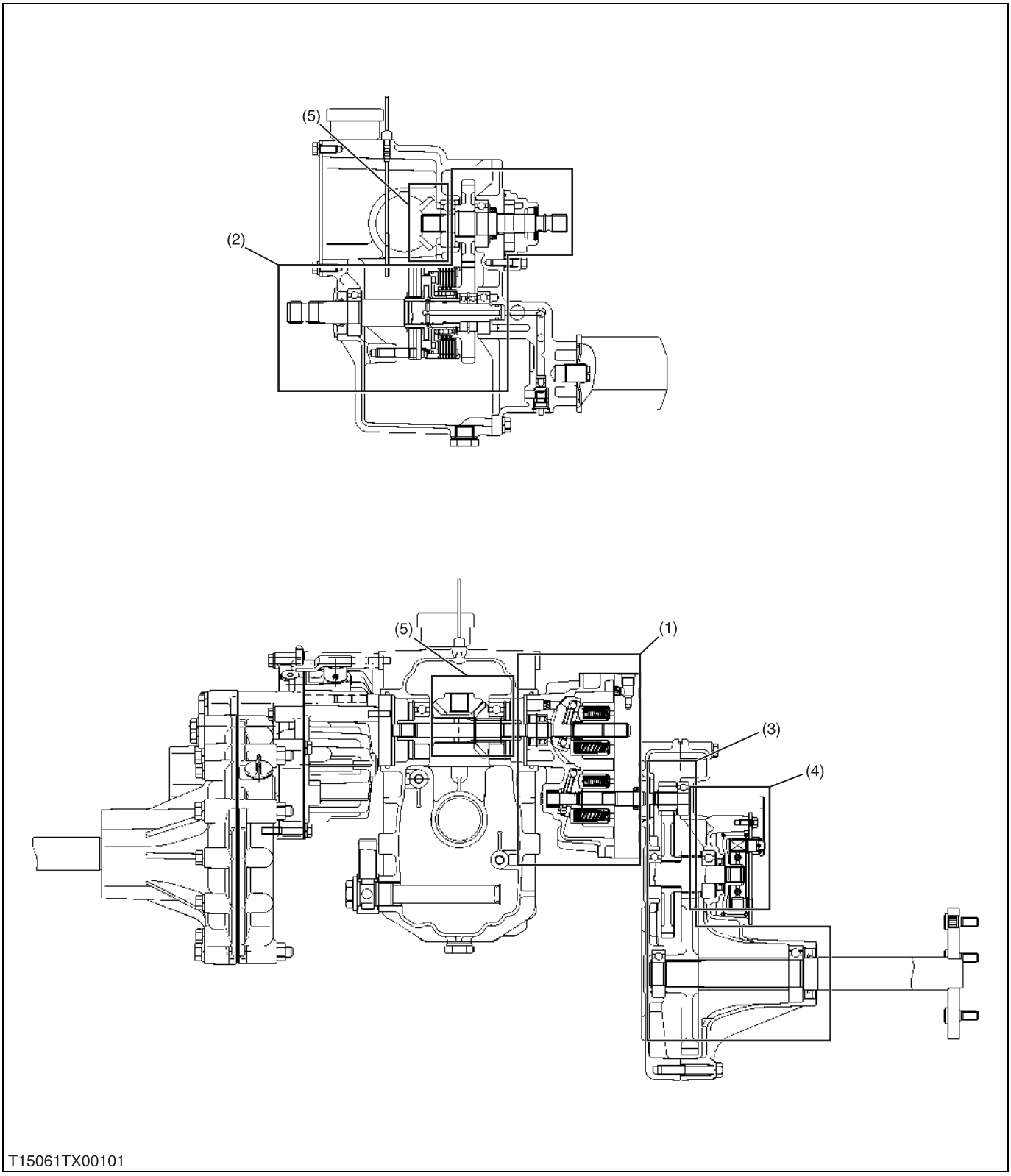


(1) Hydrostatic Transmission
(2) PTO Section
(3) Final Reduction Gear Section
(4) Parking Brake Section
(5) Bevel Gear Section

# 2. TRAVELLING SYSTEM

## [1] HYDROSTATIC TRANSMISSION

### (1) Structure

**[Serial No. Affected: below 20000]**

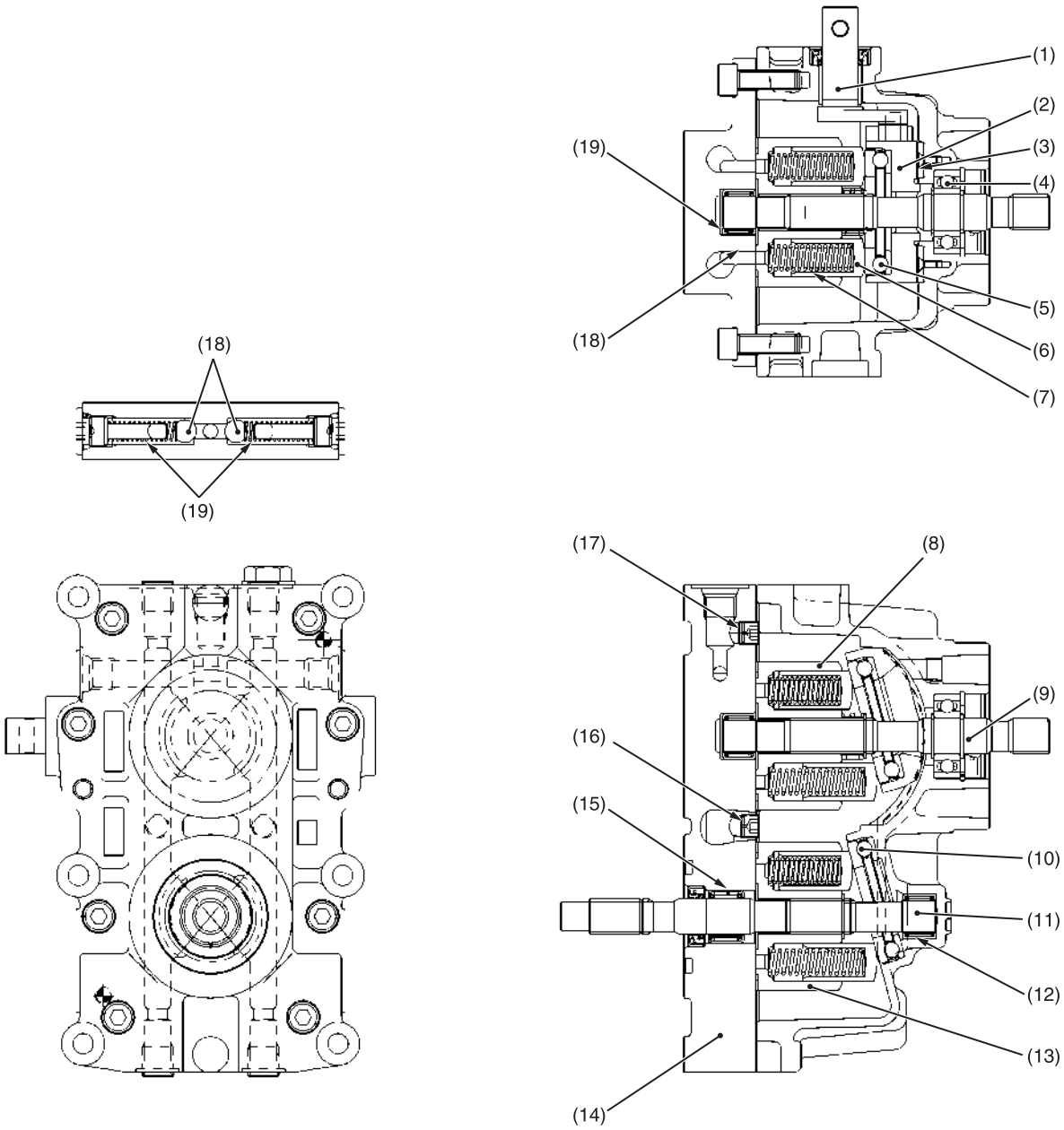


| | | | |
|---|---|---|---|
| (1) Trunnion Arm | (6) Piston | (11) Motor Shaft | (16) Neutral Orifice |
| (2) Swashplate | (7) Piston Spring | (12) Needle Bearing | (17) Lubricating Orifice |
| (3) Cradle Bearing | (8) Cylinder Block (Pump) | (13) Cylinder Block (Motor) | (18) Check Valve (Ball) |
| (4) Ball Bearing | (9) Pump Shaft | (14) Center Section | (19) Check Valve Spring |
| (5)Thrust Ball Bearing | (10) Thrust Ball Bearing | (15) Needle Bearing | |

The hydrostatic transmission consists of variable displacement piston pump, fixed displacement piston motor and valve system.

**[Serial No. Affected: above 20001]**

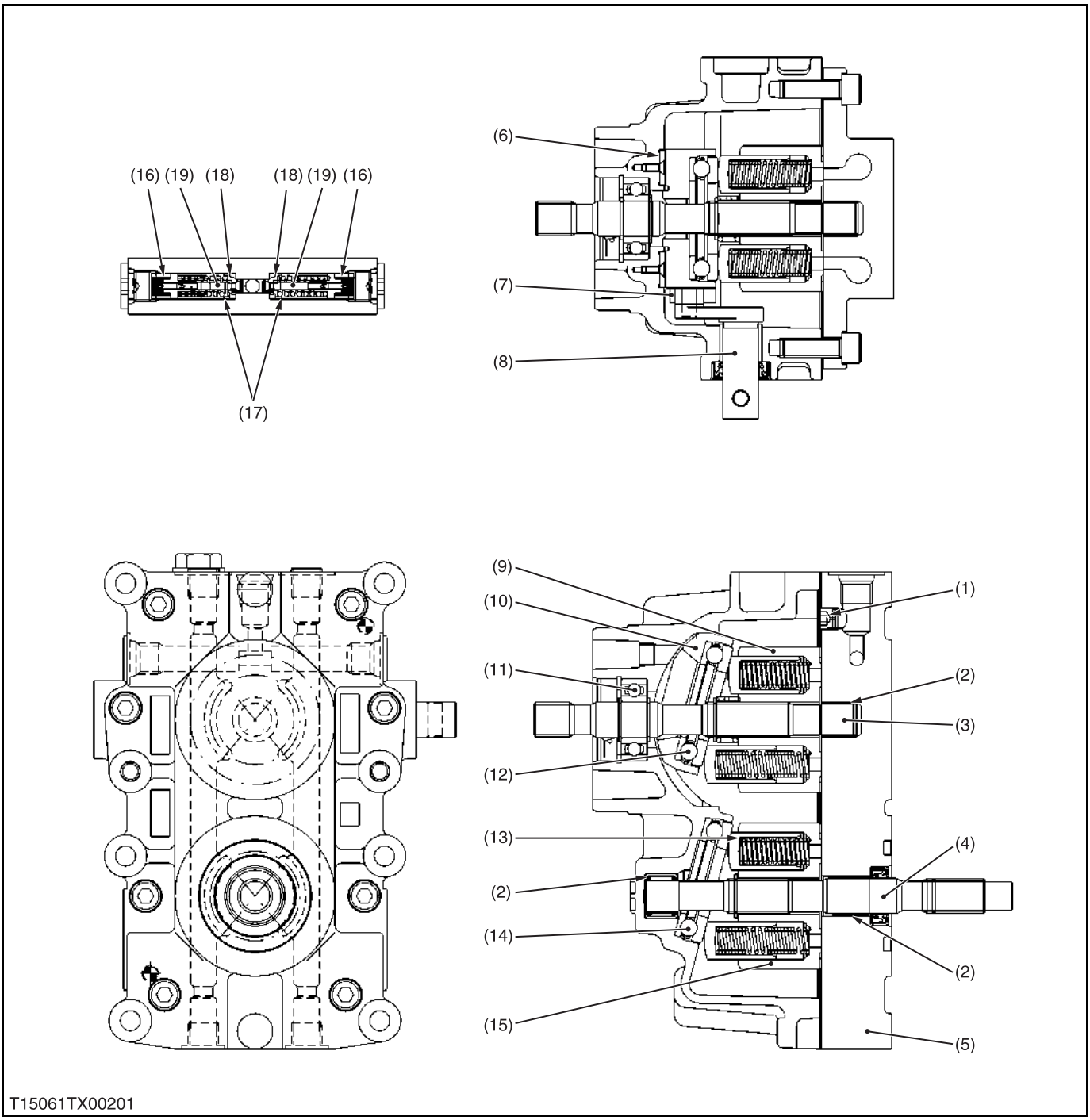


| | | | |
|---|---|---|---|
| (1) Lubricating Orifice | (6) Cradle Bearing | (11) Ball Bearing | (16) Check Valve Spring |
| (2) Bearing | (7) Slot Guide | (12) Thrust Ball Bearing | (17) Relief Valve Spring |
| (3) Pump Shaft | (8) Trunnion Arm | (13) Piston Spring | (18) Check Valve |
| (4) Motor Shaft | (9) Cylinder Block (Pump) | (14) Thrust Ball Bearing | (19) High Pressure Relief Valve |
| (5) Center Section | (10) Swashplate | (15) Cylinder Block (Motor) | |

The hydrostatic transmission consists of variable displacement piston pump, fixed displacement piston motor and valve system.

## (2) Pump and Motor

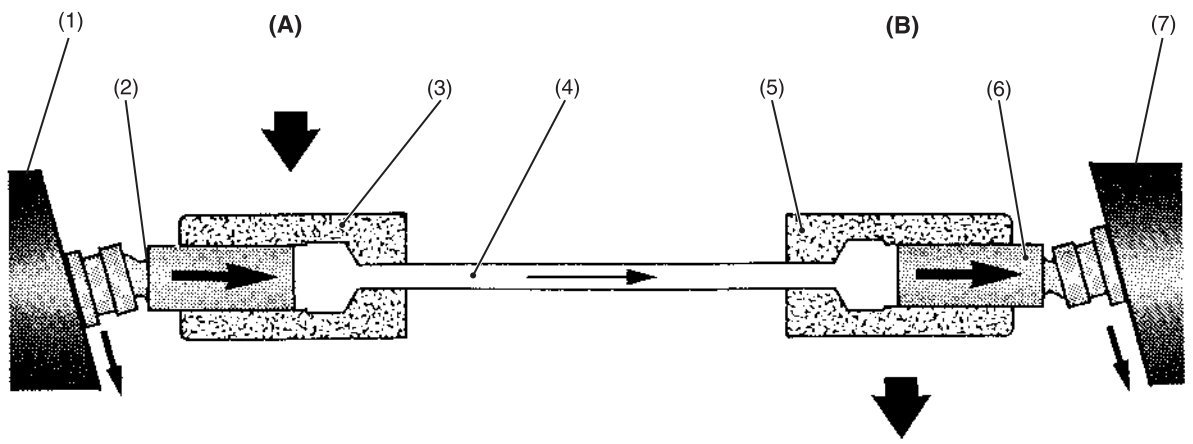


T12630TR00601

(1) Swashplate
(2) Piston
(3) Cylinder
(4) Oil
(5) Cylinder
(6) Piston
(7) Swashplate
**(A) Pump**
**(B) Motor**

Pump and motor cylinder, each containing pistons, are connected by lines. Cylinders and lines are filled with oil. Pistons ride against swashplates located in pump and motor.

In the pump, as the cylinder rotates, pistons move across the sloping face of swashplate and slide in or out of their cylinder bores. The oil, forced out by the pump pistons, causes the motor pistons to slide out of their cylinder bores.

In the motor, sliding out of the cylinder and moving across the sloping face of swashplate, the pistons rotate the cylinder.

## (3) Check Valve

**[Serial No. Affected: below 20000]**

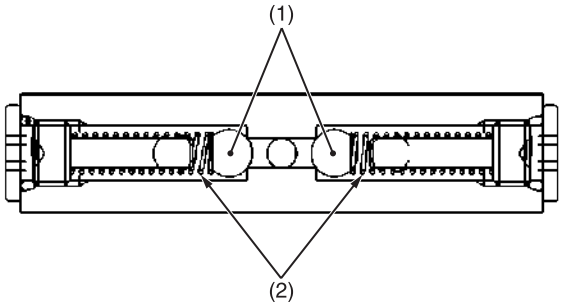


T15060TX00401

The check valves monitor the oil pressure in each line of the main oil circuit.

In neutral, both check valves are open and charging oil enters into the main oil circuit through the valves.

At normal operation, the check valve in the high pressure side is closed and it pushes and opens the another one.

(1) Check Valve (Ball)
(2) Check Spring

W1012950

## (4) Check and High Pressure Relief Valve

**[Serial No. Affected: above 20001]**

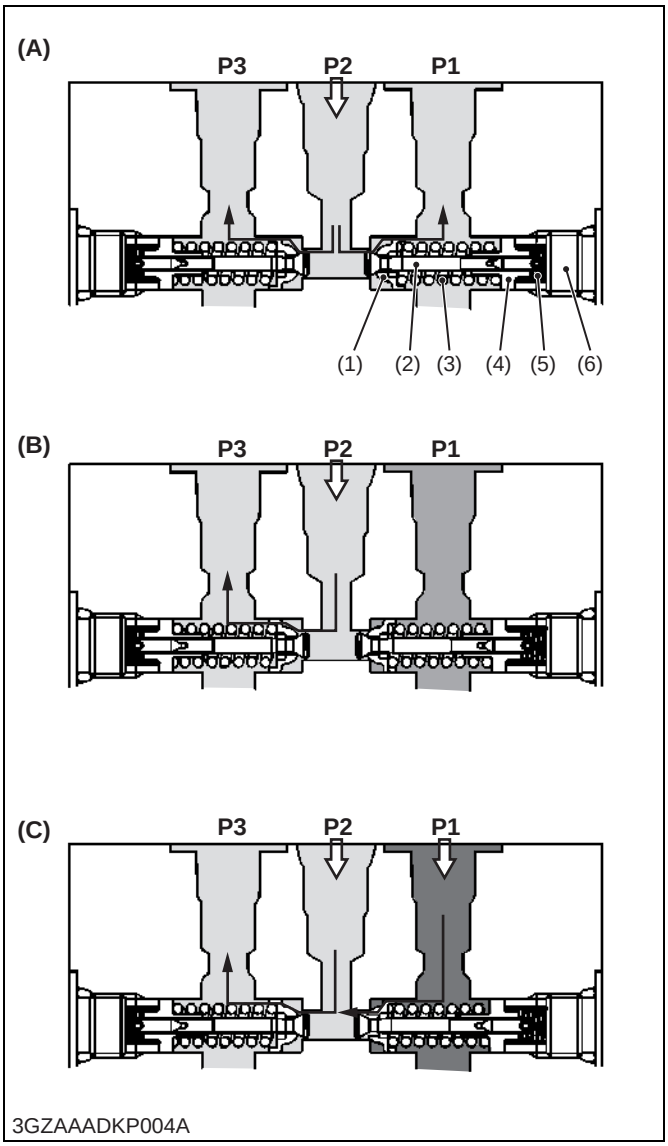


The check and high-pressure relief valve consists of pressure poppet (2), check valve seat (1), relief valve spring (3), spring guide (4) and check valve spring (5).

The valve is used to prevent an overload that would happen at a quick start, sudden stop or even during usual running. This valve doubles as a check valve.

The check and high-pressure relief valves are laid out facing each other as shown in the figure.

In neutral, both valves are open and charging oil enters into the main oil circuit through the valves. **(A)**

At normal operation, the check valve in the high-pressure side is closed and it pushes and opens the another one. An excessive charge flow goes through the charge relief valve into HST housing. **(B)**

The check and high-pressure relief valve along the high-pressure line serves as a high-pressure relief valve. If the pressure exceeds a high-pressure limit level, the pressure poppet opens itself against the relief valve spring (3) force and opens the valve seat that is located between the check valve seat (1) and the pressure poppet (2). Now the flow goes from **P1** to **P2** and **P3**. **(C)**

If the **P1** pressure drops, the relief valve spring forces the valve seat closed against the pressure. The high-pressure oil at **P1** does not flow to **P2** any longer.

As discussed above, the check and high-pressure relief valve protects engines, pumps, motors, gears and even the machine itself from overload.

| Oil temperature | Valve operating pressure |
|---|---|
| 50 °C (122 °F) | 26.3 to 29.6 MPa<br>290 to 300 kgf/cm$^2$<br>4125 to 4267 psi |

(1) Check Valve Seat
(2) Pressure Poppet
(3) Relief Valve Spring
(4) Spring Guide
(5) Check Valve Spring
(6) Valve Plug

**(A) In Neutral (Stop)**
**(B) When Check Valve Activating (Normal Operation)**
**(C) When High Pressure Relief Valve Activating**

W1015194

## (5) Oil Flow

## (A) ZD18(F) · ZD21(F)

**[Serial No. Affected: below 20000]**

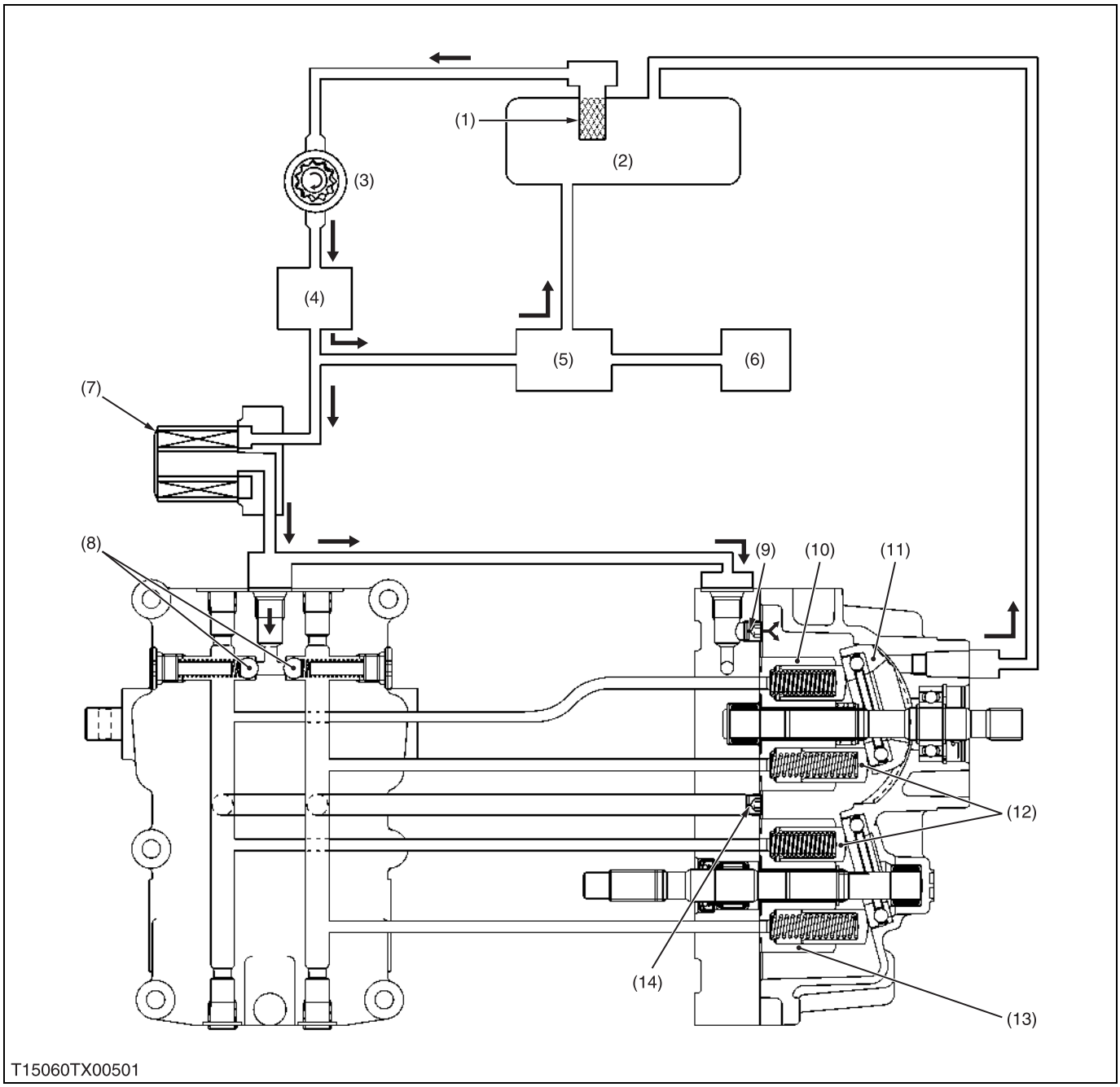


(1) Oil Strainer
(2) Transmission Case
(3) Hydraulic Pump
(4) Control Valve
(5) Regulator Valve
(6) PTO Clutch
(7) Oil Filter Cartridge
(8) Check Valve
(9) Lubricating Orifice
(10) Cylinder Block (Pump)
(11) Swashplate
(12) Piston
(13) Cylinder Block (Motor)
(14) Neutral Orifice

The pump and motor are joined in a closed hydraulic loop and most of oil circulates within the main oil circuit. A little oil lubricates and oozes out from the clearance between the moving parts of the case. Then oil in the main oil circuit of the HST needs to be supplied a want.

The charge oil is sent to the HST housing after the control valve and oil filter pass with the hydraulic pump.

The charge oil aids smooth operation of pistons for pump and motor. And overflow oil from HST housing return to the transmission case.

## (B) ZD18(F) · ZD21(F)

**[Serial No. Affected: above 20001]**

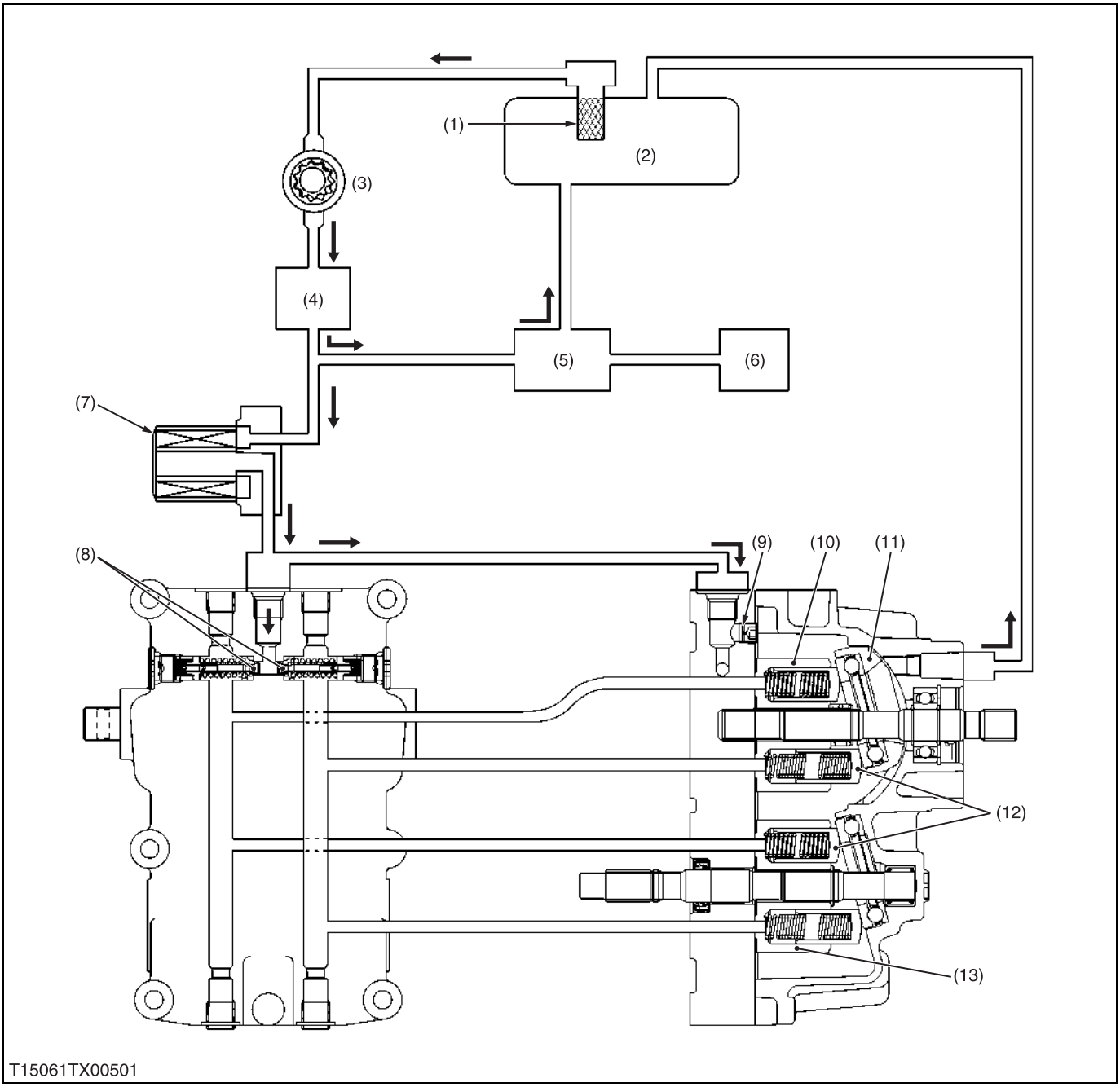


(1) Oil Strainer
(2) Transmission Case
(3) Hydraulic Pump
(4) Control Valve
(5) Regulator Valve
(6) PTO Clutch
(7) Oil Filter Cartridge
(8) Check and High Pressure Relief Valve
(9) Lubricating Orifice
(10) Cylinder Block (Pump)
(11) Swashplate
(12) Piston
(13) Cylinder Block (Motor)

The pump and motor are joined in a closed hydraulic loop and most of oil circulates within the main oil circuit. A little oil lubricates and oozes out from the clearance between the moving parts of the case. Then oil in the main oil circuit of the HST needs to be supplied a want.

The charge oil is sent to the HST housing after the control valve and oil filter pass with the hydraulic pump.

The charge oil aids smooth operation of pistons for pump and motor. And overflow oil from HST housing return to the transmission case.

## (C) ZD28(F)

**[Serial No. Affected: above 20001]**

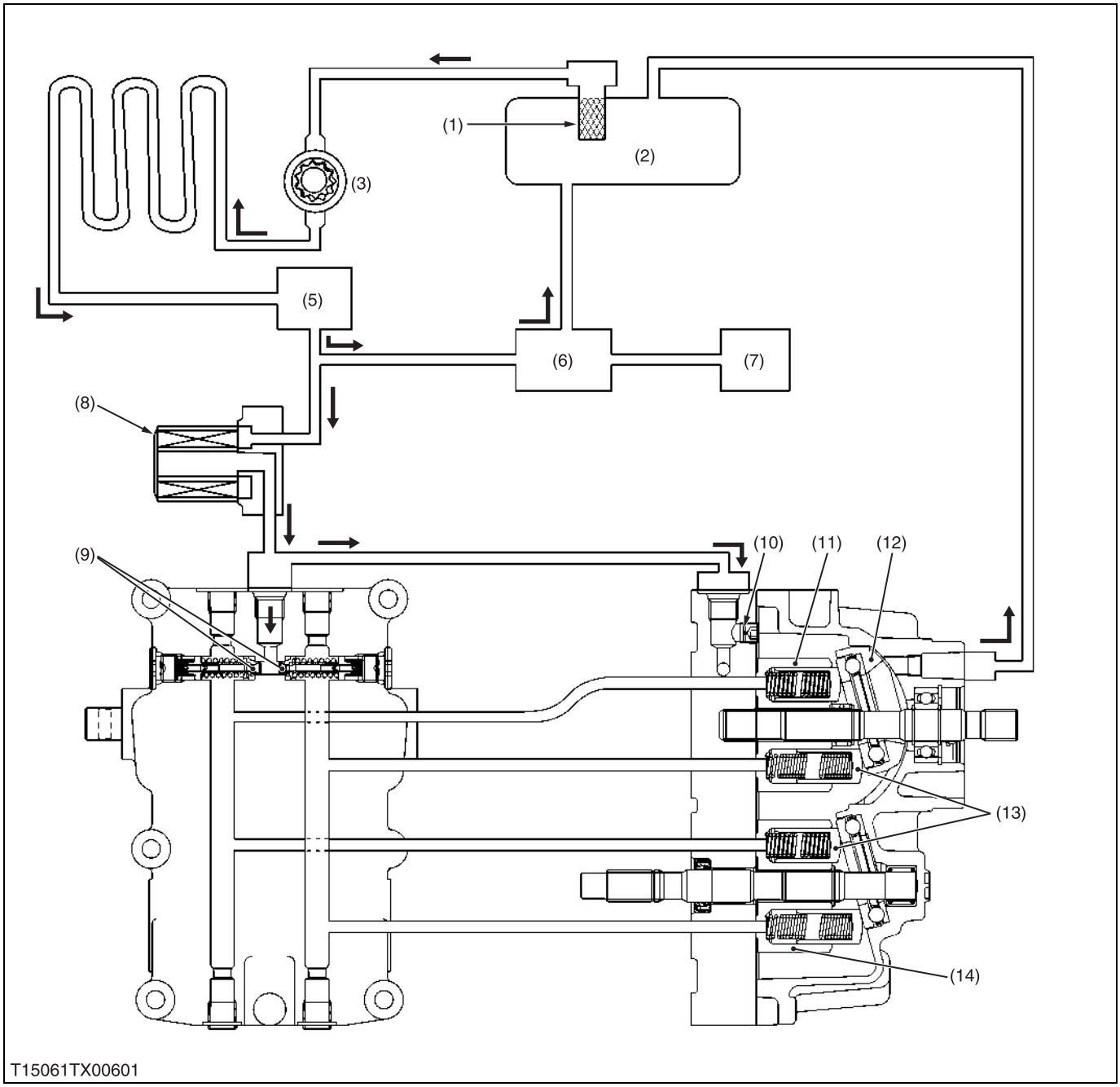


(1) Oil Strainer
(2) Transmission Case
(3) Hydraulic Pump
(4) Oil Cooler
(5) Control Valve
(6) Regulator Valve
(7) PTO Clutch
(8) Oil Filter Cartridge
(9) Check and High Pressure Relief Valve
(10) Lubricating Orifice
(11) Cylinder Block (Pump)
(12) Swashplate
(13) Piston
(14) Cylinder Block (Motor)

The pump and motor are joined in a closed hydraulic loop and most of oil circulates within the main oil circuit. A little oil lubricates and oozes out from the clearance between the moving parts of the case. Then oil in the main oil circuit of the HST needs to be supplied a want.

The charge oil sent from the hydraulic pump passes oil cooler and after that, the cooled oil is sent to the control valve. The oil is sent to the HST housing by passing the oil filter after pressure is controlled with the regulator valve.

The charge oil aids smooth operation of pistons for pump and motor. And overflow oil from HST housing return to the transmission case.

## (6) Power Trains Operation

**[Serial No. Affected: below 20000]**

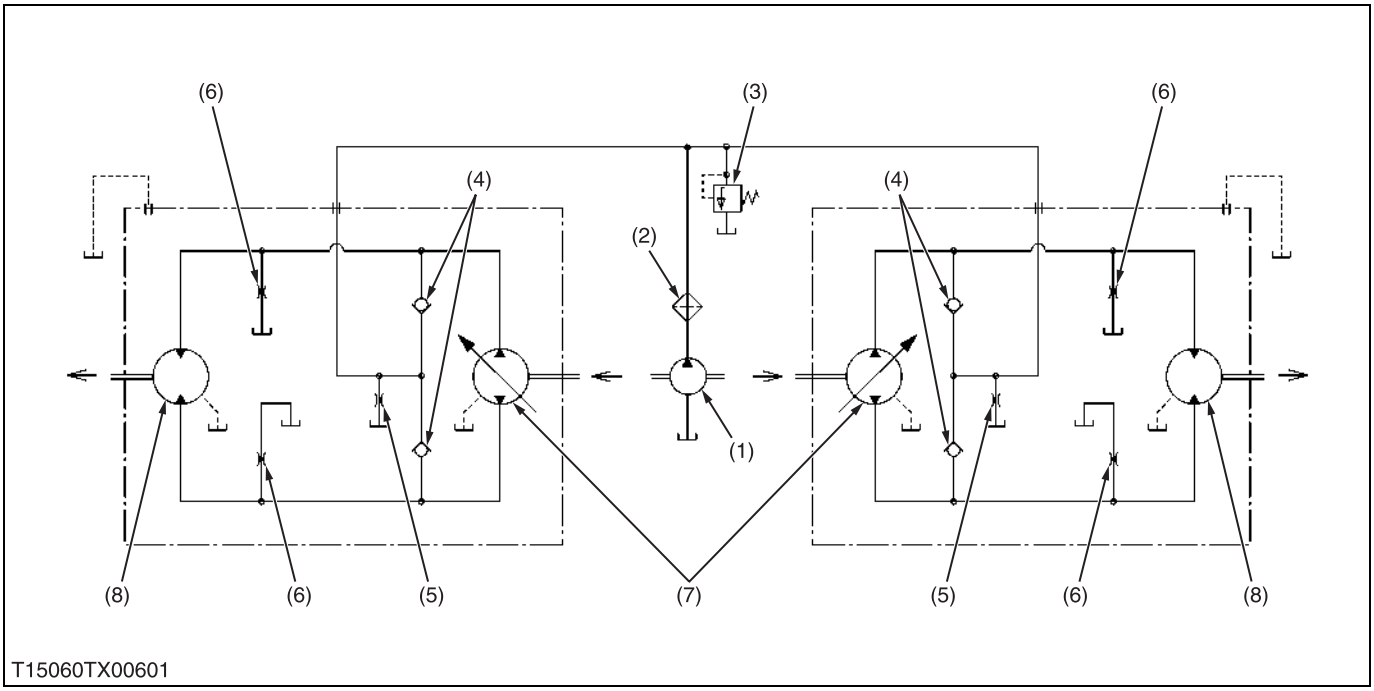


(1) Hydraulic Pump
(2) Oil Filter
(3) Regulator Valve
(4) Check Valve
(5) Lubricating Orifice
(6) Neutral Orifice
(7) Pump
(8) Motor

■ **Neutral**

With the control levers in the **NEUTRAL** position, the piston springs in the pump block in the pumps force the swash plates to a position that is parallel to the pump body. With the swash plates parallel to the pump body, the pistons do not reciprocate in the cylinder block, they merely rotate, and no oil is being drawn in or discharged from the pump. The machine is in a zero displacement position and the machine remains stationary.

Oil returning from the HST housing and hydraulic pump is directed through the regulating valve before returning to the transmission case.

■ **Forward**

As the control levers are pushed forward, the swash plates in the pumps move from the neutral position (parallel to the pump body) to a forward angle position. Piston springs inside the cylinder bores force the pistons against the swash plates.

As the cylinder block rotates, the pistons follow the contour of the swash plate, moving outward, drawing oil into their bores. As the cylinder block continues to rotate, the pistons are forced into their bores, discharging oil under pressure.

High-pressure oil from the pumps is routed to the motors, driving the machine forward.

■ **Reverse**

Reverse operation is accomplished by reversing the angle applied to the pump swash plates, reversing the flow of high-pressure oil to the motors.

**[Serial No. Affected: above 20001]**

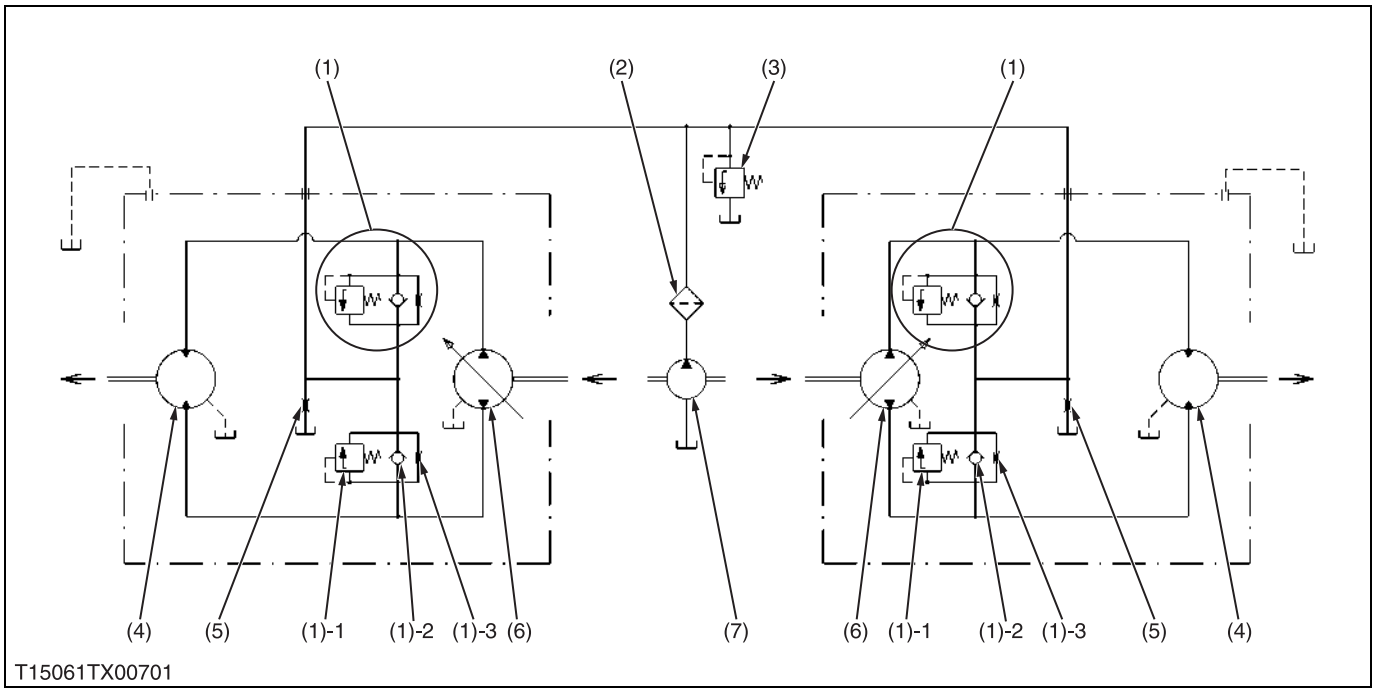


(1) Check and Relief Valve (with Neutral Orifice)
(1)-1 Relief Valve
(1)-2 Check Valve
(1)-3 Neutral Orifice
(2) Oil Filter
(3) Regulator Valve
(4) Motor
(5) Lubricating Orifice
(6) Pump
(7) Hydraulic Pump

■ **Neutral**

With the control levers in the **NEUTRAL** position, the piston springs in the pump block in the pumps force the swash plates to a position that is parallel to the pump body. With the swash plates parallel to the pump body, the pistons do not reciprocate in the cylinder block, they merely rotate, and no oil is being drawn in or discharged from the pump. The machine is in a zero displacement position and the machine remains stationary.

Oil returning from the HST housing and hydraulic pump is directed through the regulating valve before returning to the transmission case.

■ **Forward**

As the control levers are pushed forward, the swash plates in the pumps move from the neutral position (parallel to the pump body) to a forward angle position. Piston springs inside the cylinder bores force the pistons against the swash plates.

As the cylinder block rotates, the pistons follow the contour of the swash plate, moving outward, drawing oil into their bores. As the cylinder block continues to rotate, the pistons are forced into their bores, discharging oil under pressure.

High-pressure oil from the pumps is routed to the motors, driving the machine forward.

■ **Reverse**

Reverse operation is accomplished by reversing the angle applied to the pump swash plates, reversing the flow of high-pressure oil to the motors.

## (7) Control Linkage

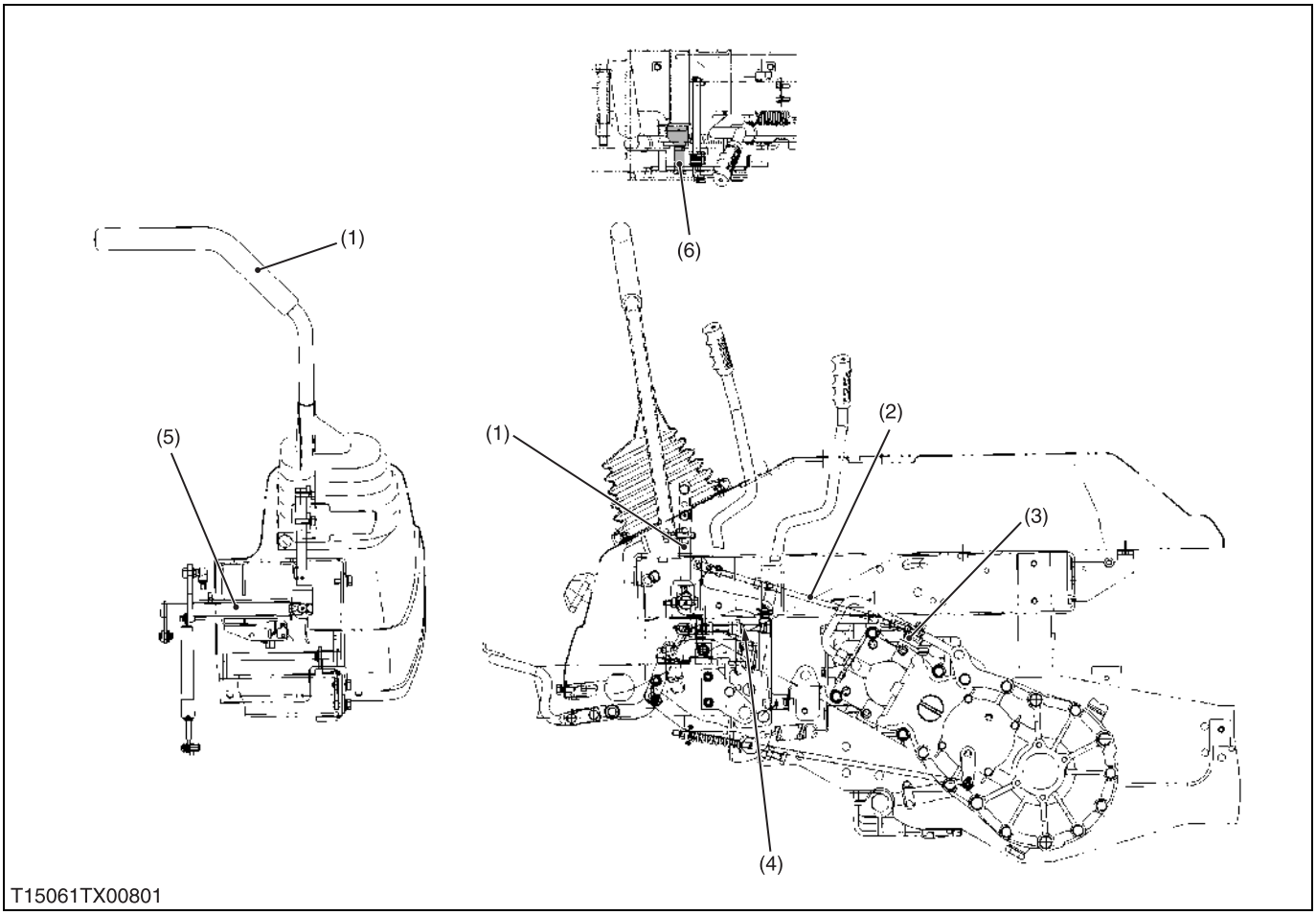


(1) Motion Control Lever
(2) Speed Control Rod
(3) Trunnion Arm
(4) Speed Limit Spring
(5) Speed Shaft
(6) Neutral Slot

The motion control lever (1) and the trunnion shaft of variable swashplate are linked with the speed shaft (5), speed control rod (2) and the trunnion arm (3). As the motion control lever (1) is pushed, the swashplate rotates and forward travelling speed increases. Pulling the motion control lever (1) increases reverse speed.

A neutral position can be requested by the thing to operate the motion control lever (1). Moreover, it is possible to fix to a neutral position by putting the motion control lever (1) in the neutral slot (6). The motion control lever (1) is pushed by the speed limit spring's (4) working when the motion control lever (1) is removed from the neutral slot (6). As the result, the machine synchronizes with the movement of the motion control lever (1) and begins to move slowly. (The machine is set like this.) The damper connected to the speed shaft (5) restricts the movement of the linkage to prevent abrupt operation or reversing.

■ **Steering**

The Zero-Turn Mower does not have a separate steering system. Steering is accomplished by varying the wheel motor speeds. This gives the machine a zero-turn capability.

As the control levers are moved to a full left turn position, the right hydraulic pump is moved to the full-speed forward position and the left pump is moved to the full-speed reverse position. This will allow the machine to pivot around its center.

## (8) Final Reduction Gear Section

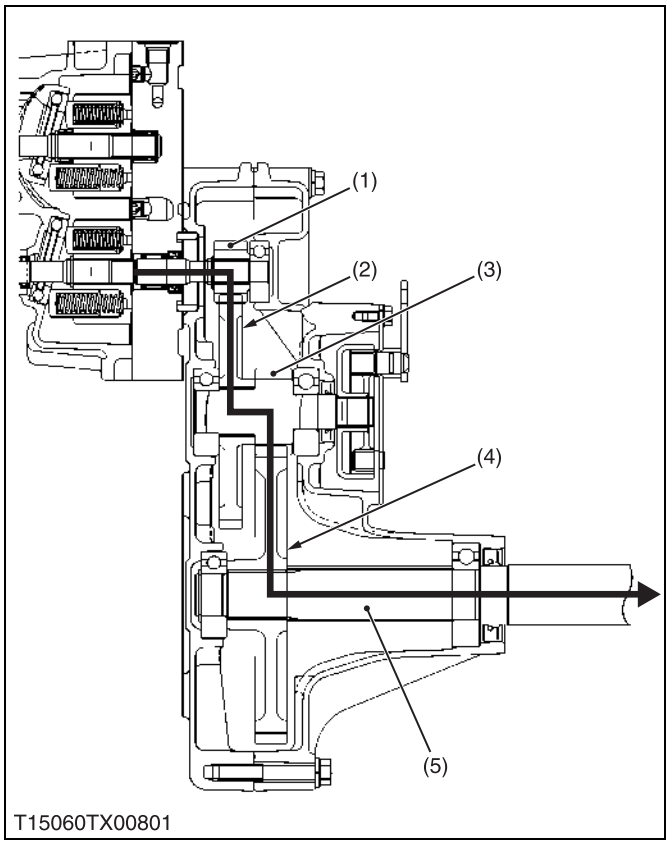


As for this machine, power is transmitted from the 12T gear (1) on the HST motor shaft to the rear axle (5) through 53T gear, 14T gear shaft and 57T gear.

(1) 12T Gear
(2) 53T Gear
(3) 14T Gear Shaft (Brake Shaft)
(4) 57T Gear
(5) Rear Axle

W1013563

## (9) PTO System

## (A) PTO Clutch and Valve

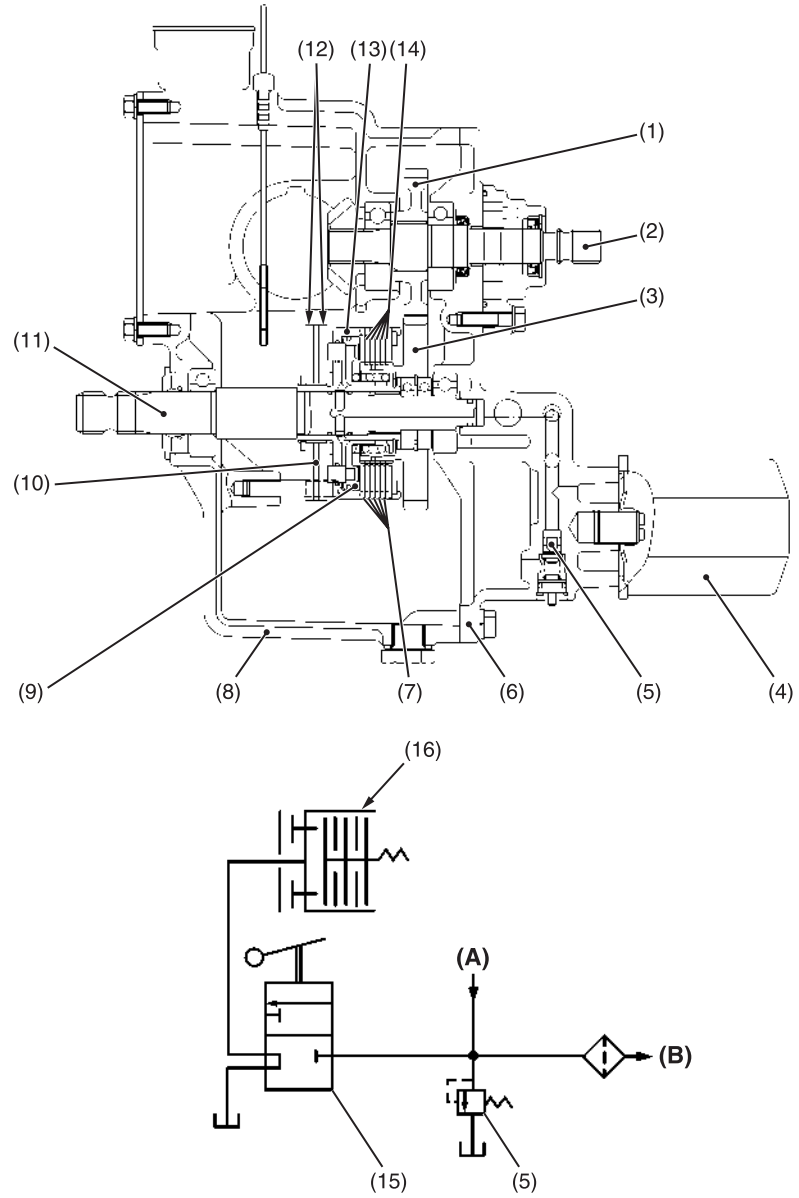


T15060TX00901

(1) 34T Gear (ZD18(F) · ZD21(F))
33T Gear (ZD28(F))
(2) Input Shaft
(3) 43T Gear (ZD18(F) · ZD21(F))
39T Gear (ZD28(F))
(4) Oil Filter Cartridge
(5) Regulator Valve
(6) Rear Cover
(7) Clutch Plate
(8) Transmission Case
(9) Piston
(10) PTO Brake Disc
(11) PTO Shaft
(12) PTO Brake Plate
(13) Clutch Case
(14) Clutch Disc
(15) PTO Clutch Valve
(16) PTO Clutch Pack

**(A) From Hydraulic Pump**
**(B) To Hydrostatic Transmission**

The ZD series equipped with hydraulic independent PTO clutch (wet multi-plates type). Therefore, the engine power could engage or disengage to the PTO shaft (11) without stopping the machine movement.

The PTO clutch pack (16) has five clutch discs (14), five clutch plates (7), pressure plate, clutch piston (9) and so on.

The clutch piston (9) is actuated by hydraulic oil flow from the hydraulic pump through regulator valve (5).

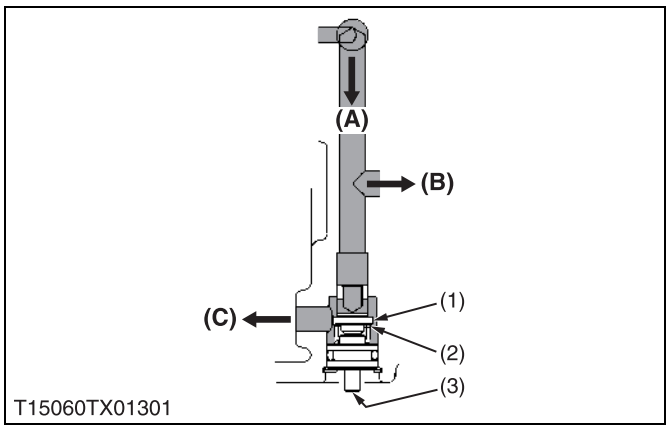


## ■ Regulator Valve

This machine is controlled with the regulator valve so that the oil sent from the hydraulic pump may become the setting pressure. And the oil flows into PTO clutch and hydrostatic transmission.

**(Reference)**

- Regulator valve setting pressure: 0.50 to 0.69 MPa
  5.0 to 7.0 kgf/cm$^2$
  71.1 to 99.6 psi

(1) Poppet
(2) Spring
(3) Plug

**(A) From Hydraulic Pump**
**(B) To Hydrostatic Transmission**
**(C) To Transmission Case**

W1014232

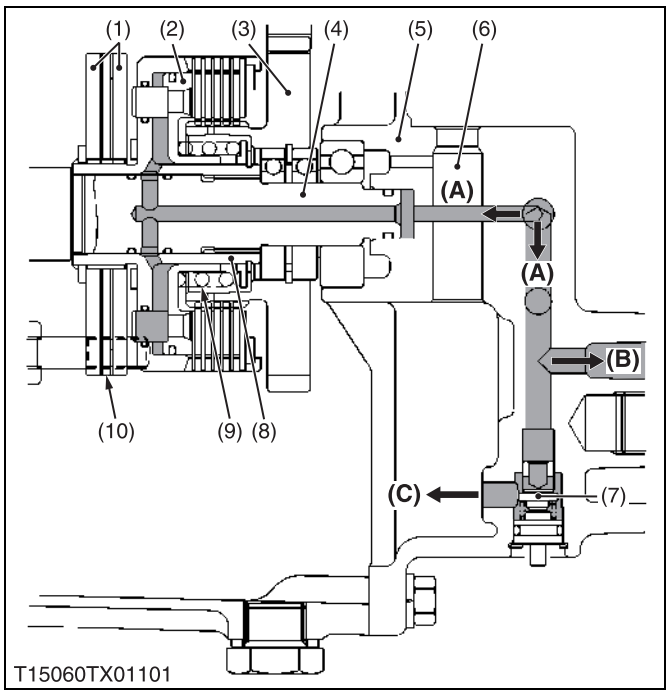


## ■ PTO Clutch "Engaged"

When the PTO clutch lever is set at the **"Engaged"** position, the PTO clutch valve (6) rotates and form the oil line to the PTO clutch pack.

Oil entering the clutch pack pushes the clutch piston (5) to engage the clutch pack.

(1) Brake Pressure Plate
(2) Clutch Piston
(3) Clutch Gear
(4) Clutch Shaft (PTO Shaft)
(5) Transmission Case
(6) PTO Clutch Valve
(7) Poppet
(8) Clutch Spline Boss
(9) Spring
(10) Brake Disc

**(A) From Hydraulic Pump**
**(B) To Hydrostatic Transmission**
**(C) To Transmission Case**

W1014380

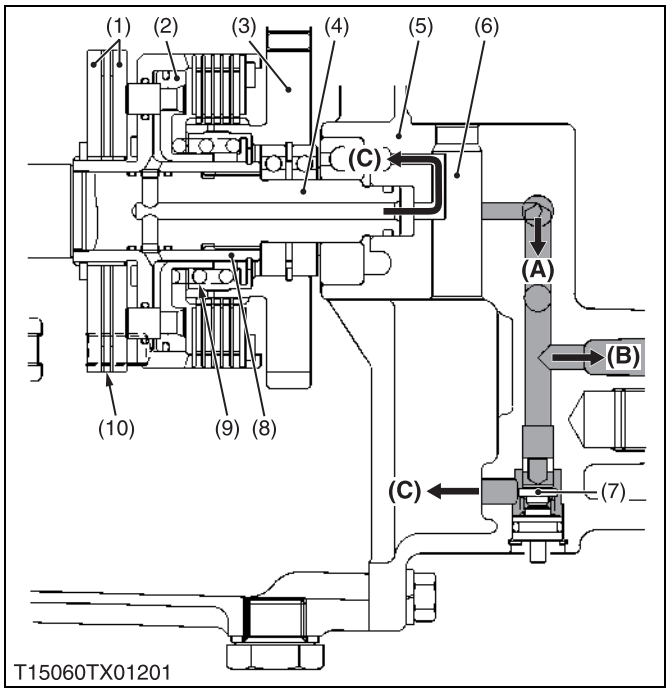


## ■ PTO Clutch "Disengaged"

When the PTO clutch lever is set at the **"Disengaged"** position, the PTO clutch valve (6) rotates and close the oil passage to the PTO clutch pack. The oil in the PTO clutch pack drained into the transmission case (5). Thus the clutch piston (2) is pushed back by the spring (9).

When the piston (2) is pushed back, the piston push to the brake pressure plate (1) so as to stop the rotation and drag of the PTO shaft (4).

(1) Brake Pressure Plate
(2) Clutch Piston
(3) Clutch Gear
(4) Clutch Shaft (PTO Shaft)
(5) Transmission Case
(6) PTO Clutch Valve
(7) Poppet
(8) Clutch Spline Boss
(9) Spring
(10) Brake Disc

**(A) From Hydraulic Pump**
**(B) To Hydrostatic Transmission**
**(C) To Transmission Case**

W1014560

## (B) Parking Brake

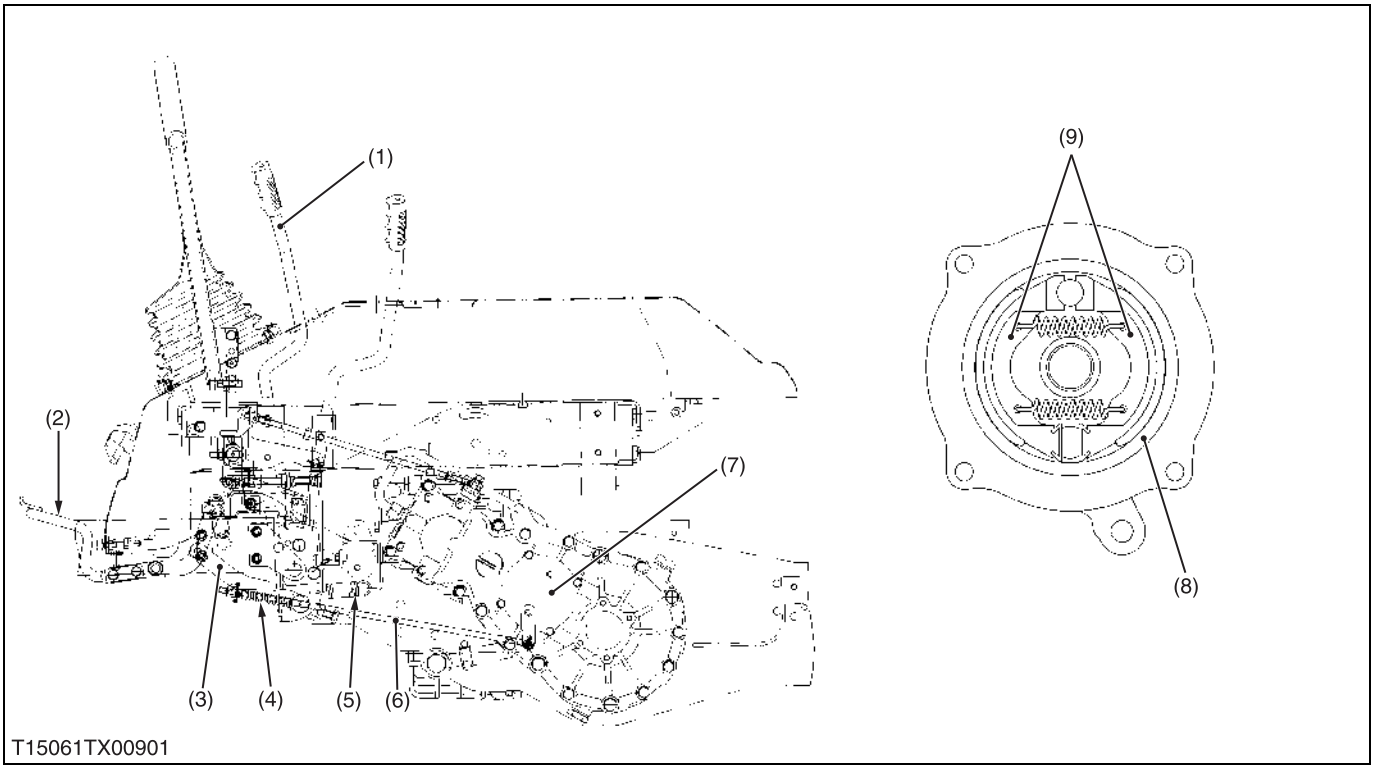


(1) Parking Brake Lever
(2) Parking Brake Lock Pedal
(3) Brake Plate
(4) Parking Brake Spring
(5) Return Spring
(6) Parking Brake Rod
(7) Brake Assembly
(8) Brake Drum
(9) Brake Shoe

The parking brake is composed of parking brake lever (1), parking brake lock pedal (2), brake plate (3), parking brake rod (6) and brake assembly (7). The brake is mechanical internal-expansion type with leading-trailing brake shoes (9).

As the parking brake lock pedal (2) is pressed and the parking brake lever (1) is lifted up, the brake will be applied and locked.

When the parking brake is released, the brake can be released if the parking brake lever is pulled back.

To prevent the brake from dragging when the parking brake is applied, this machine is designed so that the engine may stop if the parking brake lever (1) is not released within few seconds after the engine is started.

# SERVICING

## CONTENTS

# 1. TROUBLESHOOTING

| Symptom | Probable Cause | Solution | Reference Page |
|---|---|---|---|
| **Vehicle Will Not Stop in Neutral Position** | • Improper neutral adjustment<br>• Improper speed control rod adjustment | Adjust neutral<br>Adjust | 2-S5<br>2-S5 |
| **Vehicle Jerky and Noisy When Starting** | • Transmission oil insufficient<br>• Air entering from suction pipe<br>• Oil strainer clogged<br>• Transmission oil filter cartridge clogged<br>• Hydrostatic transmission defective | Replenish<br>Retighten<br>Clean<br>Replace<br>Replace | 2-S11<br>–<br>G-19<br>G-17<br>2-S15 |
| **Loss of Power** | • Control linkage defective<br>• Transmission oil insufficient<br>• Oil strainer clogged<br>• Transmission oil filter cartridge clogged<br>• Hydraulic pump defective<br>• Hydrostatic transmission defective | Repair or replace<br>Replenish<br>Clean<br>Replace<br>Replace<br>Replace | –<br>2-S11<br>G-19<br>G-17<br>2-S18<br>2-S15 |
| **System Operates in One Direction Only** | • Check valve defective<br>• Control linkage defective | Replace<br>– | 2-S22<br>– |
| **System Operating Hot** | • Transmission oil insufficient<br>• Oil strainer clogged<br>• Transmission oil filter cartridge clogged<br>• HST fan defective<br>• Overload working | Replenish<br>Clean<br>Replace<br>Replace<br>– | 2-S11<br>G-19<br>G-17<br>2-S13, S14<br>– |
| **Noise from Transmission** | • Transmission oil insufficient<br>• Gear worn<br>• Improper backlash between 16T or 18T bevel gear and 19T bevel gear<br>• Bearing worn | Replenish<br>Replace<br>Adjust<br><br>Replace | 2-S11<br>–<br>2-S24<br><br>2-S24 |

W1014322

**TRAVELLING GEAR SHIFT SECTION**

| Symptom | Probable Cause | Solution | Reference Page |
|---|---|---|---|
| **Noise from Transmission** | • Transmission oil insufficient<br>• Gear worn or broken<br>• Bearings worn | Refill<br>Replace<br>Replace | –<br>–<br>2-S24 |

W1014322

**PTO SECTION**

| | | | |
|---|---|---|---|
| **PTO Clutch Slip** | • Operating pressure is low<br>• PTO clutch valve malfunctioning<br>• Clutch disc or drive plate excessively worn | Check<br>Repair or replace<br>Replace | –<br>2-S18<br>2-S19 |
| **PTO Shaft Does Not Rotate** | • PTO clutch malfunctioning | Repair or replace | 2-S18 |
| **PTO Clutch Operating Pressure Is Low** | • Transmission oil improper or insufficient<br>• Regulator valve malfunctioning | Replenish or change<br>Check or replace | 2-S11<br>2-S20 |
| **PTO Clutch Drags** | • Brake plate excessively worn<br>• Clutch spring weaken or broken<br>• Deformation of pressure plate or steel plate | Replace<br>Replace<br>Replace | 2-S19<br>2-S19<br>2-S19 |

W1011614

**PARKING BRAKE SECTION**

| | | | |
|---|---|---|---|
| **Brake Drags** | • Brake spring play too small<br>• Brake return spring weaken or broken | Adjust<br>Replace | G-28<br>– |
| **Poor Braking Force** | • Brake spring play excessive<br>• Brake shoe worn<br>• Grease or oil on brake shoe | Adjust<br>Replace<br>Replace | G-28<br>2-S21<br>2-S21 |

W1011333

# 2. SERVICING SPECIFICATIONS

| Item | | Factory Specification | Allowable Limit |
|---|---|---|---|
| Regulator Valve | Setting pressure | 0.50 to 0.69 MPa<br>5.0 to 7.0 kgf/cm$^2$<br>71.2 to 99.6 psi | – |
| PTO Clutch | Operating pressure | 0.50 to 0.69 MPa<br>5.0 to 7.0 kgf/cm$^2$<br>71.2 to 99.6 psi | – |
| Check and High Pressure Relief Valve | Relief valve setting pressure | 28.4 to 29.4 MPa<br>290 to 300 kgf/cm$^2$<br>4125 to 4269 psi | |
| Creeping Speed<br>At Maximum Engine rpm | Wheel rotation | 8 to 10 rpm | – |
| Maximum Speed<br>At Maximum Engine rpm | Wheel rotation | 148 to 150 rpm | – |
| Motion Control Lever Alignment | Gap | 0 to 2 mm<br>0 to 0.08 in. | – |
| | Space | 10 to 20 mm<br>0.4 to 0.8 in. | – |
| 16T or 18T Bevel Gear to 19T Bevel Gear | Backlash | 0.20 to 0.30 mm<br>0.0078 to 0.0118 in. | – |

W1013874

# 3. TIGHTENING TORQUES

Tightening torques of screws, bolts and nuts on the table below are especially specified.
(For general use screws, bolts and nuts: See page G-8.)

| Item | N·m | kgf·m | ft-lbs |
|---|---|---|---|
| Motion control lever mounting bolt and nut | 17.7 to 20.6 | 1.8 to 2.1 | 13.0 to 15.2 |
| Hydrostatic transmission mounting screw | 39.3 to 44.1 | 4.0 to 4.5 | 28.9 to 32.5 |
| Rear wheel mounting nut | 48.0 to 56.0 | 4.9 to 5.7 | 35.4 to 41.2 |
| Universal joint mounting screw | 26.0 to 28.0 | 2.7 to 2.9 | 19.2 to 20.7 |
| Transaxle and rear axle case mounting screw | | | |
| M12 7T Aluminum | 62.7 to 72.5 | 6.4 to 7.4 | 46.3 to 53.5 |
| M10 7T Aluminum | 39.3 to 44.1 | 4.0 to 4.5 | 28.9 to 32.5 |
| M12 7T | 77.5 to 90.2 | 7.9 to 9.2 | 57.2 to 66.5 |
| M10 7T | 48.0 to 55.9 | 4.9 to 5.7 | 35.4 to 41.2 |
| Hydraulic pump housing mounting screw | 17.7 to 20.5 | 1.8 to 2.1 | 13.1 to 15.1 |
| Center cover mounting screw | 39.3 to 44.1 | 4.0 to 4.5 | 28.9 to 32.5 |
| Center section mounting hex. socket head screw | 17.7 to 20.5 | 1.8 to 2.1 | 13.1 to 15.1 |
| Check valve plug | 24.5 to 34.3 | 2.5 to 3.5 | 18.1 to 25.3 |
| Check and High Pressure Relief Valve Plug | 24.5 to 34.3 | 2.5 to 3.5 | 18.1 to 25.3 |

W1012736

# 4. CHECKING AND ADJUSTING

**Checking Neutral**

1. Park machine safely.
2. Set the motion control levers are in the **NEUTRAL** position.
3. Move the PTO lever to **OFF** position and apply the parking brake.
4. With the operator on the seat and start the engine.
5. Move the throttle lever to **Max. speed** position.
6. Release the parking brake.
7. Check the drive wheels, the wheels should not move.
8. If movements is noted, perform adjustment as follows.

W1013323

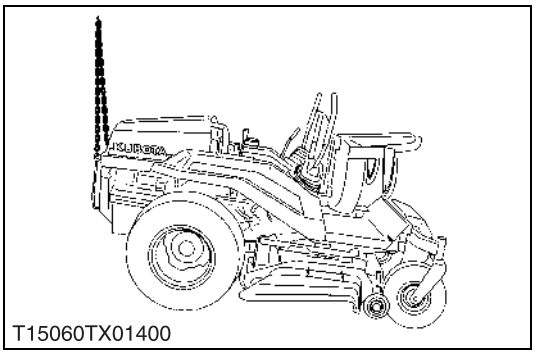
T15060TX01400

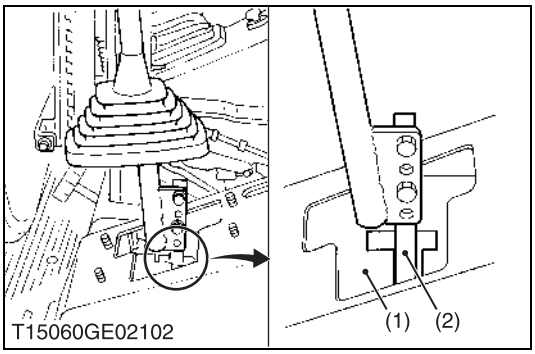

T15060GE02102

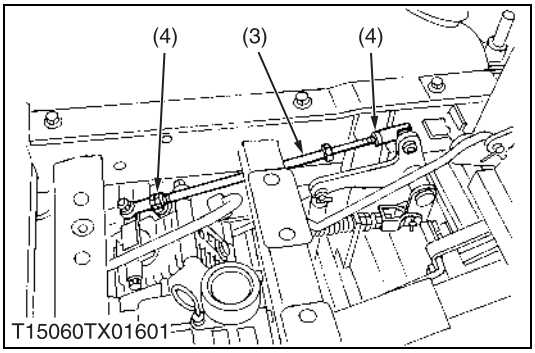

T15060TX01601

**Adjusting Neutral**

**CAUTION**

**To avoid personal injury:**

- **Park the machine on a hard and level surface.**
- **If it is necessary to run engine in an enclosed area, use a gas tight exhaust pipe extension to remove the fumes.**
- **Always try to work in a well-ventilated area.**
- **Lift up and secure with jack stands or blocking the rear of the machine, do not run the machine while adjusting.**
- **Do not adjust only one of the following adjustment; exclude "MOTION CONTROL LEVER POSITION". They are relative each other.**

1. Turn key switch to **OFF** position.
2. Apply the parking brake.
3. Set the motion control levers (2) to **Neutral lock** position.
4. Remove the set knobs of seat frame, then raise and latch the seat assembly.
5. Remove the connector from the seat safety switch, then **temporarily** install a jumper wire across the terminals in the connector of the wiring harness.
6. Raise the rear of machine and block up so that rear wheel can rotate freely.
7. Loosen the lock nuts from the ball joints on the two rods.
8. Start the engine.
9. Move the throttle lever to **Max. speed** position.
10. Release the parking brake.
11. Adjust the speed control rod (3) length by rotating the double nuts on the rod appropriate direction until the rear wheel no rotation from reverse rotation.
12. The left rod assembly controls left wheel and the right rod assembly controls right wheel.
13. Repeat on opposite side of unit, tighten lock nuts (4) securely against ball joint.
14. Shut off the machine. Remove jumper wire from wire harness connector and plug connector or into seat safety switch.

■ **IMPORTANT**

- **The right and left motion control lever (2) can be adjusted independently.**
- **This machine has a creep speed.**

(1) Guide Plate
(2) Motion Control Lever
(3) Speed Control Rod
(4) Lock Nut

W1013453

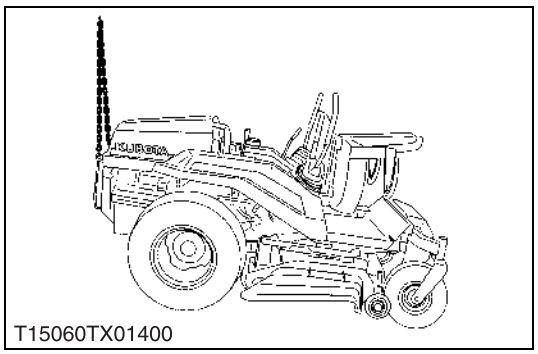
T15060TX01400

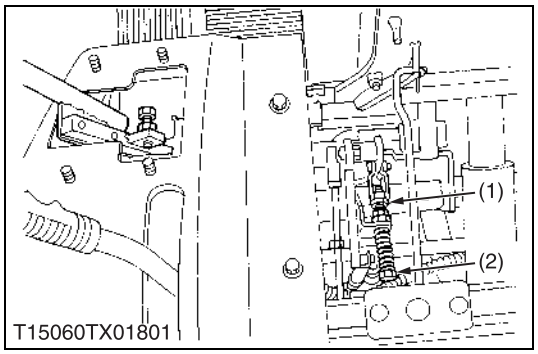

T15060TX01801

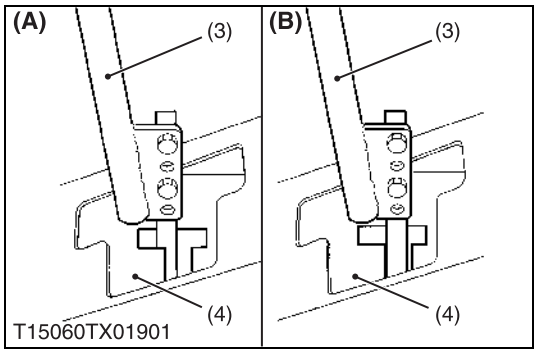

T15060TX01901

## Checking Creep in Forward

**CAUTION**

**To avoid personal injury:**

- **Park the machine on a hard and level surface.**
- **If it is necessary to run engine in an enclosed area, use a gas tight exhaust pipe extension to remove the fumes.**
- **Always try to work in a well-ventilated area.**
- **Lift up and secure with jack stands or blocking the rear of the machine, do not run the machine while adjusting.**
- **Do not adjust only one of the following adjustment; exclude "MOTION CONTROL LEVER POSITION". They are relative each other.**

1. Turn key switch to **OFF** position.
2. Apply the parking brake.
3. Set the motion control lever (3) to **Neutral lock** position.
4. Remove the set knobs of seat frame, then raise and latch the seat assembly.
5. Remove the connector from the seat safety switch, then **temporarily** install a jumper wire across the terminals in the connector of the wiring harness.
6. Raise the rear of machine and block up so that rear wheel can rotate freely.
7. Start the engine.
8. Move the throttle lever to **Max. speed** position.
9. Release the parking brake.
10. Pull the motion control lever (3) to reverse maximum position from **NEUTRAL** position and release the motion control lever (3).
11. Measure the wheel rotation.
12. Loosen the lock nut (1) and adjust the creep speed control bolt (2) length so that the axle rotation is between 8 to 10 revolutions per minute.
13. Lock the nut.
14. Check the wheel creep rpm again.
15. Adjust other side **"CREEP SPEED"** equally.
16. After adjustment, be sure to stop the engine immediately.

■ **IMPORTANT**

- **The right and left motion control lever (3) can be adjusted independently.**

| | | |
|---|---|---|
| Wheel rotation | Factory spec. | 8 to 10 rpm<br>at max. engine speed |

■ **NOTE**

- **Because the adjustment valve might change into the adjustment for a long time by the weight of the motion control lever (3), it is a noted thing.**

(1) Lock Nut
(2) Creep Speed Control Bolt
(3) Motion Control Lever
(4) Guide Plate

**(A) CREEP Position**
**(B) NEUTRAL Position**

W1013700

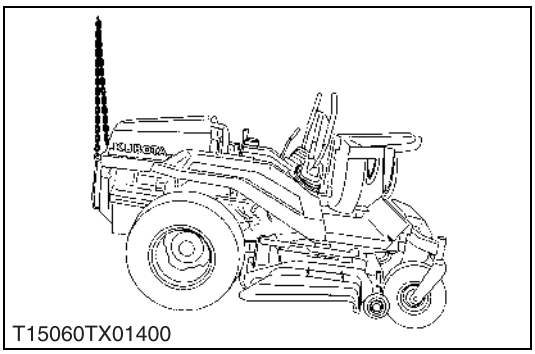
T15060TX01400

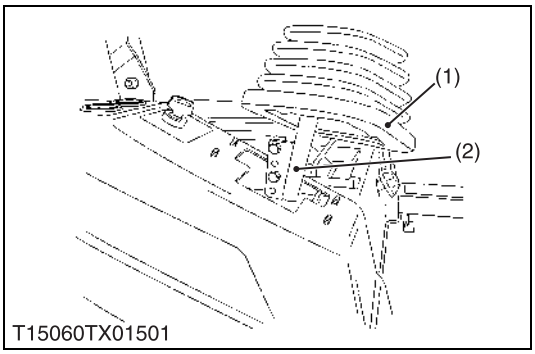

T15060TX01501

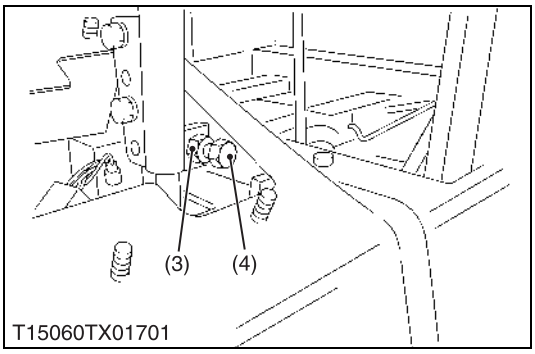

T15060TX01701

## Adjusting Maximum Speed

**CAUTION**

**To avoid personal injury:**

- **Park the machine on a hard and level surface.**
- **If it is necessary to run engine in an enclosed area, use a gas tight exhaust pipe extension to remove the fumes.**
- **Always try to work in a well-ventilated area.**
- **Lift up and secure with jack stands or blocking the rear of the machine, do not run the machine while adjusting.**
- **Do not adjust only one of the following adjustment; exclude "MOTION CONTROL LEVER POSITION". They are relative each other.**

1. Turn key switch to **OFF** position.
2. Apply the parking brake.
3. Set the motion control lever (2) to **Neutral lock** position.
4. Remove the set knobs of seat frame, then raise and latch the seat assembly.
5. Remove the connector from the seat safety switch, then **temporarily** install a jumper wire across the terminals in the connector of the wiring harness.
6. Remove the motion control lever boots (1).
7. Raise the rear of machine and block up so that rear wheel can rotate freely.
8. Start the engine.
9. Move the throttle lever to **Max. speed** position.
10. Push the motion control lever (2) to the front until the speed set bolt (4) comes into contact with the stopper plate.

■ **NOTE**

- **At this time, the thing that the speed set bolt (4) touches the stopper plate is.**

11. Measure the rotations of rear wheel.
12. If the measurement is not within the factory specifications, loosen the lock nut (3) and adjust the length of speed set bolt (4).

| | | |
|---|---|---|
| Max. speed:<br>Wheel rotation | Factory spec. | 148 to 150 rpm<br>at max. engine speed |

■ **NOTE**

- **The right and left speed set bolt can be adjusted independently.**

(1) Boot
(2) Motion Control Lever
(3) Lock Nut
(4) Speed Set Bolt

W1014192

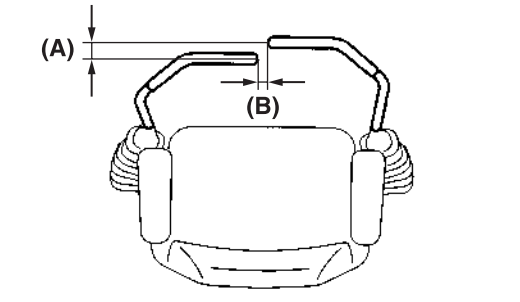

T15060TX02001

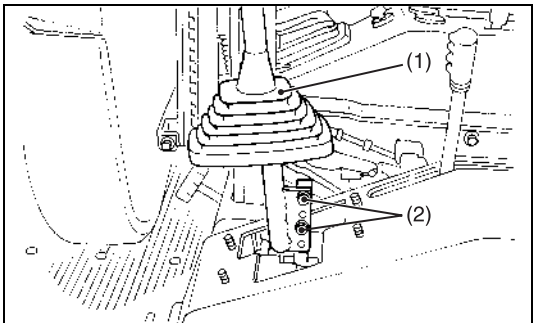

T15060TX02101

## Checking Motion Control Lever Alignment

**CAUTION**

- **When checking, park the tractor on flat ground, apply the parking brake.**

1. Check the gap **(A)** and space **(B)** between the motion control levers, at the maximum forward position.
   If positions of the motion control levers are unequal, an adjustment is necessary.

**When adjusting alignment**

1. Stop the engine and apply the parking brake.
2. Loosen the nut and remove the boot (1).

■ **Lever position (High or Low)**

3. Remove the screw (2) and select the motion control lever position, high or low.
4. Tighten the screw (2) and install the boot (1).

■ **Lever alignment (Right and Left)**

3. Loosen the screws (2).
4. Slide both motion control levers forward or rearward to desired position within tab slots until levers are aligned.
5. Tighten the screws (2).

| | | |
|---|---|---|
| Gap **(A)** | Factory spec. | 0 to 2 mm<br>0 to 0.08 in. |
| Space **(B)** | | 10 to 20 mm<br>0.4 to 0.8 in. |

■ **NOTE**

- **If the ends of the levers strike against each other while in the "NEUTRAL" position, move the levers outward to the "NEUTRAL LOCK" position and carefully bend them outward.**
  **Move them back to the "NEUTRAL" position and check for the recommended space.**

(1) Boot
(2) Motion Control Lever Mounting Screw
**(A) Gap**
**(B) Space**

W1029709

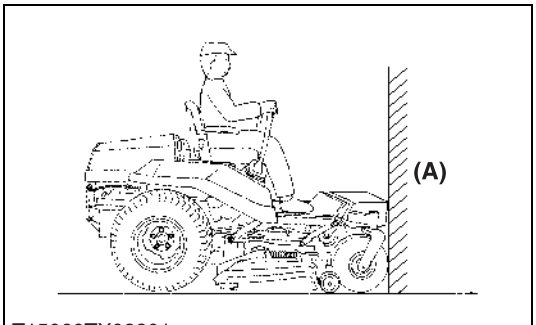

T15060TX02201

## Checking Hydrostatic Transmission [Serial No. Affected: below 20000]

1. Bring the machine on the ground or on the grass land (not on the asphalt or concrete surface).
2. Remove the front cover.
3. Attach a wooden piece to the front of frame and touch the front of the machine to the wall.
4. Start the engine and run at the maximum speed.
5. Push the motion control lever forward and check to see that the rear wheel slip.
6. If the rear wheel does not slip, repair or replace the hydrostatic transmission.

**(A) Wall**

W1014787

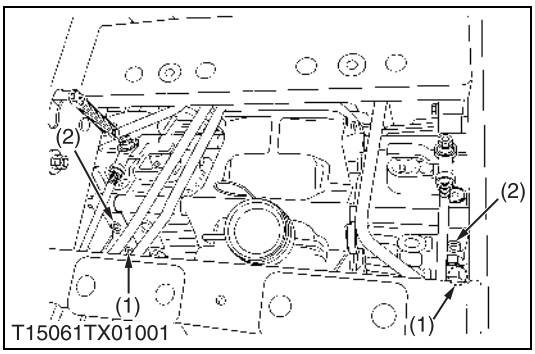


**Checking Hydrostatic Transmission**
**[Serial No. Affected: above 20001]**

**CAUTION**

- **When checking, park the machine on flat ground, apply the parking brake.**
- **Sit on operator's seat for checking.**

1. After worming up the machine, apply the parking brake and set the stop wood (chock) to the rear wheels.
2. Remove the plug (1) from the HST and set the HST adaptor. Then install the pressure gauge.

■ **NOTE**

- **Note that the allen wrench does not come off firmly because the plug is not loose hard. Otherwise, the plug (1) might be damaged, and the plug not be loosened.**

3. The safety switch for motion control lever is **temporarily** turned on, and the state which can be checked is made.
4. Start the engine.
5. Move the throttle lever to Max. speed position.
6. Grasp the motion control lever and move then inward from **"NEUTRAL LOCK"** position to position and then slowly push forward. And measure the pressure of HST.
7. At this time, if pressure rise to 19.6 MPa (200 kgf/cm$^2$, 2845 psi), it is assumed OK.

■ **NOTE**

- **If pressure exceeds 29.4 MPa (300 kgf/cm$^2$, 4269 psi), rear wheel can not be locked with parking brake. Please fix the rear wheel hub with the stick etc., prevent the rear wheel rotating, and measure the pressure at time.**

8. If the operation pressure does not rises to 19.6 MPa (200 kgf/cm$^2$, 2845 psi), repair or replace the HST.

**(Reference)**

| | | |
|---|---|---|
| Check and high pressure relief valve pressure | Factory spec. | 28.4 to 29.4 MPa<br>290 to 300 kgf/cm$^2$<br>4125 to 4269 psi |

■ **IMPORTANT**

- **When the check and high pressure relief valve pressure is measured, the thing that the relief valve is not operated continuously for 5 seconds or more. Otherwise, HST might to break.**

(1) Plug (Forward Side) (2) Plug (Reverse Side)

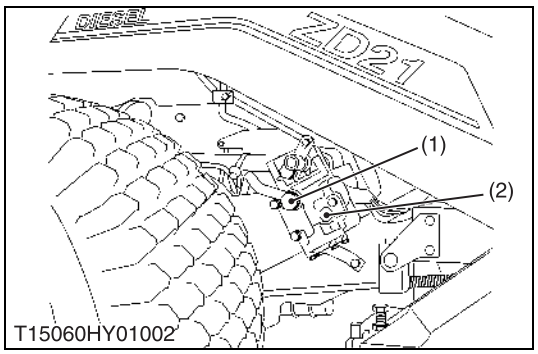

T15060HY01002

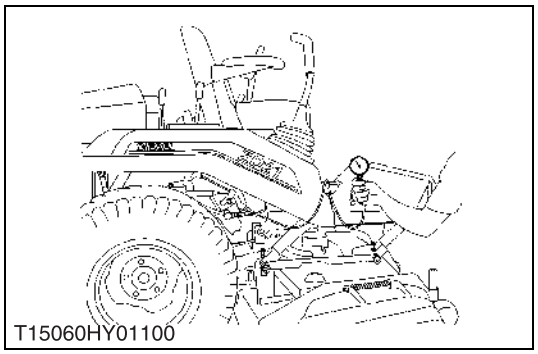
T15060HY01100

## PTO Clutch Operating Pressure (Hydrostatic Transmission Charge Pressure)

**CAUTION**

- **When checking, park the tractor on flat ground, apply the parking brake.**

1. Remove the eye joint bolt (1), then install the adaptor cable and pressure gauge.
2. Start the engine and set at maximum speed.
3. At this time, read the pressure gauge.
4. If the pressure is not within the factory specifications, check the regulator valve and related hydraulic components.

| | | |
|---|---|---|
| PTO clutch operating pressure | Factory spec. | 0.50 to 0.69 MPa<br>5.0 to 7.0 kgf/cm$^2$<br>71.2 to 99.6 psi |

**Condition**

- Engine speed …… Maximum
- Oil temperature … 45 to 55 °C
  113 to 131 °F

(1) Eye Joint Bolt (2) Control Valve

W1014889

## Checking Parking Brake

1. See page G-28.

W1015239

# 5. DISASSEMBLING AND ASSEMBLING

## [1] SEPARATING TRANSAXLE

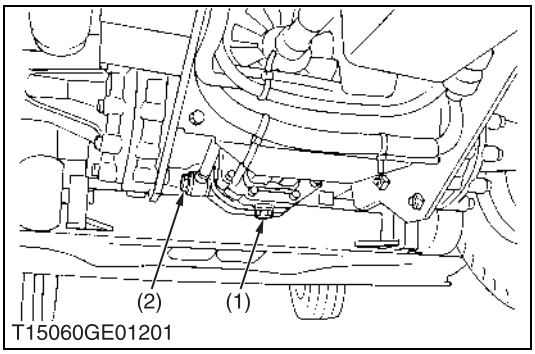


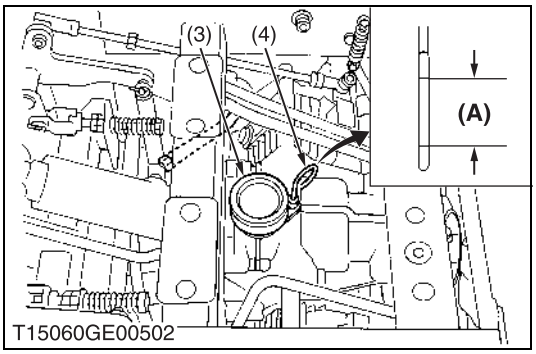


### Draining Transmission Fluid

**CAUTION**

- **Be sure to stop the engine before changing the transmission fluid.**

1. Place an oil pan underneath the transmission case.
2. Remove the drain plugs (1) at the bottom of the transmission case and drain the oil completely.
3. After draining, screw in the drain plug.
4. Fill new oil from filling port after removing the filling plug (3) up to the upper notch on the dipstick.
5. After running the engine for a few minutes, stop it and check the oil level again, if low, add oil to prescribed level.

■ **IMPORTANT**

- **Use only multi-grade transmission oil. Use of other oils may damage the transmission or hydraulic system.**
  **Refer to "LUBRICANTS, FUEL AND COOLANT". (See page G-7.)**
- **Never work the tractor immediately after changing the transmission oil. Keeping the engine at medium speed for a few minutes prevents damage to the transmission.**
- **Do not mix different brands oil together.**

| | |
|---|---|
| Transmission fluid capacity | 4.0 L<br>4.2 U.S.qts.<br>3.5 Imp.qts. |

(1) Drain Plug
(2) Transmission Strainer
(3) Oil Plug and Breather Cup
(4) Dipstick

**(A) Oil level acceptable within this range.**

W1015312

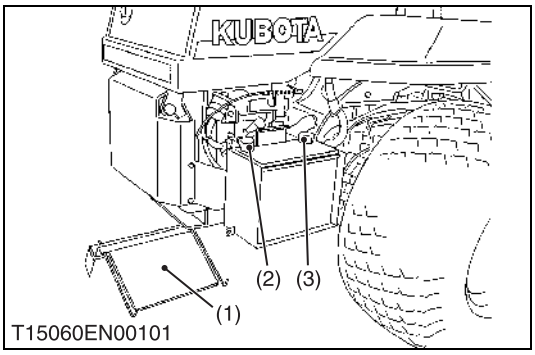


### Battery

**CAUTION**

- **When disconnecting the battery cables, disconnect the negative cable from the battery first. When connecting, connect the positive cable to the battery first.**

1. Remove the battery cover (1).
2. Disconnect the negative cable (3) from the battery.
3. Disconnect the positive cable (2) from the battery.

(1) Battery Cover
(2) Positive Cable
(3) Negative Cable

W1015334

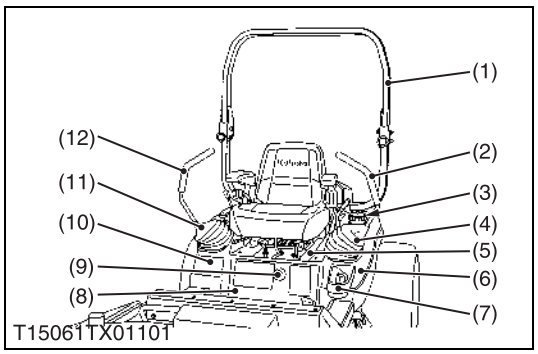


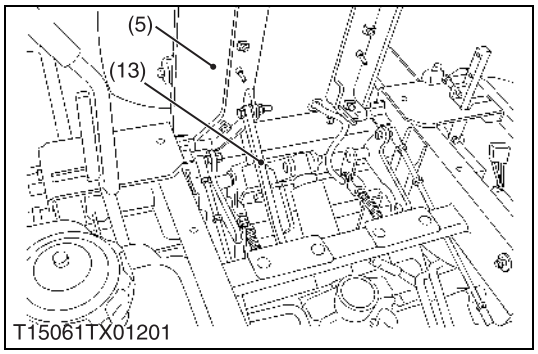


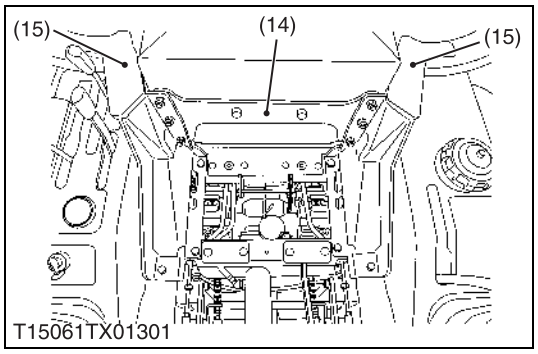


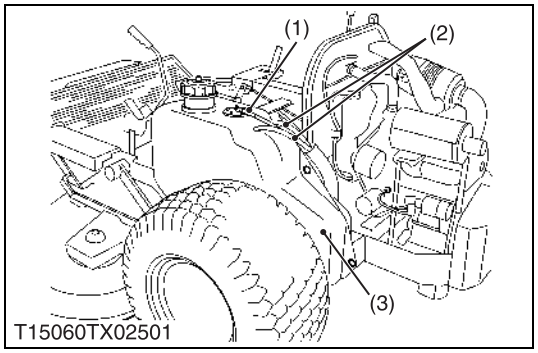


## Seat, ROPS, Motion Control Levers, Fenders and Others

1. Disconnect the seat safety switch.
2. Remove the seat open rod (13) and seat assembly with seat frame (5).
3. Remove the ROPS upper (1). (ROPS Models)
4. Remove the beam (14) for ROPS lower. (ROPS Models)
5. Remove the ROPS lower (15). (ROPS Models)
6. Remove the cutting height adjusting knob (9) and center frame (8).
7. Remove the motion control lever boot (RH) (11) and motion control lever (RH) (12).
8. Disconnect the wire harness from fender (RH) and remove the fender (RH) (10).
9. Remove the fuel tank cap (3), motion control lever boot (LH) (4) and cap holder (7) and motion control lever (LH) (2).
10. Remove fender (LH) (6).

(1) ROPS Upper
(2) Motion Control Lever (LH)
(3) Fuel Tank Cap
(4) Motion Control Lever Boot
(5) Seat Frame
(6) Fender (LH)
(7) Cap Holder
(8) Center Frame
(9) Cutting Height Adjusting Knob
(10) Fender (RH)
(11) Motion Control Lever Boot
(12) Motion Control Lever (RH)
(13) Seat Open Rod
(14) ROPS Beam
(15) ROPS Lower

W1019046

## Fuel Tank

1. Disconnect the lead wire (1) from fuel level sensor and fuel hoses (2) from the fuel tank.
2. Remove the fuel tank (3).

(1) Lead Wire
(2) Fuel Hose
(3) Fuel Tank

W1015458

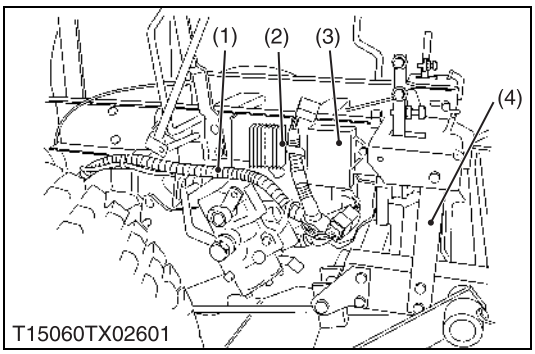


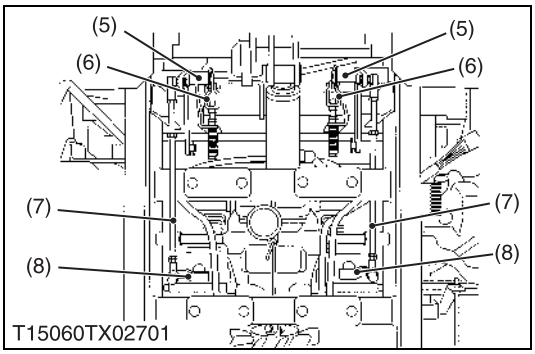


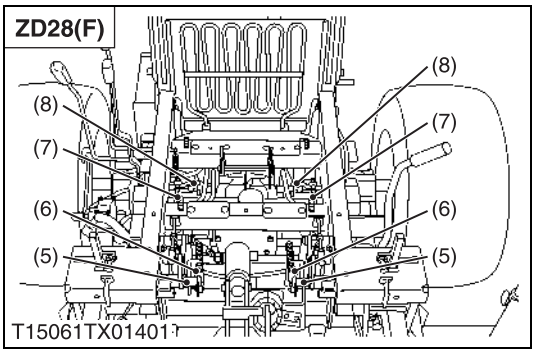


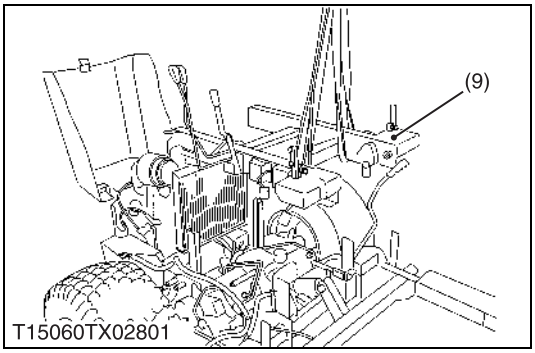


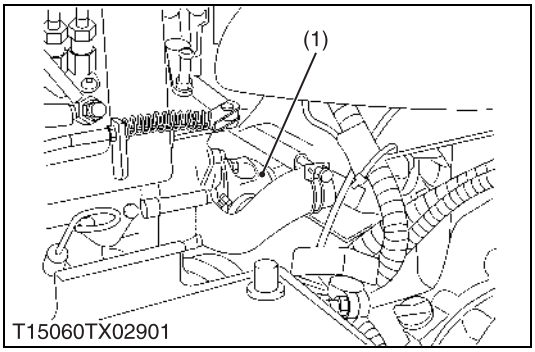


## Upper Frame

1. Disconnect the connectors from limit switches.
2. Disconnect the connectors from regulator (2) and combination box (3), then remove the wire harness (1) from upper frame.
3. Remove the PTO rod, lift rod and disconnect the throttle wire.
4. Remove the end of speed control rods (7) from both HST levers (8).
5. Remove the rue rings and clevis pins from both yokes (6).
6. Remove the rue rings and dampers from both speed control shafts (5).
7. Remove the connecting plate (4).
8. Remove the upper frame (9).

(1) Wire Harness
(2) Regulator
(3) Combination Box
(4) Connecting Plate
(5) Speed Control Shaft
(6) Yoke
(7) Speed Control Rod
(8) HST Lever
(9) Upper Frame

W1015520

## Universal Joint and Under Frame [ZD18(F) · ZD21(F)]

1. Unscrew the universal joint (1) mounting screws from engine side, then remove the propeller shaft (rear) first.
2. Remove the propeller shaft from transmission side.
3. Remove the clamp for fuel hoses and wire harness. (ZD18F · ZD21F)
4. Remove the under frame. (ZD18F · ZD21F)

**(When reassembling)**

| | | |
|---|---|---|
| Tightening torque | Universal joint mounting screw | 26.0 to 28.0 N·m<br>2.7 to 2.9 kgf·m<br>19.2 to 20.7 ft-lbs |

(1) Universal Joint

W1015713

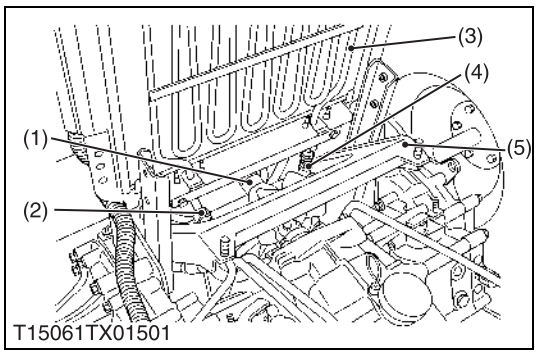

T15061TX01501

## Universal Joint and Under Frame [ZD28(F)]

1. Remove the propeller shaft (1).
2. Remove the clamp for fuel hoses, wire harness and delivery hose (4).
3. Disconnect the delivery hose (4) from oil cooler (3).
4. Disconnect the delivery pipe from oil cooler and remove the delivery pipe (2).
5. Remove the under frame (5). (ZD28F)

**(When reassembling)**

| | | |
|---|---|---|
| Tightening torque | Universal joint mounting screw | 26.0 to 28.0 N·m<br>2.7 to 2.9 kgf·m<br>19.2 to 20.7 ft-lbs |

(1) Propeller Shaft
(2) Delivery Pipe
(3) Oil Cooler
(4) Delivery Hose
(5) Under Frame

W1021143

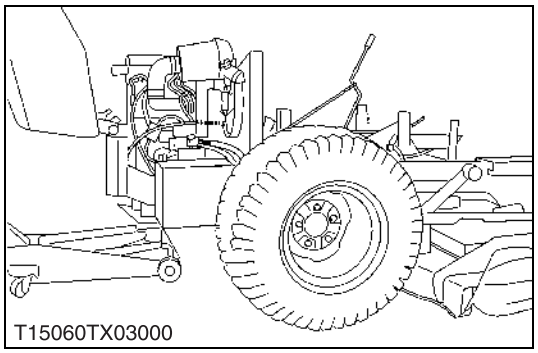
T15060TX03000

## Separate the Transaxle Assembly

1. Remove the hydraulic hose from hydraulic cylinder.
2. Disconnect the both brake rods.
3. Raise the rear of machine and block up.
4. Remove the rear wheels.
5. Hold the transaxle assembly with chain and crane.
6. Remove the transaxle assembly (1) mounting screws and separate it.

**(When reassembling)**

| | | |
|---|---|---|
| Tightening torque | Transaxle assembly mounting screw | 77.5 to 90.2 N·m<br>7.9 to 9.2 kgf·m<br>57.2 to 66.5 ft-lbs |
| | Rear wheel mounting nut | 48.0 to 56.0 N·m<br>4.9 to 5.7 kgf·m<br>35.4 to 41.2 ft-lbs |

(1) Transaxle Assembly

W1015817

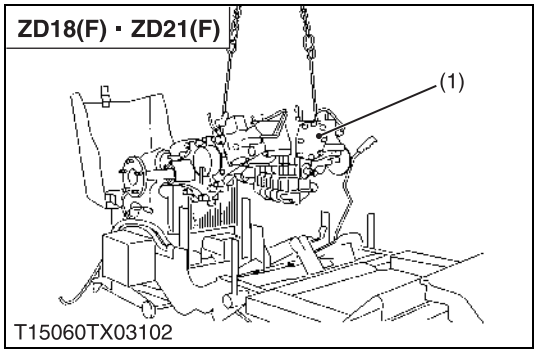

T15060TX03102

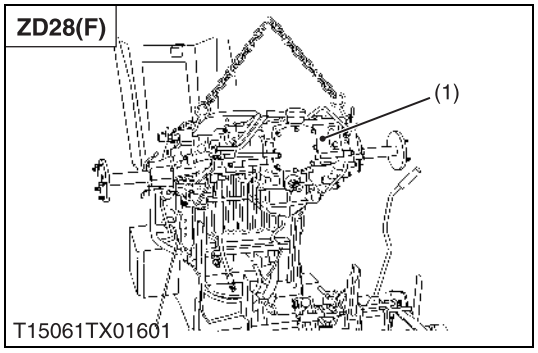

T15061TX01601

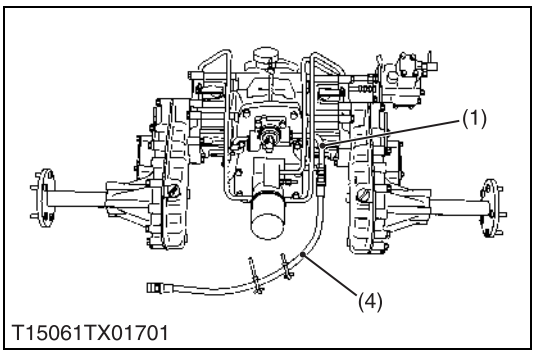


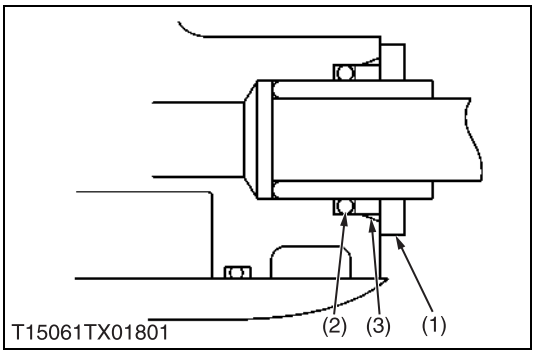


## Hydraulic Pipes

1. Remove the delivery hose (4) and pipe as a unit.
2. Remove the hydraulic pipes.

**(When reassembling)**

- Take care not to damage the O-rings.

■ **NOTE**

- **When installing the O-ring and coller (3), note the position of O-ring onto the delivery pipe shown in the figure.**

(1) Delivery Pipe
(2) O-ring
(3) Coller
(4) Delivery Hose

W1016058

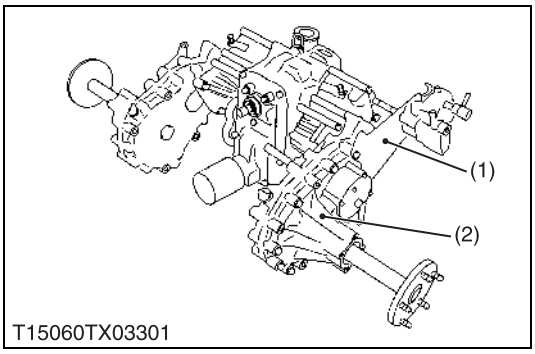


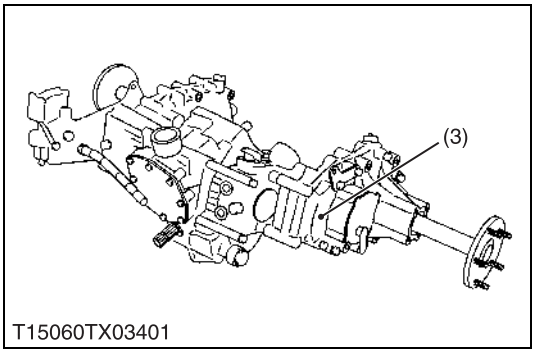


## Rear Axle Case

1. Remove the control valve bracket (1).
2. Remove the rear axle case assembly (RH).
3. Remove the rear axle case assembly (LH).

**(When reassembling)**

- Take care not to damage the O-rings.
- The direction of the 12T gear is noted (Flat face to hydrostatic transmission side).

| | | |
|---|---|---|
| Tightening torque | Rear axle assembly mounting screw | 39.3 to 44.1 N·m<br>4.0 to 4.5 kgf·m<br>28.9 to 32.5 ft-lbs |

(1) Bracket
(2) Rear Axle Case Assembly (RH)
(3) Rear Axle Case Assembly (LH)

W1016171

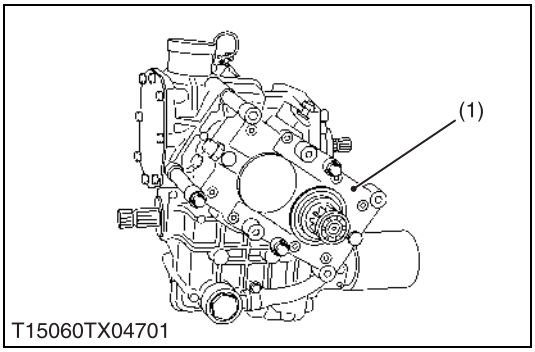


## Hydrostatic Transmission Assembly

1. Remove the hydrostatic transmission assembly (1) from transmission case.

**(When reassembling)**

- Apply oil to the O-rings and take care not to damage them.

| | | |
|---|---|---|
| Tightening torque | Hydrostatic transmission mounting screw | 39.3 to 44.1 N·m<br>4.0 to 4.5 kgf·m<br>28.9 to 32.5 ft-lbs |

(1) Hydrostatic Transmission Assembly

W1017377

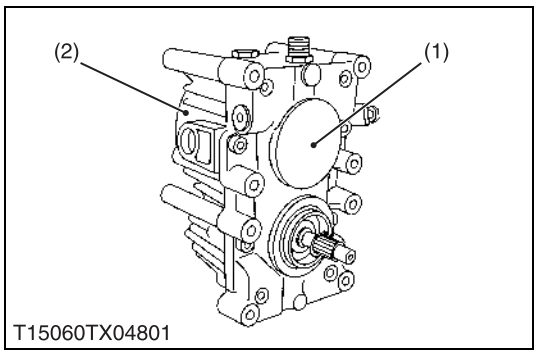

T15060TX04801

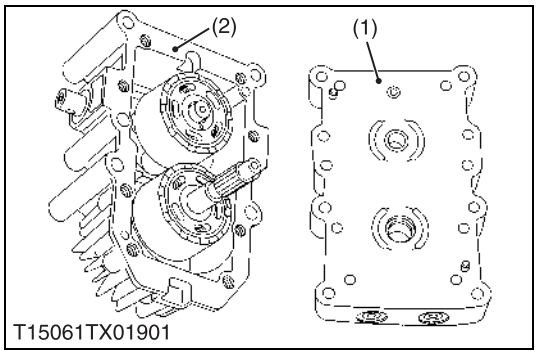

T15061TX01901

## Center Section

1. Remove the center section mounting hex. socket head screws.
2. Tap the center section (1) with soft hammer and separate the center section (1) from the HST housing (2).

**(When reassembling)**

- Cover the splines of each shaft with thin tape to protect the sealing lip of the oil seals.
- Place a new gasket on the HST housing.

■ **NOTE**

- **Take care not to damage the surface of cylinder blocks, pistons and center section.**

| | | |
|---|---|---|
| Tightening torque | Center section mounting hex. socket head screw | 17.7 to 20.5 N·m<br>1.8 to 2.1 kgf·m<br>13.1 to 15.1 ft-lbs |

(1) Center Section (2) HST Housing

W1017500

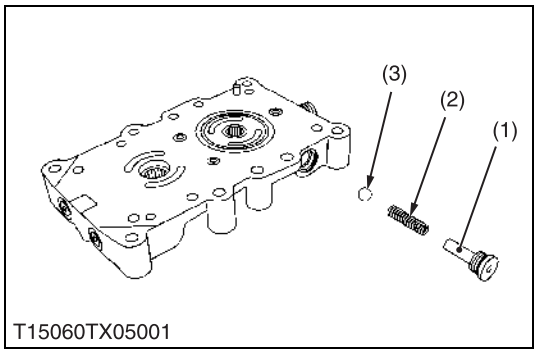

T15060TX05001

## Check Valve [Serial No. Affected: below 20000]

1. Remove the plug (1) and draw out the spring (2) and ball (3).

**(When reassembling)**

- Take care not to damage the O-ring on the plug.

| | | |
|---|---|---|
| Tightening torque | Check valve plug | 24.5 to 34.3 N·m<br>2.5 to 3.5 kgf·m<br>18.1 to 25.3 ft-lbs |

(1) Plug
(2) Spring
(3) Ball

W1017728

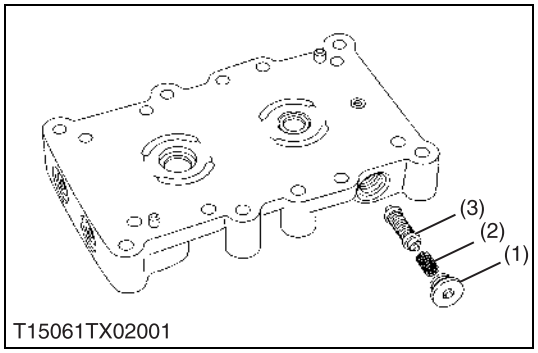

T15061TX02001

## Check and High Pressure Relief Valve Assembly [Serial No. Affected: above 20001]

1. Remove the plug (1) and draw out the spring (2) and check and high pressure relief valve assembly (3).

**(When reassembling)**

- Take care not to damage the O-ring on the plug.

| | | |
|---|---|---|
| Tightening torque | Check and high pressure relief valve plug | 24.5 to 34.3 N·m<br>2.5 to 3.5 kgf·m<br>18.1 to 25.3 ft-lbs |

(1) Plug
(2) Spring
(3) Check and High Pressure Relief Valve Assembly

W1022688

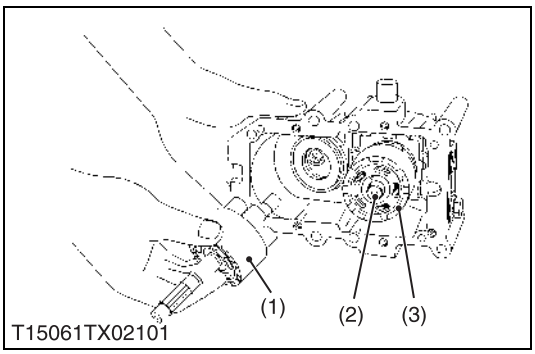

T15061TX02101

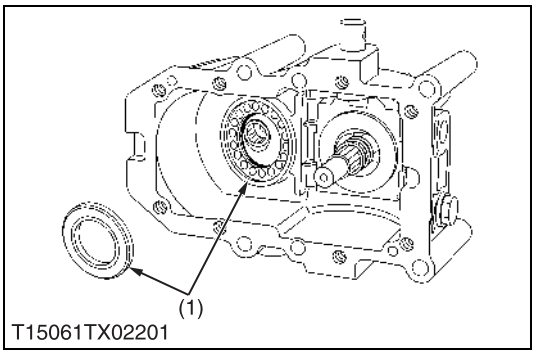

T15061TX02201

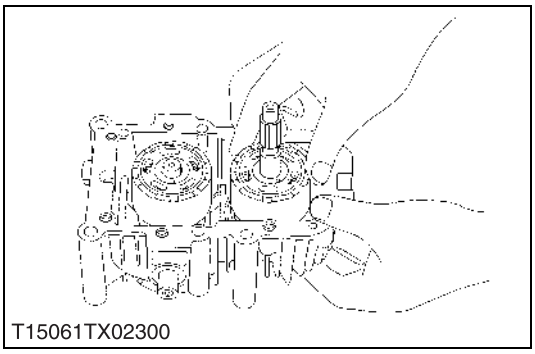
T15061TX02300

## Cylinder Block Assembly and Thrust Ball Bearing

1. Lay the housing on its side.
2. Slide out the cylinder bloke assembly (pump) (1).
3. Slide out the cylinder block assembly (motor) (3) with the motor shaft (2).
4. Remove the thrust ball bearing.

■ **NOTE**

- **Take care not to damage the surface of the cylinder blocks.**

**(When reassembling)**

- Apply clean fluid to the surface of cylinder block.
- After installing the cylinder block assembly, check it to rotate lightly.

(1) Cylinder Block Assembly (pump)
(2) Motor Shaft
(3) Cylinder Block Assembly (motor)
(4) Thrust Ball Bearing

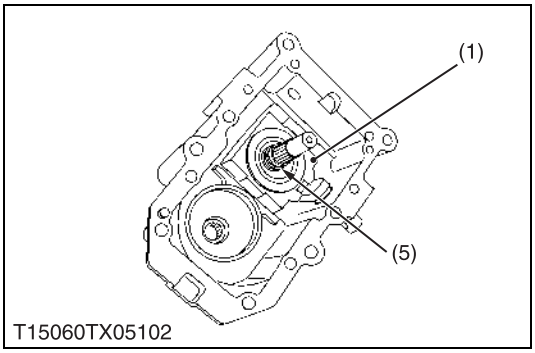

T15060TX05102

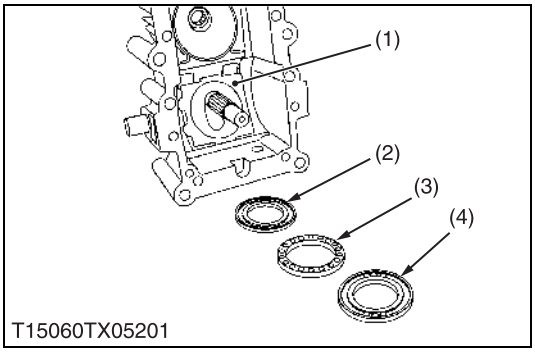

T15060TX05201

## Swashplate

1. Remove the spring (5) and external snap ring.
2. Remove the swashplate (1) from the housing.
3. Remove the thrust plate (4), thrust ball bearing (3) and thrust washer (2) from the swashplate.

**(When reassembling)**

- Apply clean fluid to the thrust washer and thrust plate.

(1) Swashplate
(2) Thrust Washer
(3) Thrust Ball Bearing
(4) Thrust Plate
(5) Spring

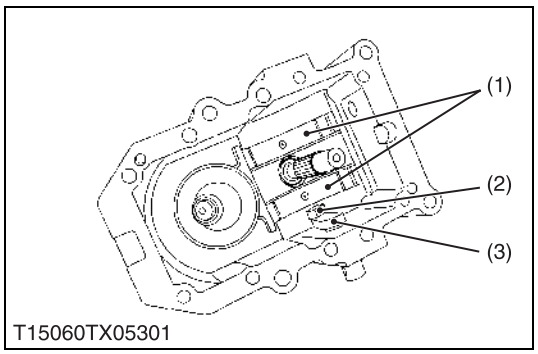

T15060TX05301

## Slot Guide and Cradle Bearing

1. Remove the slot guide (2) from the trunnion arm (3).
2. Remove the cradle bearing (1) from the housing.

(1) Cradle Bearing
(2) Slot Guide
(3) Trunnion Arm

W1031110

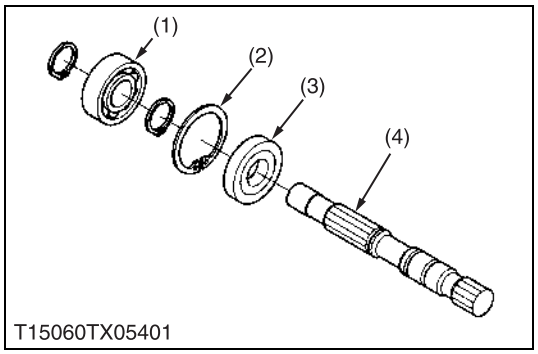

T15060TX05401

## Pump Shaft

1. Remove the oil seal (3) and internal snap ring (2).
2. Tap the pump shaft (4) with a plastic hammer slightly to side out it from the housing with the ball bearing (1).

**(When reassembling)**

- Replace the oil seal with a new one.
- Wrap the pump shaft with a thin plastic or cellophane tape to prevent damage to new seal lip during installation.

(1) Ball Bearing
(2) Internal Snap Ring
(3) Oil Seal
(4) Pump Shaft

W1031231

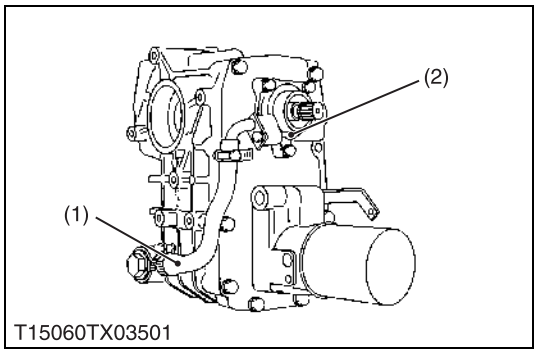

T15060TX03501

## Suction Hose, Hydraulic Pump and Center Cover Assembly

1. Remove the suction hose (1) and hydraulic pump (2).
2. Remove the center cover assembly (3) and separate the PTO clutch assembly (4) from center cover.

**(When reassembling)**

- Take care not to damage the O-rings.

| | | |
|---|---|---|
| Tightening torque | Hydraulic pump mounting screw | 17.7 to 20.5 N·m<br>1.8 to 2.1 kgf·m<br>13.1 to 15.1 ft-lbs |
| | Center cover mounting screw | 39.3 to 44.1 N·m<br>4.0 to 4.5 kgf·m<br>28.9 to 32.5 ft-lbs |

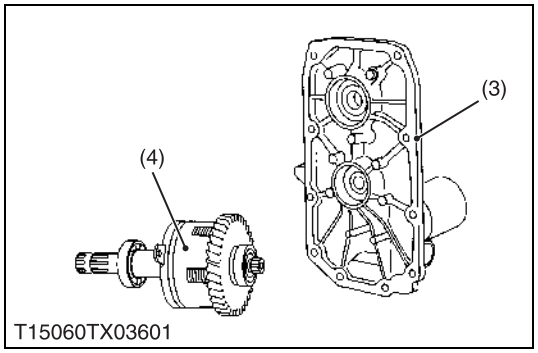

T15060TX03601

(1) Suction Hose
(2) Hydraulic Pump
(3) Center Cover Assembly
(4) PTO Clutch Assembly

W1016333

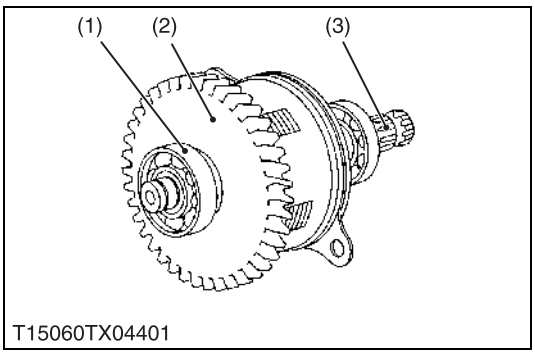

T15060TX04401

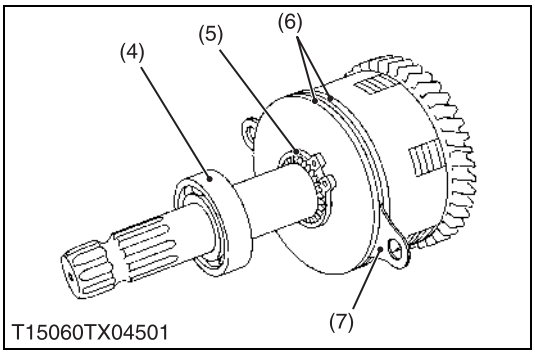

T15060TX04501

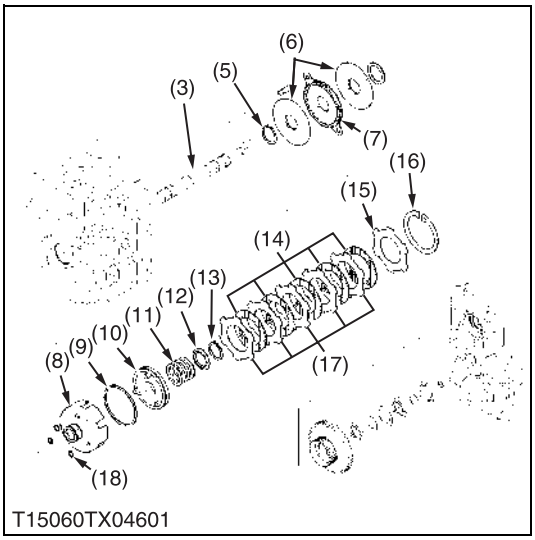

T15060TX04601

## Disassembling PTO Clutch Assembly

1. Remove the bearing (1) and clutch gear (2).
2. Tap out the PTO clutch shaft (3) from clutch case (8).
3. Remove the internal snap ring (16), then remove the pressure plate (15), clutch disc and clutch plate (17).
4. Remove the external snap ring (13), spring collar (12) and clutch spring (11).
5. Remove the bearing (4) and external snap ring (5), then remove the brake plate (6) and brake disc (7).
6. Tap out the behind of piston (10) from clutch case (8).

**(When reassembling)**

- Apply transmission oil to the O-rings (18), D-ring (9) and seal rings, and take care not to damage it.

(1) Bearing
(2) Clutch Gear
(3) PTO Clutch Shaft
(4) Bearing
(5) External Snap Ring
(6) Brake Plate
(7) Brake Disc
(8) Clutch Case
(9) D-ring
(10) Piston
(11) Clutch Spring
(12) Spring Collar
(13) External Snap Ring
(14) Clutch Disc
(15) Pressure Plate
(16) Internal Snap Ring
(17) Clutch Plate
(18) O-ring

W1017183

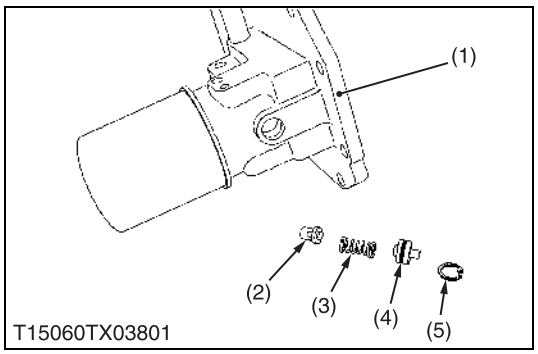


## Regulator Valve

1. Remove the internal snap ring (5), plug (4), spring (3) and poppet (2).

**(When reassembling)**

- Take care not to damage the O-rings.

(1) Center Cover Assembly
(2) Poppet
(3) Spring
(4) Plug
(5) Internal Snap Ring

W1016607

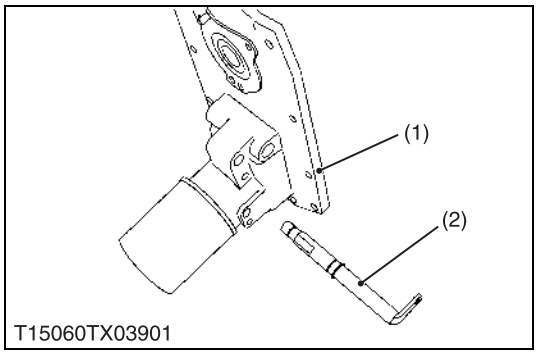


## PTO Clutch Lever

1. Remove the external snap ring and PTO clutch lever (2).

**(When reassembling)**

- Take care not to damage the O-rings.

(1) Center Cover Assembly
(2) PTO Clutch Lever

W1016683

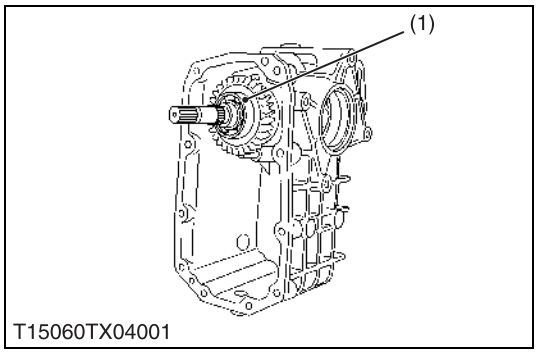


## Input Shaft and Bevel Gears

1. Remove the internal snap ring and 19T bevel gear with bearing.
2. Remove the internal snap ring and joint shaft with bearing.
3. Remove the 16T bevel gear and input shaft assembly (1).

**(When reassembling)**

■ **IMPORTANT**

- **Adjust the backlash and the tooth contact after assembling the 19T and 16T bevel gears (ZD18(F) · ZD21(F)) or the 19T and 18T bevel gears (ZD28(F)).**

(1) Input Shaft Assembly

W1016759

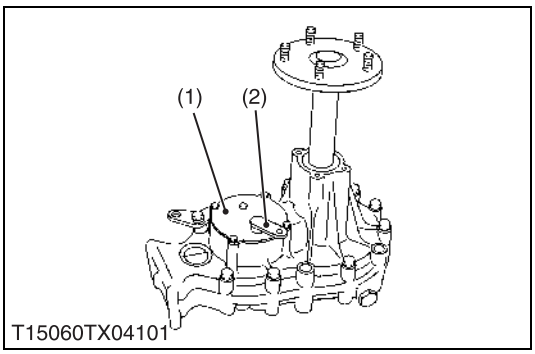

T15060TX04101

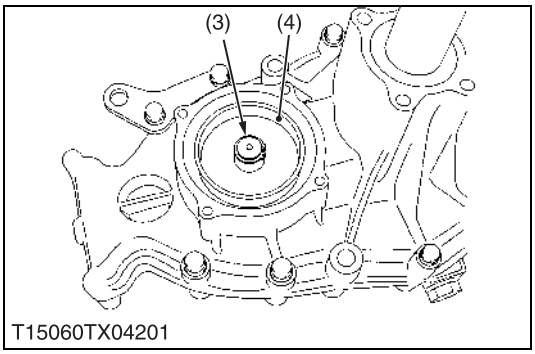

T15060TX04201

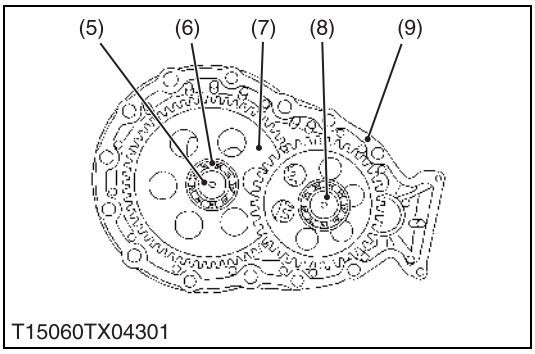

T15060TX04301

## Brake Shaft and Rear Axle

1. Remove the brake cover assembly (1).
2. Remove the external snap ring (3) and brake drum (4).
3. Remove the ball bearing (6).
4. Remove the 57T gear (7) and brake shaft (8).
5. Remove the rear axle (5) from the rear axle case (9).

**(When reassembling)**

- When the brake cover is assembled, the brake cover keeps the same as the pull of the brake lever (2) and making the brake and is assembled. (The brake shoes are prevented being biased.)

(1) Brake Cover Assembly
(2) Brake Lever
(3) External Snap Ring
(4) Brake Drum
(5) Rear Axle
(6) Ball Bearing
(7) 57T Gear
(8) Brake Shaft
(9) Rear Axle Case

W1017039

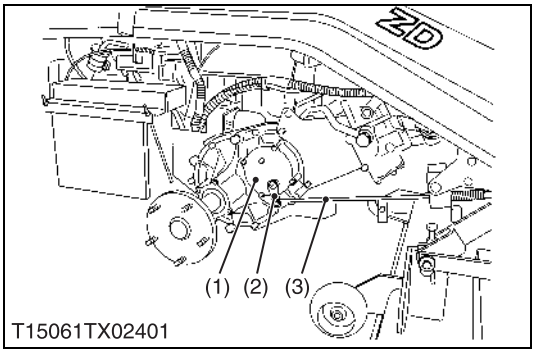

T15061TX02401

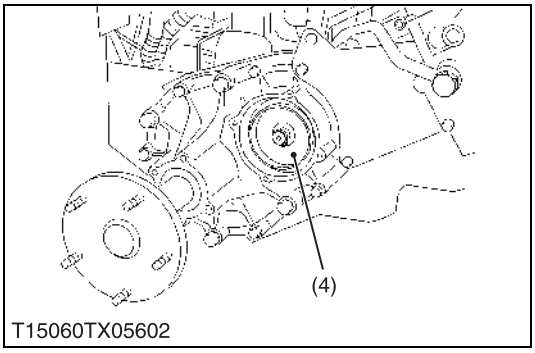

T15060TX05602

## Disassembling Parking Brake

1. Lift the rear of the machine so that the rear wheel is off the ground, and chock the rear wheel.
2. Remove the rear wheel and brake rod (3).
3. Remove the brake cover (1) with brake shoes.
4. Remove the external snap ring and brake drum (4).
5. Inspect all parts for wear or damage. Replace the parts as needed.

**(When reassembling)**

- When the brake cover is assembled, the brake cover keeps the same as the pull of the brake lever (2) and making the brake and is assembled. (The brake shoes are prevented being biased.)

■ **NOTE**

- **After assembling the brake assembly, be sure check the parking brake spring length and play. If the measurement is not within the factory specifications, adjust the spring length and play. (See page G-28.)**

(1) Brake Cover
(2) Brake Lever
(3) Brake Rod
(4) Brake Drum

W1018520

# 6. SERVICING

## [1] HYDROSTATIC TRANSMISSION

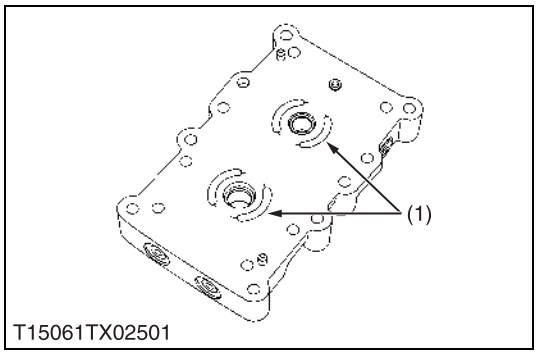

T15061TX02501

**Center Section**

1. Check the surface (1) of center section for scratches or wear. If deep scratch or excessive wear is found, replace the hydrostatic transmission assembly.

(1) Surface

W1018716

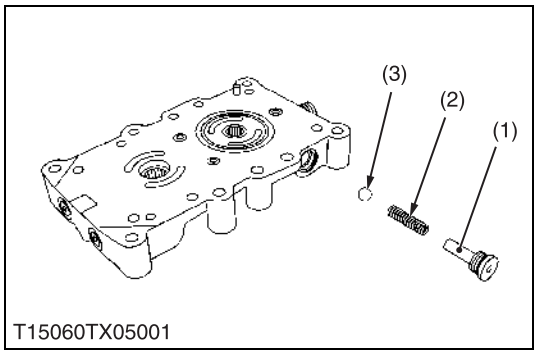

T15060TX05001

**Check and High Pressure Relief Valve**

**[Serial No. Affected: below 20000]**

1. Check the ball (3) for scratches and damage.
2. Check the spring (2) for breakage and wear.
3. If anything unusual, replace the ball and spring.

(1) Plug
(2) Spring
(3) Ball

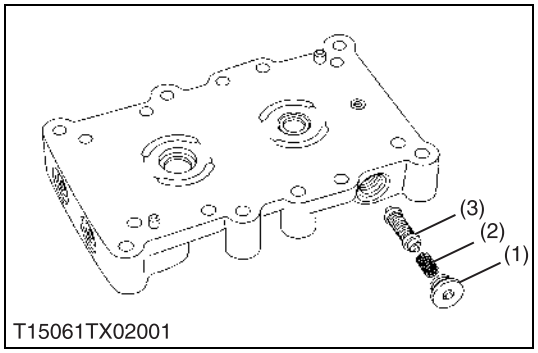

T15061TX02001

**Check and High Pressure Relief Valve**

**[Serial No. Affected: above 20001]**

1. Check the check and high pressure relief valve assembly (3) for scratches and damage.
2. Check the spring (2) for breakage and wear.
3. If anything unusual, replace the ball and spring.

(1) Plug
(2) Spring
(3) Check and High Pressure Relief Valve Assembly

W1018786

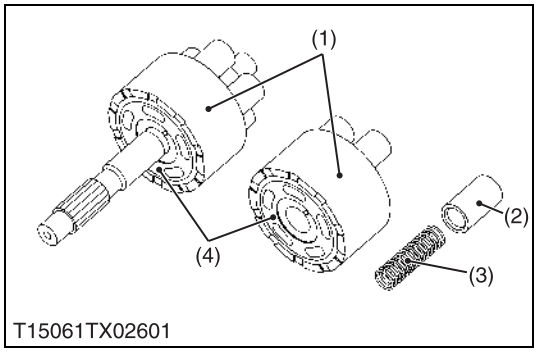

T15061TX02601

**Cylinder Block Assembly**

1. Check the cylinder blocks (1) and pistons (2) for scratches and wear.
2. If scratch or worn, replace the cylinder block assembly.
3. Check that the piston (2), spring (3) are in each cylinder bore.
4. Check the pistons for their free movement in the cylinder block bores.
5. If the piston or the cylinder block is scored, replace the cylinder block assembly.
6. Check the polished face (4) of cylinder block for scoring.
7. If scored, replace the cylinder block assembly.

■ **IMPORTANT**

- **Do not interchange pistons between pump and motor cylinder block. Pistons and cylinder blocks are matched.**

(1) Cylinder Block
(2) Piston
(3) Spring
(4) Polished Face

W1018898

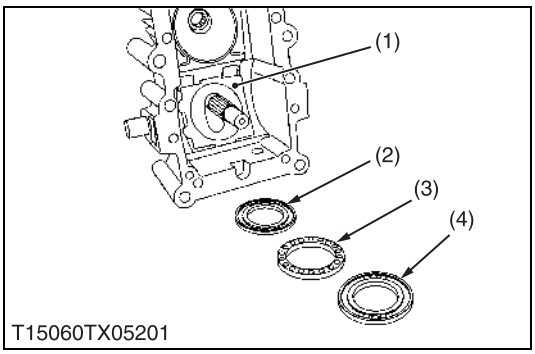


**Thrust Washer, Thrust Ball Bearing and Thrust Plate**

1. Check the thrust ball bearing (3) for scratches and excessive wear.
2. If worn, replace.
3. Check the thrust plate (4) for scratches and excessive wear.
4. If worn or scored, replace.

(1) Swash Plate
(2) Thrust Washer
(3) Thrust Ball Bearing
(4) Thrust Plate

W1019059

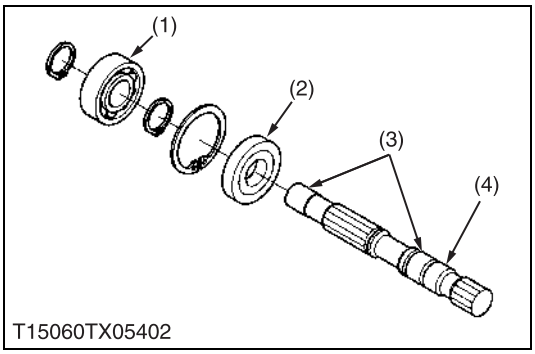


**Pump Shaft**

1. Check the seal surface (4), the bearing surface (3) and the ball bearing (1).
2. If the shaft is rough or grooved, replace it.
3. If the ball bearing is worn, replace it.

(1) Ball Bearing
(2) Oil Seal
(3) Bearing Surface
(4) Seal Surface

W1019162

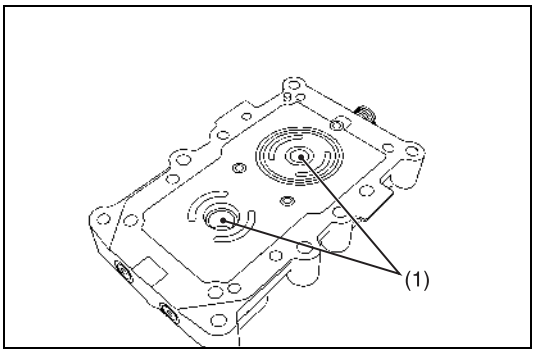


**Needle Bearing and Oil Seal**

1. Check the oil seals for damage.
2. Check the needle bearings (1) for wear.
3. If the oil seal and needle bearings are worn or damaged, replace them.

(1) Needle Bearing

W1019539

# [2] TRANSMISSION CASE

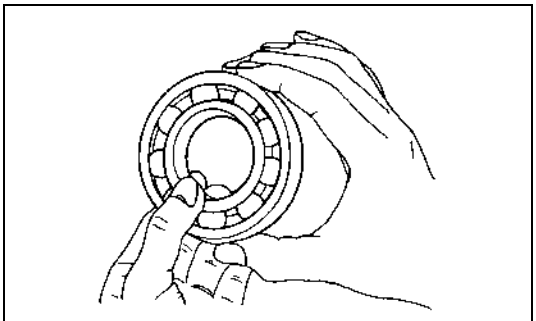
T12630BS03100

**Checking Bearing**

1. Hold the inner race, and push and pull the outer race in all directions to check for wear and roughness.
2. Apply transmission fluid to the bearing, and hold the inner race. Then, turn the outer race to check rotation.
3. If there is any defect, replace it.

W1019648

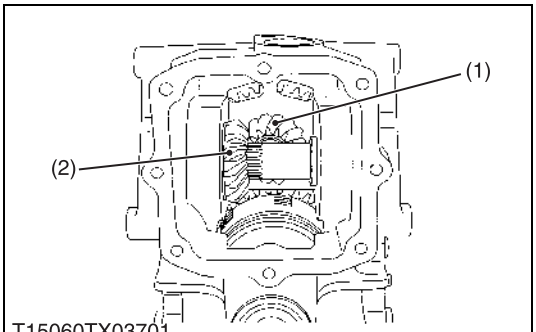

T15060TX03701

**Backlash and Tooth Contact between 19T Bevel Gear and 16T or 18T Bevel Gear**

1. Measure the backlash between the 19T bevel gear (2) and 16T or 18T bevel gear (1).
2. When the backlash is too large, decrease the number of shims in the side of the spiral bevel gear, and insert the removed shims in the opposite side. When the backlash is too small, decrease the number of shims in the side of the differential case, and insert the removed shims in the opposite side.
3. Adjust the backlash properly by repeating the above procedure.
4. Apply red lead lightly over several teeth at three positions equally spaced on the hypoid ring gear.
5. Turn the 16T or 18T bevel gear by input shaft while pressing a wooden piece against the periphery of the bevel gear.
6. Check the tooth contact, if not proper, adjust according to the following instruction.

| | | |
|---|---|---|
| Backlash between 16T or 18T bevel gear and 19T bevel gear | Factory spec. | 0.20 to 0.30 mm<br>0.0078 to 0.0118 in. |
| Tooth contact | Factory spec. | More than 25 % red lead contact area on the gear tooth surface |
| The position of tooth contact point | Factory spec. | the center of tooth contact at 3/10 of the entire width from the small end |

(1) 16T or 18T Bevel Gear (2) 19T Bevel Gear

W1028399

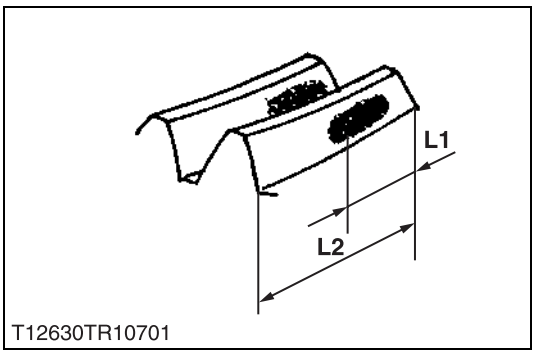

T12630TR10701

## Correcting of Tooth Contact

1. Proper contact.
- No adjustment.

W1028600

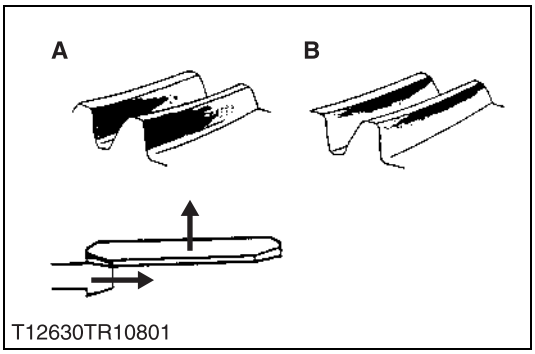

T12630TR10801

2. Correcting of the heel contact and shallow contact.
- It is confirmed whether there is a shim (3).
- The 16T or 18T bevel gear (5) can be moved to backward by doing to add the shim (3) when not is. (The shim is made the state as it is when there is a shim (3).)
- And place the 19T bevel gear (2) side shim to the shim (4) to move the 19T bevel gear outside.
- Repeat above until the proper tooth contact and backlash are achieved.

W1028716

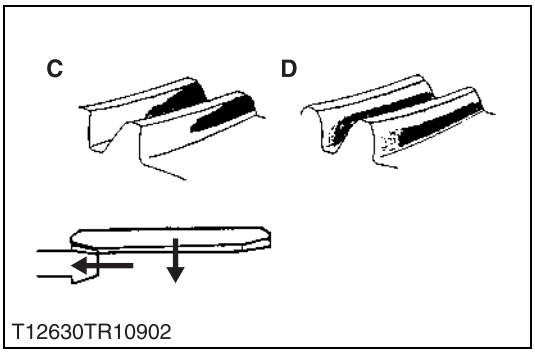

T12630TR10902

3. Correcting of the toe contact and deep contact.
- It is confirmed whether there is a shim (3).
- The 16T or 18T bevel gear (5) can be moved to forward by removing the shim (3) if there is a shim. (The shim (3) is not put when there is no shim.)
- And place the shim (4) side to the 19T bevel gear (2) side shim to move the 19T bevel gear inside.
- Repeat above until the proper tooth contact and backlash are achieved.

(1) Shim
(2) 19T Bevel Gear
(3) Shim
(4) Shim
(5) 16T or 18T Bevel Gear

W1028812

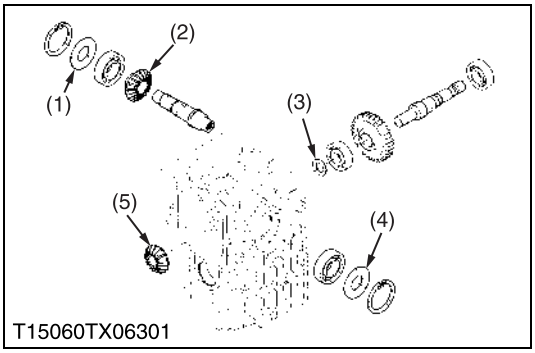

T15060TX06301

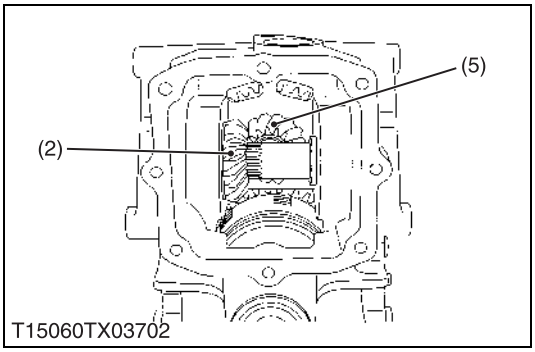

T15060TX03702

# 3 FRONT AXLE

# MECHANISM

## CONTENTS

# 1. STRUCTURE

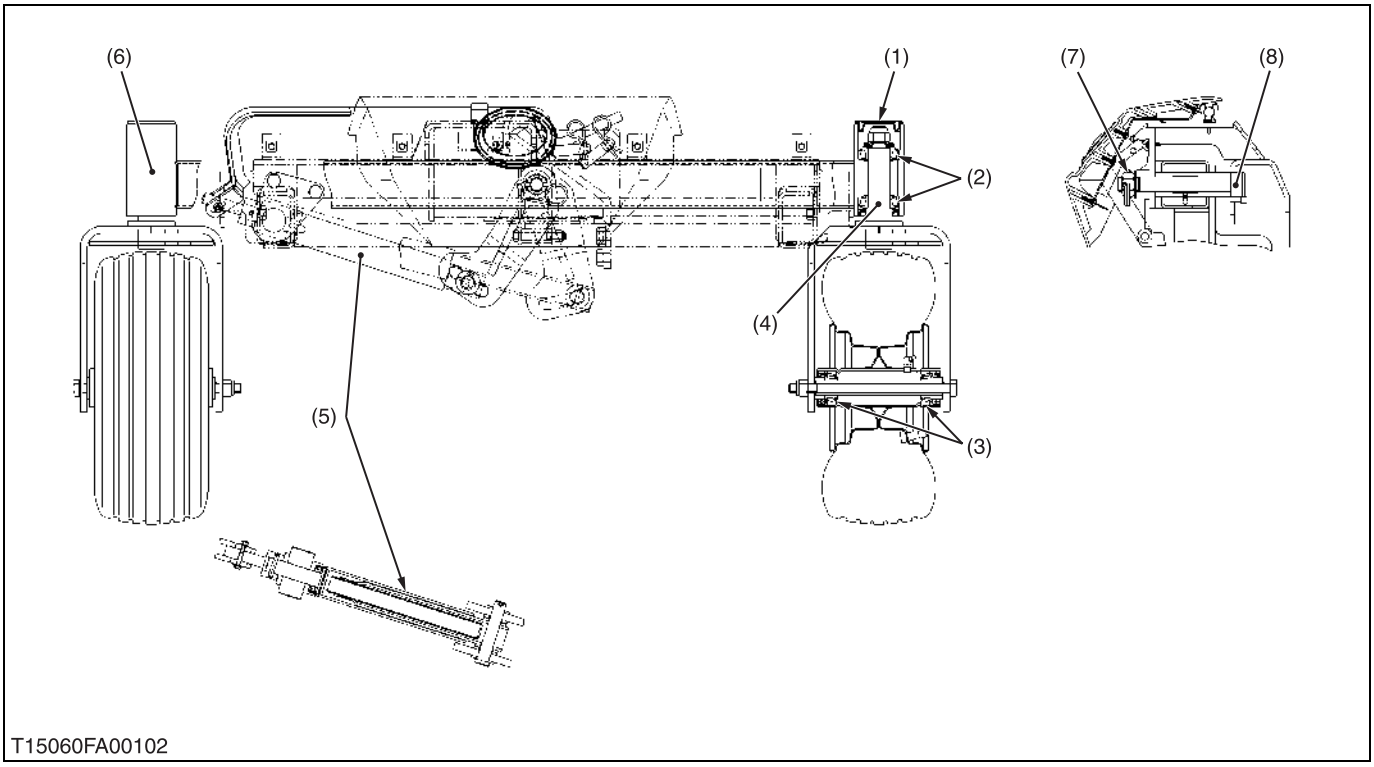


(1) Cap
(2) Taper Roller Bearing
(3) Taper Roller Bearing
(4) Wheel Bracket
(5) Lift Up Adjuster
(6) Front Axle
(7) Slotted Nut
(8) Center Pin

The front axle is constructed as shown above. The shape of the front axle is relatively simple, and the front axle is supported at its center with the center pin (8), so that steering operation is stable even on uneven grounds in a grass field.

# SERVICING

## CONTENTS

# 1. TROUBLESHOOTING

| Symptom | Probable Cause | Solution | Reference Page |
|---|---|---|---|
| **Front Wheels Wander to Right or Left** | • Clearance between center pin and front axle excessive | Replace | – |
| | • Force of the lock nut which tighten the wheel bracket has become down. | Adjust | 3-S5 |
| | • Clearance between front axle and front axle support excessive | Adjust | 3-S4 |

W1014322

# 2. SERVICING SPECIFICATIONS

| Item | | Factory Specification | Allowable Limit |
|---|---|---|---|
| Front Axle End Play | Clearance | 0 to 0.2 mm<br>0 to 0.008 in. | 0.5 mm<br>0.02 in. |

W1013874

# 3. TIGHTENING TORQUES

Tightening torques of screws, bolts and nuts on the table below are especially specified.
(For general use screws, bolts and nuts: See page G-8.)

| Item | N·m | kgf·m | ft-lbs |
|---|---|---|---|
| Wheel bolt and lock nut | 20 to 25 | 2.04 to 2.55 | 14.75 to 18.44 |
| Wheel bracket lock nut | 45 to 55 | 4.59 to 5.61 | 33.19 to 40.57 |
| Center pin lock nut (Slotted nut) | 40 to 80 | 4.08 to 8.16 | 29.50 to 59.00 |

W1012736

# 4. CHECKING, DISASSEMBLING AND SERVICING

## [1] CHECKING AND ADJUSTING

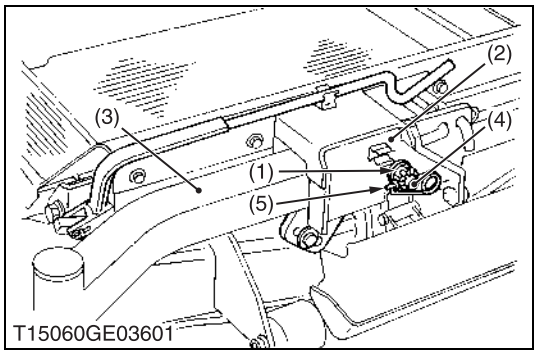

T15060GE03601

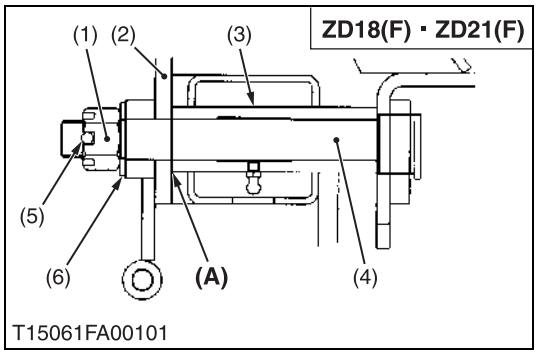

T15061FA00101

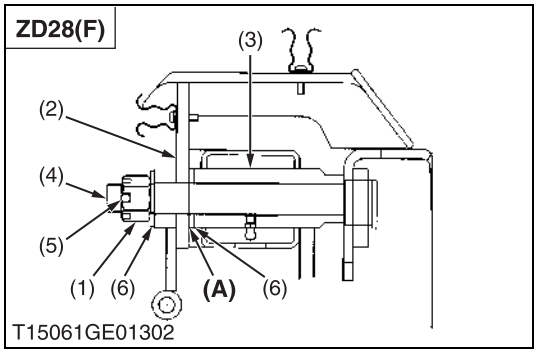

T15061GE01302

**Adjusting Front Axle Pivot**

1. Lift up and securely block the front of the machine.
2. Measure the clearance **(A)** between the front axle (3) and front axle support (2).
3. If the measurement exceeds the allowable limit, remove the set spring (5) and adjust the end play by slotted nut (1).

**(When reassembling)**

| | | |
|---|---|---|
| Tightening torque | Center pin lock nut (Slotted nut) | 40 to 80 N·m<br>4.08 to 8.16 kgf·m<br>29.50 to 59.00 ft-lbs |

■ **NOTE**

- **When fastening the center pin (4), tighten the nut (1) so that the front axle may be oscillated smoothly by hand.**

| | | |
|---|---|---|
| Front axle end play **(A)** | Factory spec. | 0 to 0.2 mm<br>0 to 0.008 in. |
| | Allowable limit | 0.5 mm<br>0.02 in. |

(1) Slotted Nut
(2) Front Axle Support
(3) Front Axle
(4) Center Pin
(5) Set Spring
(6) Plain Washer

**(A) Front Axle End Play**

W1011206

# [2] DISASSEMBLING AND ASSEMBLING

## (1) Separating Front Wheel and Wheel Bracket

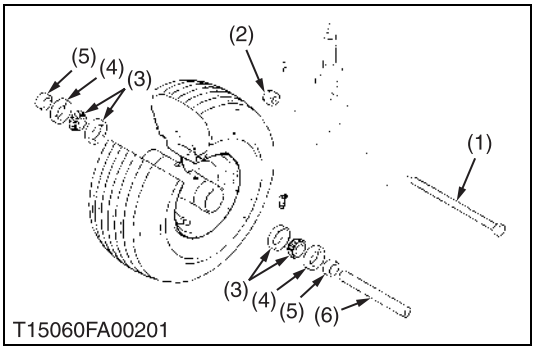

T15060FA00201

**Remove the Front Wheel**

1. Inspect all parts for wear or damage. Replace the parts as needed.

**(When reassembling)**

- Apply grease to grease fittings. (See page G-7.)

| | | |
|---|---|---|
| Tightening torque | Front wheel mounting bolt and locking nut | 20 to 25 N·m<br>2.04 to 2.55 kgf·m<br>14.75 to 18.44 ft-lbs |

(1) Bolt
(2) Locking Nut
(3) Taper Roller Bearing
(4) Oil Seal
(5) Spacer
(6) Sleeve

W1011397

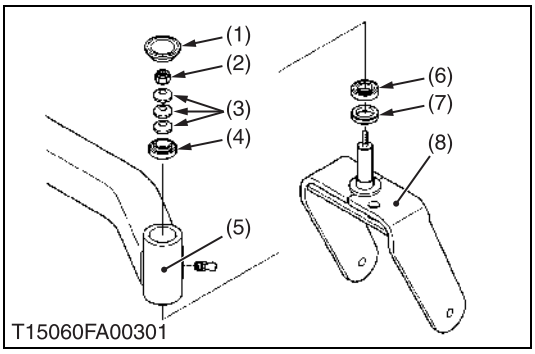

T15060FA00301

**Remove the Wheel Bracket**

1. Remove the cap (1).
2. Remove the locking nut (2) and wheel bracket (8).
3. Inspect all parts for wear or damage. Replace the parts as needed.

**(When reassembling)**

- Do not mistake the direction when reassembling the plate spring (3), taper roller bearing (4), (6) and oil seal (7).

| | | |
|---|---|---|
| Tightening torque | Locking nut tightening torque | 45 to 55 N·m<br>4.59 to 5.61 kgf·m<br>33.19 to 40.57 ft-lbs |

(1) Cap
(2) Locking Nut
(3) Plate Spring
(4) Taper Roller Bearing
(5) Front Axle
(6) Taper Roller Bearing
(7) Oil Seal
(8) Bracket

W1011557

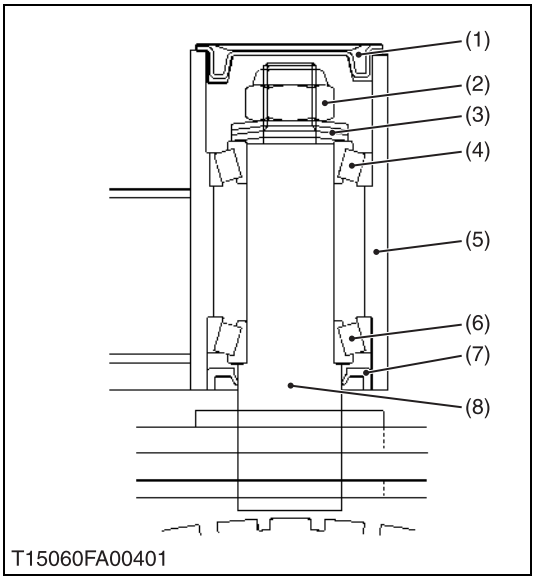

T15060FA00401

# 4 HYDRAULIC SYSTEM

# MECHANISM

## CONTENTS

# 1. HYDRAULIC CIRCUIT

**[Serial No. Affected: below 20000]**

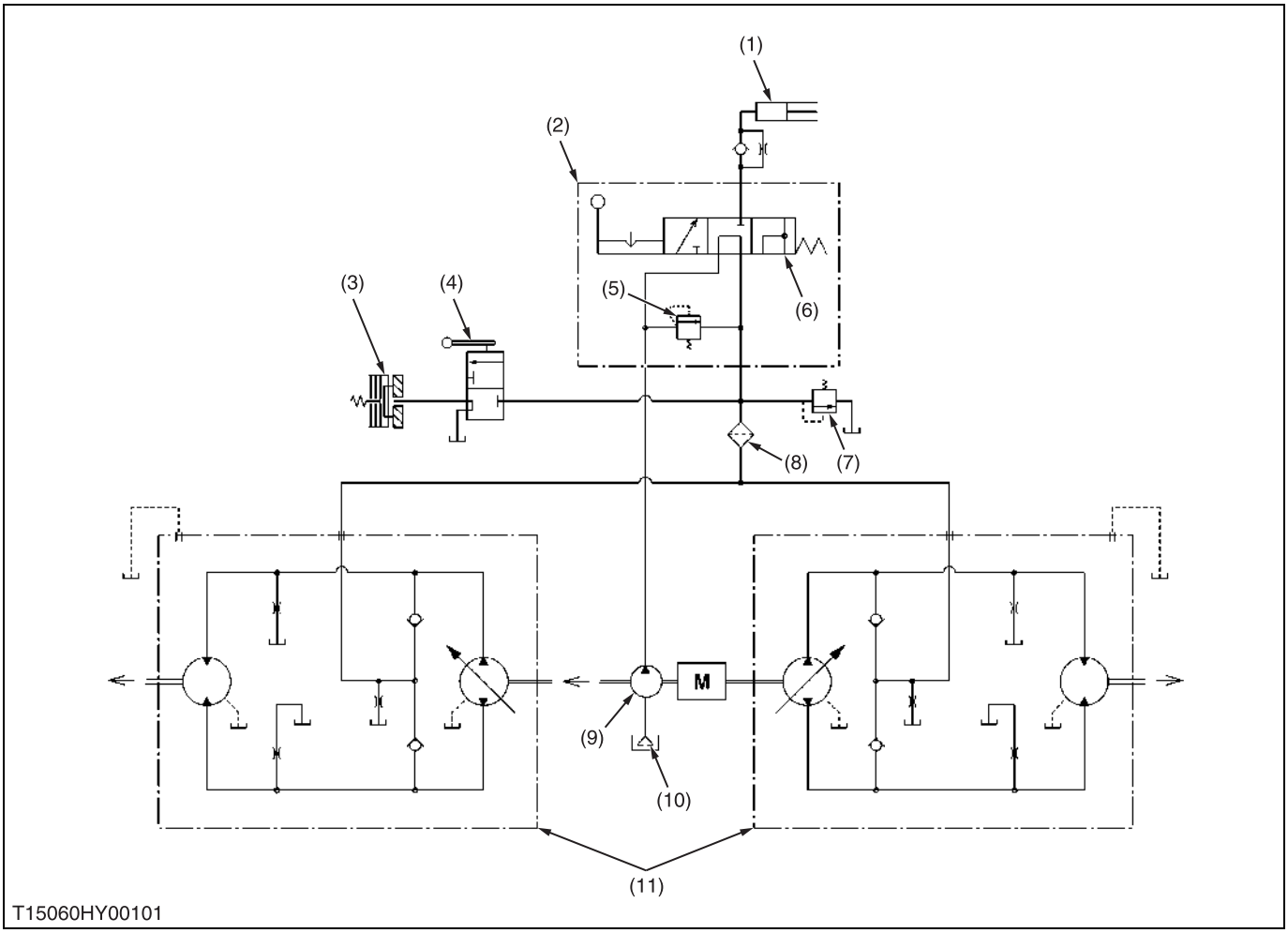


(1) Hydraulic Cylinder
(2) Hydraulic Control Valve Assembly
(3) PTO Clutch
(4) PTO Clutch Valve
(5) Relief Valve
(6) Control Valve
(7) Regulator Valve
(8) Oil Filter
(9) Hydraulic Pump
(10) Oil Strainer
(11) Hydrostatic Transmission

The hydraulic system of this machine is composed of a hydraulic pump (9), control valve (6), hydraulic cylinder (1) and other components.

This system has the following functions.

Oil is supplied by hydraulic pump (9) which is driven by engine.

Power from the input shaft (pump shaft) is distributed right and left with the bevel gears and drives each hydrostatic transmission (9).

Moreover, oil from the hydraulic pump (9) is sent to the transmission center case through the control valve. On the other hand, oil is regulated with the regulator valve (7) to constant pressure and sent to the hydrostatic transmission (11) and PTO clutch (3).

**[Serial No. Affected: above 20001]**

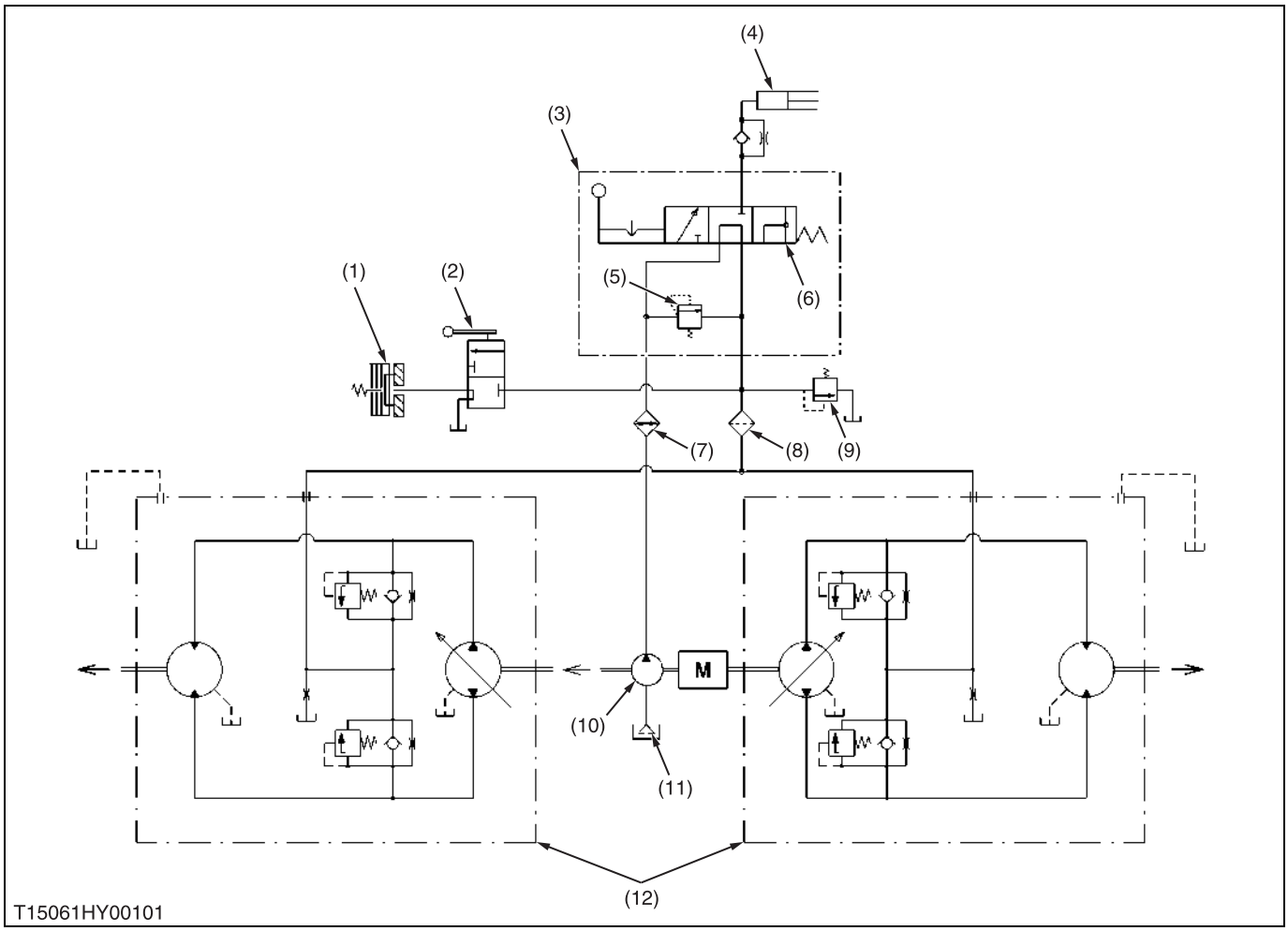


(1) PTO Clutch
(2) PTO Clutch Valve
(3) Hydraulic Control Valve Assembly
(4) Hydraulic Cylinder
(5) Relief Valve
(6) Control Valve
(7) Oil Cooler (ZD28 · ZD28(F))
(8) Oil Filter
(9) Regulator Valve
(10) Hydraulic Pump
(11) Oil Strainer
(12) Hydrostatic Transmission

The hydraulic system of this machine is composed of a hydraulic pump (10), control valve (6), hydraulic cylinder (4) and other components.

This system has the following functions.

Oil is supplied by hydraulic pump (10) which is driven by engine.

Power from the input shaft (pump shaft) is distributed right and left with the bevel gears and drives each hydrostatic transmission (12).

Moreover, oil from the hydraulic pump (10) is sent to the transmission center case through the control valve. On the other hand, oil is regulated with the regulator valve (9) to constant pressure and sent to the hydrostatic transmission (12) and PTO clutch (1).

# 2. HYDRAULIC PUMP

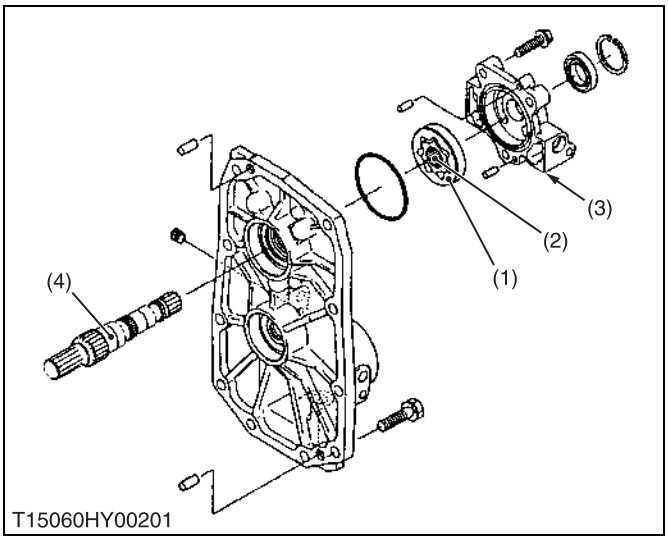


The oil pump in this engine is a trochoid pump.

Inside the pump body, the 6 lobe inner rotor (2) is eccentrically engaged with the 7 lobe outer rotor (1). The inner rotor is driven by the input shaft, which in turn rotate the outer rotor.

(1) Outer Rotor
(2) Inner Rotor
(3) Pump Case
(4) Input Shaft

W1012820

# 3. HYDRAULIC CONTROL VALVE AND VALVE ADAPTOR

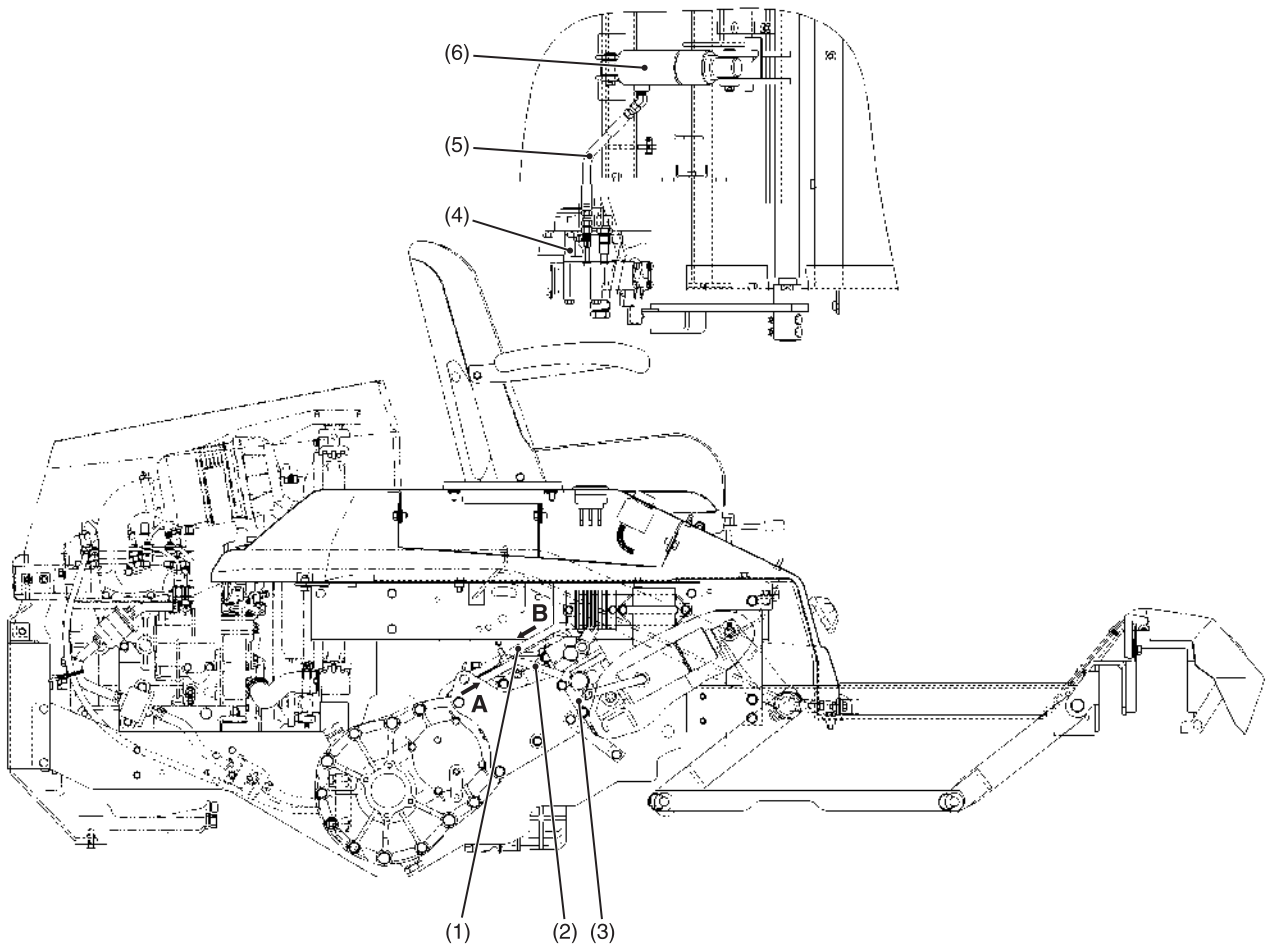


T15060HY00301

| | | | |
|---|---|---|---|
| (1) Return Pipe | (3) Control Valve | (5) Cylinder Hose | **A: From Hydraulic Pump** |
| (2) Delivery Pipe | (4) Control Valve Adaptor | (6) Lift Cylinder | **B: To Transmission Case** |

The hydraulic system consists of the control valve (3), control valve adaptor (4), lift cylinder (6) and etc..

Filtered oil is forced out by the hydraulic pump to the control valve (3) through the delivery pipe (2).

The control valve switches the oil flow, and oil is channeled to the lift cylinder (6) or returned to the transmission case (hydrostatic transmission charge line) through the return pipe.

## ■ Neutral

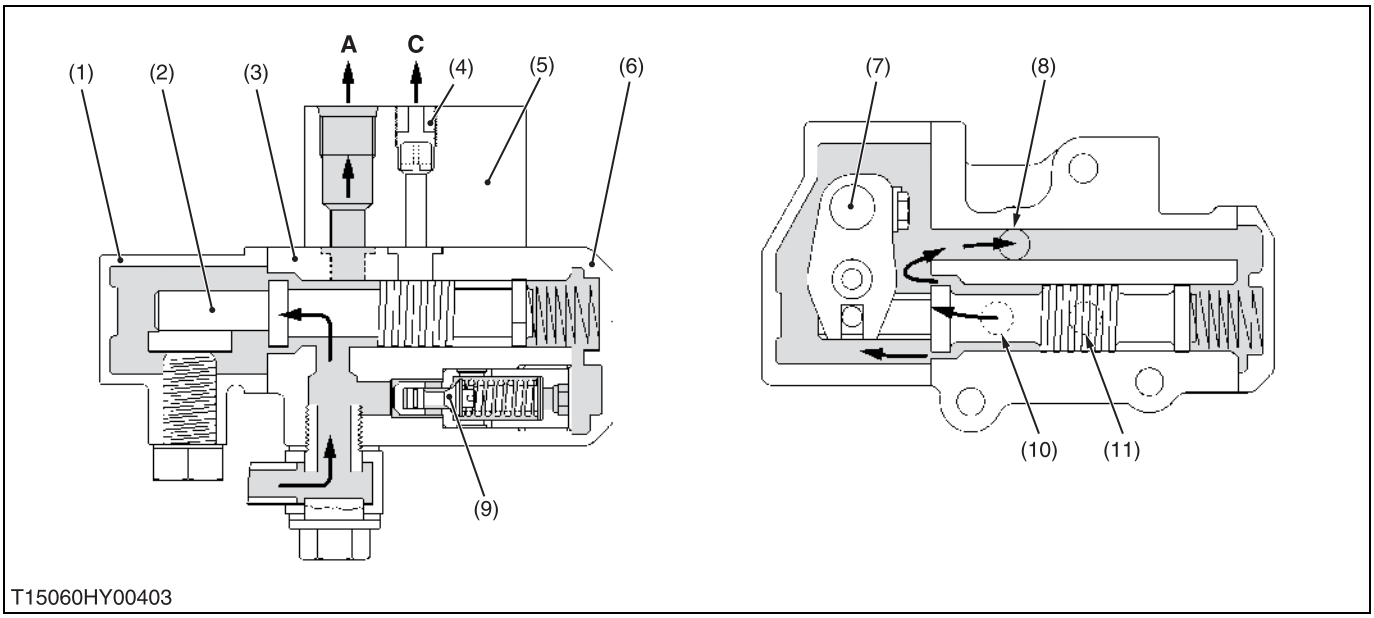


(1) Valve Cover
(2) Spool
(3) Valve Body
(4) Orifice
(5) Control Valve Adaptor
(6) Relief Cover
(7) Control Lever
(8) R(Return) Port
(9) Relief Valve
(10) **P** (Pump) Port
(11) **C** (Cylinder) Port

**A: To Hydrostatic Transmission**
**C: To Lift Cylinder**

Oil, pressure-fed from the hydraulic pump, goes to the valve cover (1) chamber through the clearance between the valve body (3) and spool (2), and flows to the hydrostatic transmission through the **R** port (8) and control valve adaptor (5).

**C** port (11) is closed by the spool (2) and the valve body (3) to prevent oil from flowing out of the lift cylinder. For this reason, the mower maintains its position.

## ■ Lift

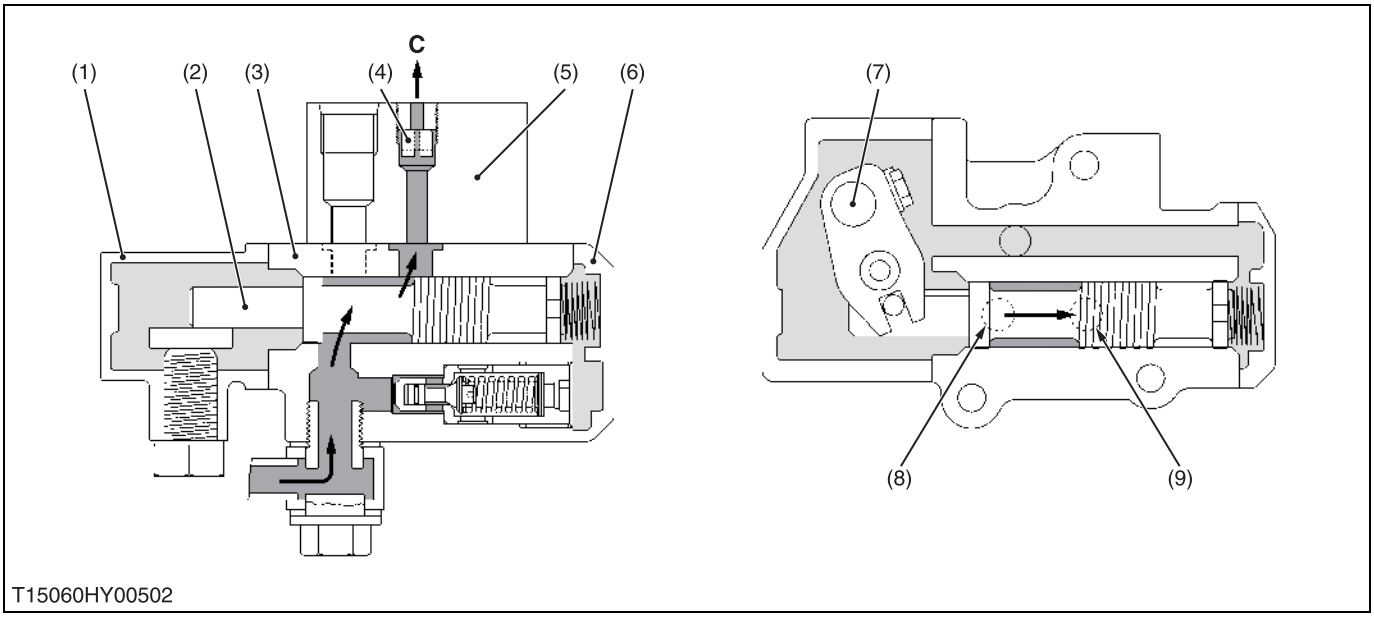


(1) Valve Cover
(2) Spool
(3) Valve Body
(4) Orifice
(5) Control Valve Adaptor
(6) Relief Cover
(7) Control Lever
(8) **P** (Pump) Port
(9) **C** (Cylinder) Port

**C: To Lift Cylinder**

When the control lever (7) is set to **"LIFT"** position, the spool (2) moves to the right to form a lifting circuit.

Pressure-fed oil goes through the clearance between the valve body (3) and spool (2), and is fed to the lift cylinder to lift the mower through the **C** port (9) and control valve adaptor (5) with orifice (4).

## ■ Overloaded

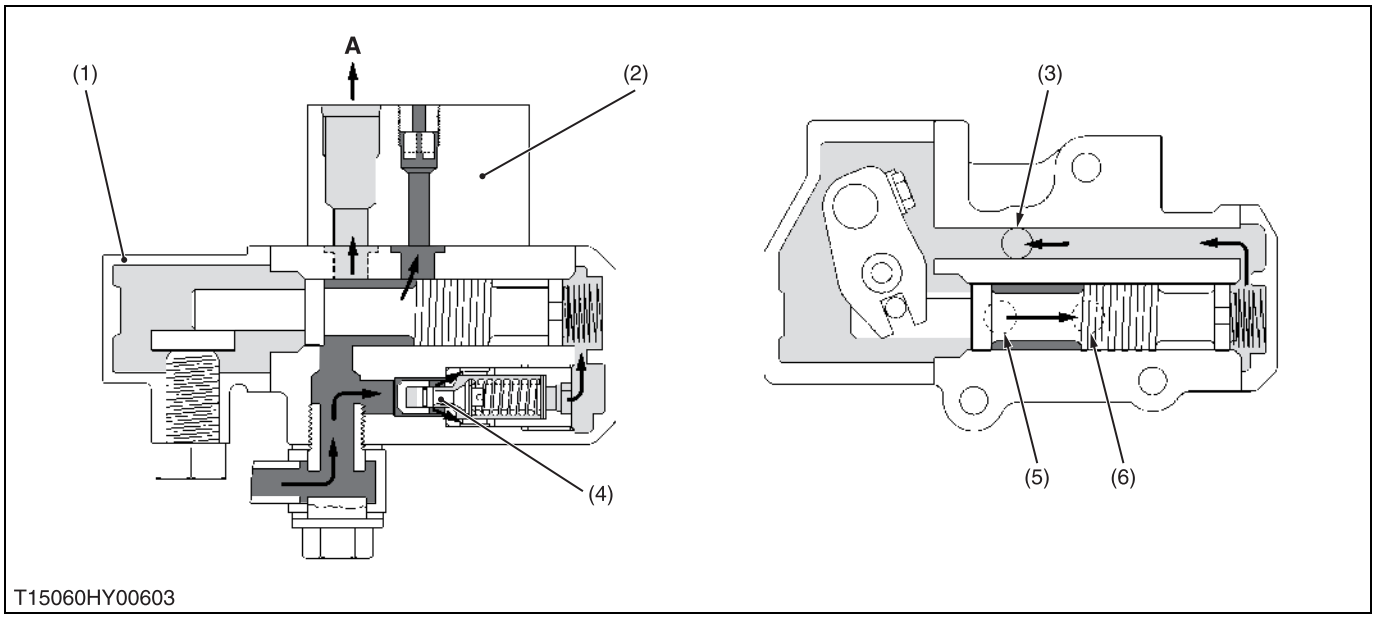


(1) Spool
(2) Control Valve Adaptor
(3) **R** (Return) Port
(4) Relief Valve
(5) **P** (Pump) Port
(6) **C** (Cylinder) Port
**A: To Hydrostatic Transmission**

If the pressure in the circuit exceeds the relief valve setting pressure (3.14 to 3.73 MPa, 32 to 38 kgf/cm$^2$, 455 to 540 psi), the relief valve (4) opens to release pressure-fed oil.

Then, oil flows to the hydrostatic transmission through the **R** port (3) and control valve adaptor (2) as shown in the figure.

## ■ Down

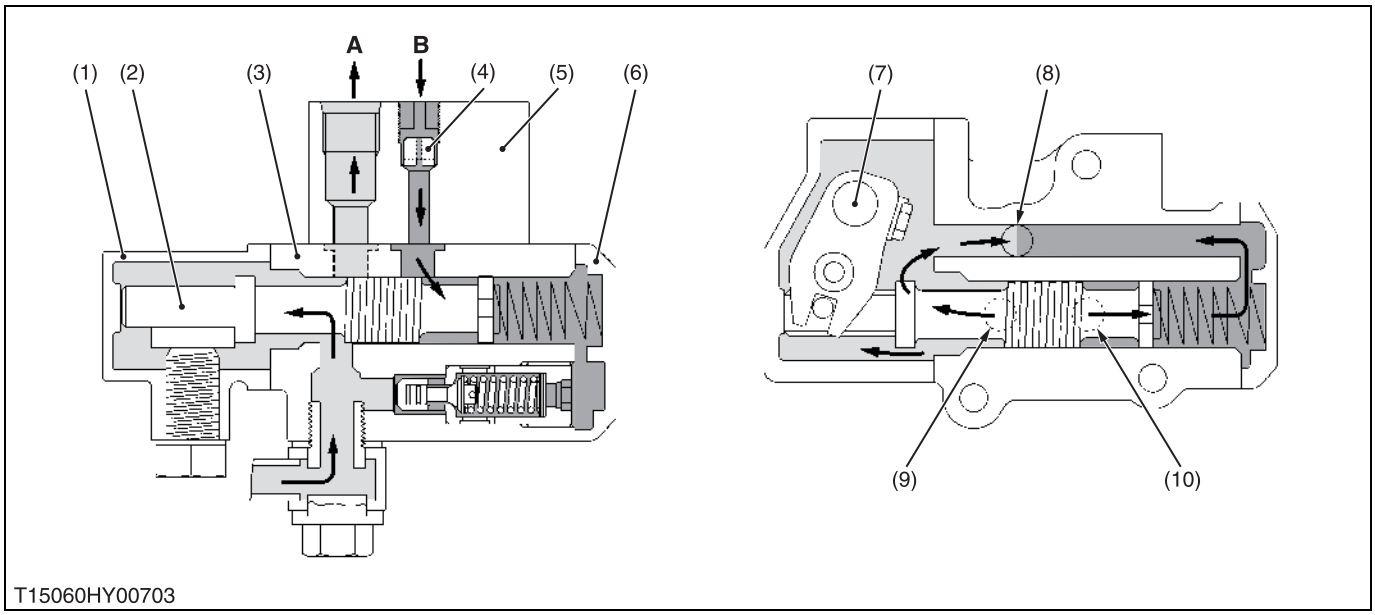


(1) Valve Cover
(2) Spool
(3) Valve Body
(4) Orifice
(5) Control Valve Adaptor
(6) Relief Cover
(7) Control Lever
(8) **R** (Return) Port
(9) **P** (Pump) Port
(10) **C** (Cylinder) Port
**A: To Hydrostatic Transmission**
**B: From Lift Cylinder**

When the control lever (7) is set to **"DOWN"** position, the spool (2) moves to the left to form a lowering circuit. Therefore, oil in the lift cylinder is forced out by the weight of the mower and returns to the hydrostatic transmission to lower the mower as shown in the figure.

Oil, pressure-fed from the hydraulic pump, goes through the clearance between the valve body (3) and spool (2), and then flows to the hydrostatic transmission through the **R** port (8) and control valve adaptor (5).

# 4. LIFT CYLINDER

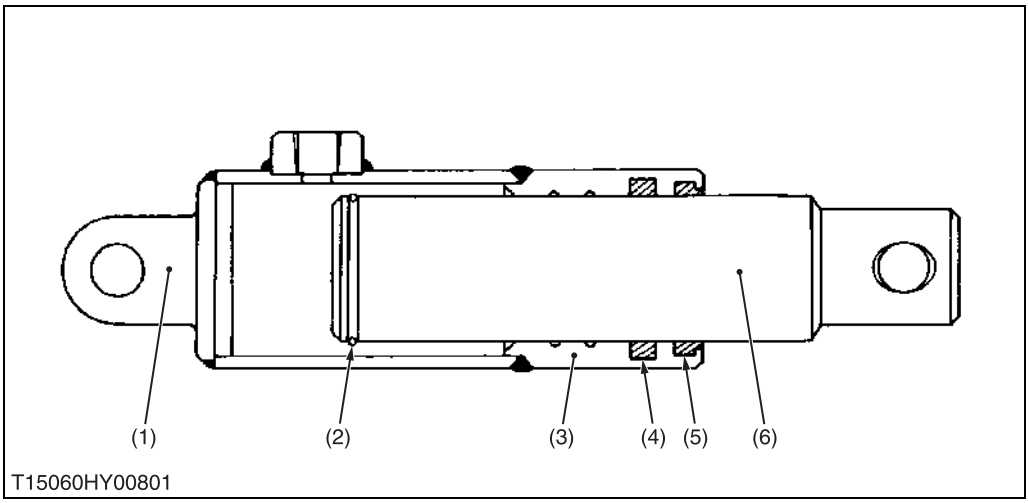


(1) Tube End
(2) Snap Ring
(3) Cylinder Tube
(4) Packing
(5) Scraper
(6) Piston Rod

W1014031

The lift cylinder consists of the tube end (1), cylinder tube (3), piston rod (6) and other parts as shown in the figure above.

This cylinder is single acting type.

# 5. MOWER LINKAGE

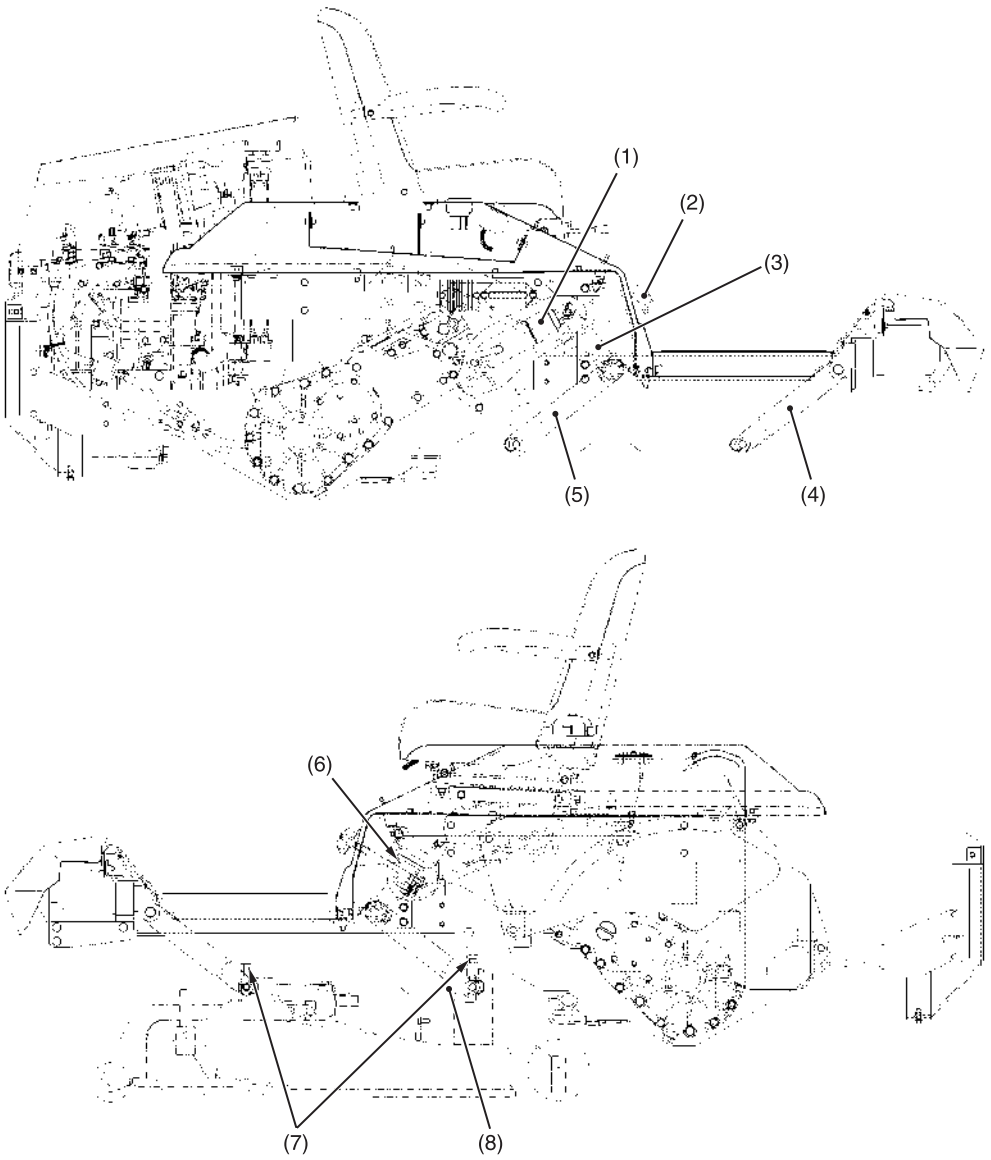


T15060HY00901

(1) Lift Cylinder
(2) Cutting Height Adjusting Dial
(3) Lift Shaft
(4) Front Arm
(5) Rear Arm
(6) Adjusting Cam
(7) Cutting Height Fine Tuning Bolt
(8) Horizon Plate

The lift shaft (3) and rear arm (5) are connected directly with clevice pins.

Front arm (4) and rear arm (5) are linked with horizon plate (8).

As the hydraulic control lever moves to up position, lift cylinder (1) is extended and lift shaft (3) is rotated to pull the rear arm (5) rearward. As a result, mower is lifted.

The cutting height adjusting dial (2) adjusts cutting height of mower by rotating the adjusting cam (6).

The level of mower deck is adjusted by adjusting the cutting height fine tuning bolt length (7).

# SERVICING

## CONTENTS

# 1. TROUBLESHOOTING

| Symptom | Probable Cause | Solution | Reference Page |
|---|---|---|---|
| **Mower Does Not Rise** | • Control valve malfunctioning<br>• Lift cylinder damaged<br>• Relief valve spring damaged<br>• Relief valve setting pressure too low<br>• Hydraulic pump defective<br>• Oil strainer clogged<br>• Suction pipe loosened or broken<br>• Suction pipe O-ring damaged<br>• Insufficient transmission oil | Repair or replace<br>Replace<br>Replace<br>Adjust<br>Replace<br>Clean or replace<br>Repair or replace<br>Replace<br>Refill | 4-S4<br>4-S6<br>4-S4<br>4-S3<br>2-S18<br>G-19<br>2-S18<br>2-S18<br>G-19 |
| **Mower Does Not Lower** | • Control valve malfunctioning | Repair or replace | 4-S4 |
| **Mower Drops by Its Weight** | • Lift cylinder worn or damaged<br>• Control valve malfunctioning | Replace<br>Replace | 4-S5<br>4-S4 |

W1014322

# 2. SERVICING SPECIFICATIONS

| Item | | Factory Specification | Allowable Limit |
|---|---|---|---|
| Relief Valve (Control Valve) | Setting Pressure | 3.14 to 3.73 MPa<br>32 to 38 kgf/cm$^2$<br>455 to 540 psi | – |

W1013874

# 3. CHECKING, DISASSEMBLING AND SERVICING

## [1] HYDRAULIC CONTROL VALVE, PUMP AND CYLINDER

### (1) Checking and Adjusting

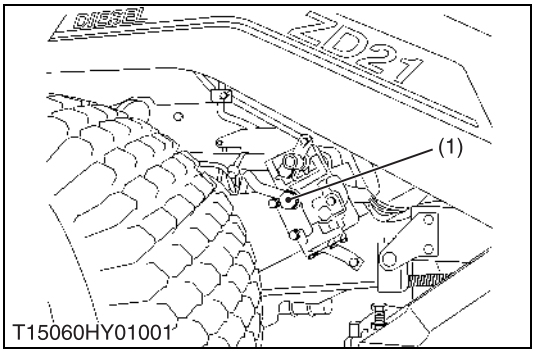


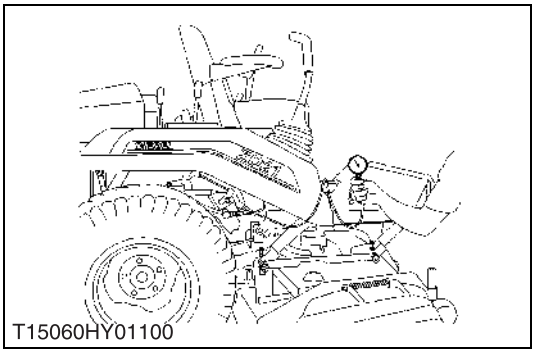


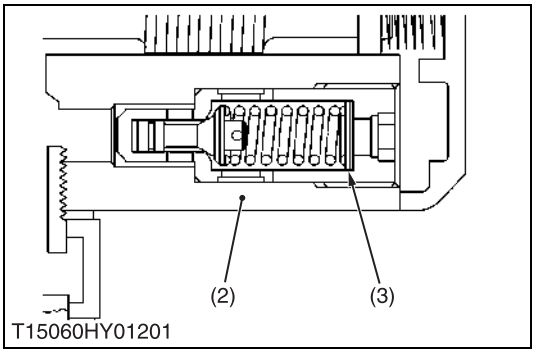


**Relief Valve Setting Pressure**

1. Remove the eye joint bolt (1) from the hydraulic.
2. Install the adaptor, cable and pressure gauge.
3. Start the engine and set at maximum speed.
4. Move the control lever to **"LIFT"** position to operate the relief valve and read the gauge.
5. If the pressure is not within the factory specifications, adjust with the adjusting shims (3).

| | | |
|---|---|---|
| Relief valve setting pressure | Factory spec. | 3.14 to 3.73 MPa<br>32 to 38 kgf/cm$^2$<br>455 to 540 psi |

**Condition**

- Engine speed …… Maximum
- Oil temperature … 45 to 55 °C
  113 to 131 °F

**(Reference)**

- Thickness of shims (3): 0.2 mm (0.0079 in.)
  0.3 mm (0.0118 in.)
  0.8 mm (0.0315 in.)

(1) Eye Joint Bolt
(2) Control Valve Assembly
(3) Shim

W1011441

### (2) Disassembling and Assembling

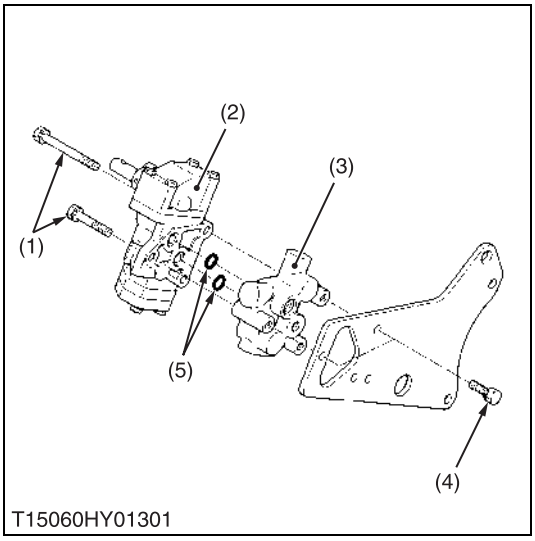


**Removing Control Valve**

1. Remove the control lever.
2. Disconnect the return pipe and hydraulic hose from control valve.
3. Remove the eye joint bolt from control valve then remove the control valve and bracket as a unit.
4. Remove the control valve adaptor mounting screws (4), and remove the control valve (2) with the control valve adaptor (3).
5. Remove the control valve mounting screws (1), and remove the control valve from the control valve adaptor.

**(When reassembling)**

- Take care not to damage the O-rings (5).

(1) Control Valve Mounting Screw
(2) Control Valve
(3) Control Valve Adaptor
(4) Control Valve Adaptor Mounting Screw
(5) O-ring

W1011940

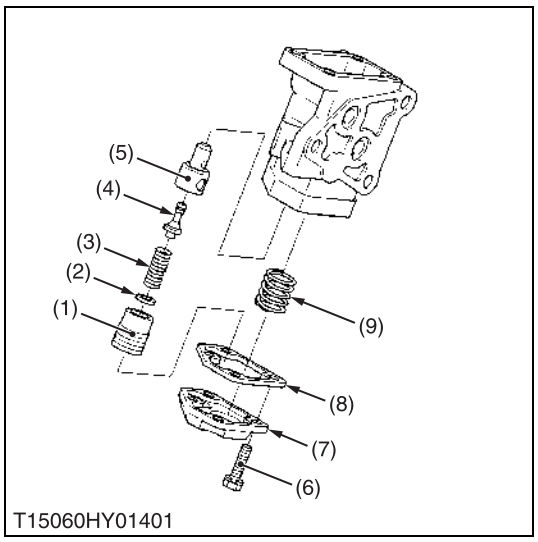


## Relief Cover and Relief Valve

1. Unscrew the relief cover mounting screws (6), and remove the relief cover (7).
2. Remove the spool return spring (9).
3. Unscrew the adjusting screw (1), and remove the adjusting shim (2), spring (3), poppet (4) and valve seat (5).

**(When reassembling)**

- Replace the relief cover gasket (8) with a new one.
- Install the relief valve, noting the number of shims.

■ **IMPORTANT**

- **After reassembling the relief valve, be sure to adjust its setting pressure. (See page 4-S3.)**

(1) Plug (Adjusting Screw)
(2) Adjusting Shim
(3) Spring
(4) Poppet
(5) Valve Seat
(6) Relief Cover Mounting Screw
(7) Relief Cover
(8) Relief Cover Gasket
(9) Spool Return Spring

W1011732

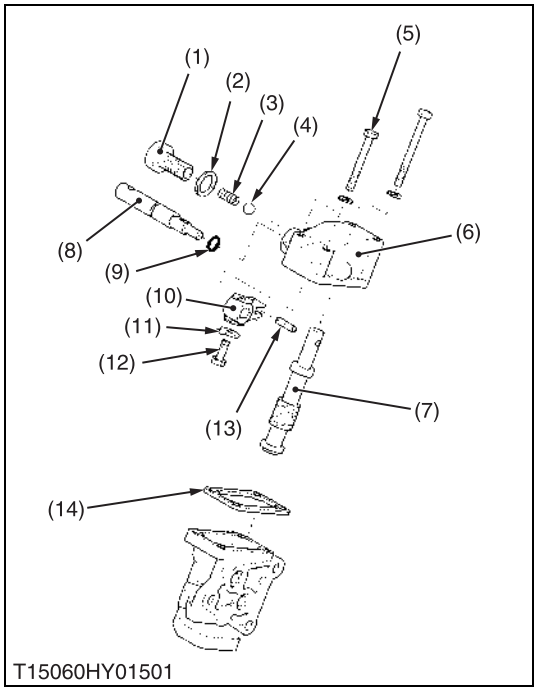


## Valve Cover and Spool

1. Remove the valve cover mounting screws (5), and remove the valve cover (6) with the control lever (8).
2. Pull out the spool (7).
3. Remove the screw (1), and remove the gasket (2), stopper spring (3) and steel ball (4).
4. Flatten the lock washer (11), and unscrew the valve guide arm mounting screw (12).
5. Remove the control lever (8) and valve guide arm (10).

**(When reassembling)**

- Visually inspect the spool for signs of scoring or damage. If defects are found, replace it.
- Replace the valve cover gasket (14) with a new one.
- Take care not to damage the O-ring (9).
- Correctly insert the spring pin (13) of the spool (7) in the groove of the valve guide arm (10).

(1) Screw
(2) Gasket
(3) Stopper Spring
(4) Steel Ball
(5) Valve Cover Mounting Screw
(6) Valve Cover
(7) Spool
(8) Control Lever
(9) O-ring
(10) Valve Guide Arm
(11) Lock Washer
(12) Valve Guide Arm Mounting Screw
(13) Spring Pin
(14) Valve Cover Gasket

W1012130

# [2] LIFT CYLINDER

## (1) Disassembling and Assembling

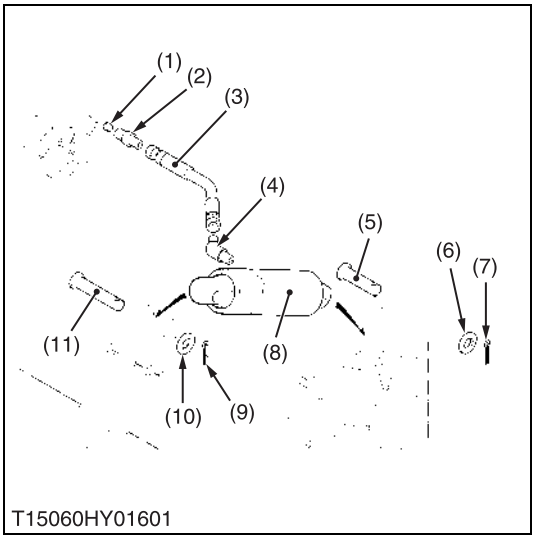


**Removing Lift Cylinder**

1. Disconnect the cylinder hose (3) from the lift cylinder (8).
2. Remove the clevis pins (11), (5), and remove the lift cylinder (8).

**(When reassembling)**

- Do not forget and put the orifice (1) when you remove the adaptor (4). And note the direction of the orifice (1).
- Use hydraulic thread sealer on the taper thread of adaptor (2), (4).

(1) Orifice
(2) Adaptor
(3) Cylinder Hose
(4) Adaptor
(5) Clevis Pin
(6) Plain Washer
(7) Cotter Pin
(8) Lift Cylinder
(9) Cotter Pin
(10) Plain Washer
(11) Clevis Pin

W1012682

**Disassembling Mower Linkage**

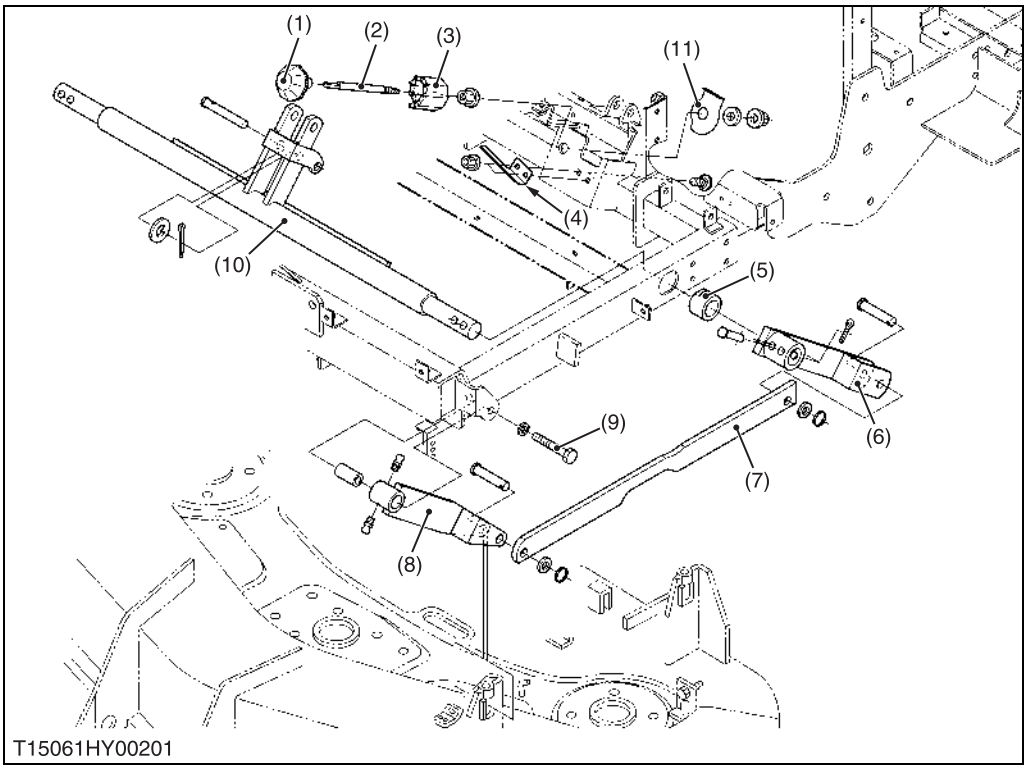


(1) Cutting Height Adjusting Dial Knob
(2) Cutting Height Adjusting Rod
(3) Adjusting Cam
(4) Retainer Spring
(5) Bush
(6) Rear Arm
(7) Horizon Plate
(8) Front Arm
(9) Front Arm Mounting Screw
(10) Lift Shaft
(11) Adjusting Coller (ZD28(F))

W1012934

1. Remove the both front arm mounting screws (9), then remove the front arms.
2. Remove the both clevis pins and the rear arms (6).
3. Remove the both side of bushes (5) and remove the lift shaft (10).
4. Remove the retainer spring (4).
5. Remove the cutting height adjusting dial knob (1).
6. Remove the nut and remove the adjusting cam (3) and cutting height adjusting rod (2).

**(When height by mower is lifted become insufficient : ZD28(F))**

1. Because the mower linkages are worn out and correct height was not able to be obtained, the adjustment coller (11) is built in.
2. 6.35 mm (0.25 in.) mower lifts high by changing the position of the adjusting coller (11).
3. The adjusting coller (11) is moved from former position underneath the adjusting cam (3).

# 5 ELECTRICAL SYSTEM

# MECHANISM

## CONTENTS

# 1. WIRING DIAGRAM

**[ZD18(F) · ZD21(F)]**

- **Color or Wiring**

| | | | |
|---|---|---|---|
| W ····· White | Or ····· Orange | BrR ····· Brown / Red | BW ····· Black / White |
| R ····· Red | BY ····· Black / Yellow | WR ····· White / Red | BR ····· Black / Red |
| L ····· Blue | WB ····· White / Black | WY ····· White / Yellow | GW ····· Green / White |
| P ····· Pink | GB ····· Green / Black | RW ····· Red / White | YR ····· Yellow / Red |
| B ····· Black | OrL ····· Orange / Blue | RY ····· Red / Yellow | YL ····· Yellow / Blue |
| G ····· Green | YB ····· Yellow / Black | YW ····· Yellow / White | |

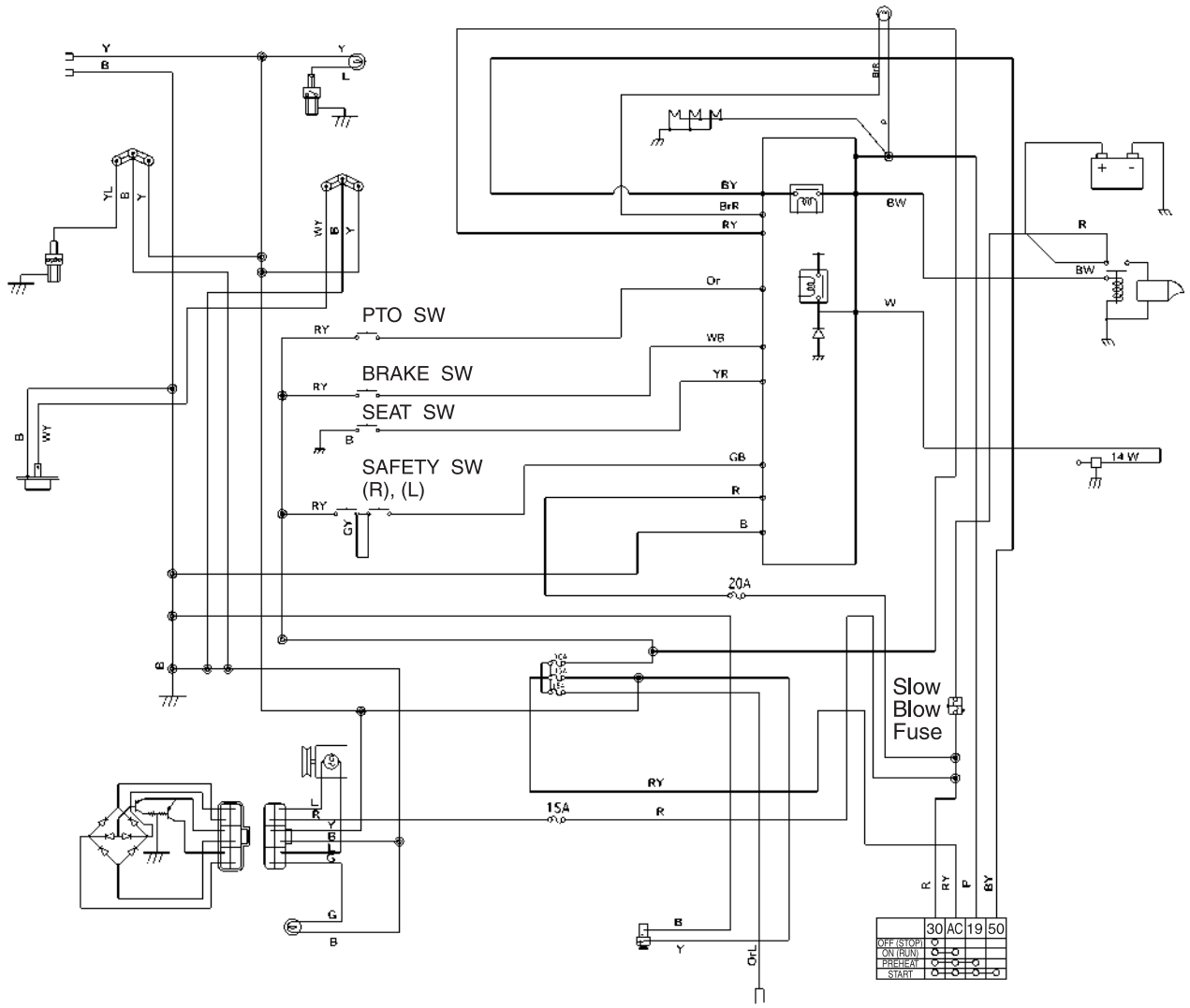


T15061EL00101

## [ZD28(F)]

- **Color or Wiring**

| | | | |
|---|---|---|---|
| W ····· White | Or ····· Orange | BrR ····· Brown / Red | BW ····· Black / White |
| R ····· Red | BY ····· Black / Yellow | WR ····· White / Red | BR ····· Black / Red |
| L ····· Blue | WB ····· White / Black | WY ····· White / Yellow | GW ····· Green / White |
| P ····· Pink | GB ····· Green / Black | RW ····· Red / White | YR ····· Yellow / Red |
| B ····· Black | OrL ····· Orange / Blue | RY ····· Red / Yellow | YL ····· Yellow / Blue |
| G ····· Green | YB ····· Yellow / Black | YW ····· Yellow / White | |

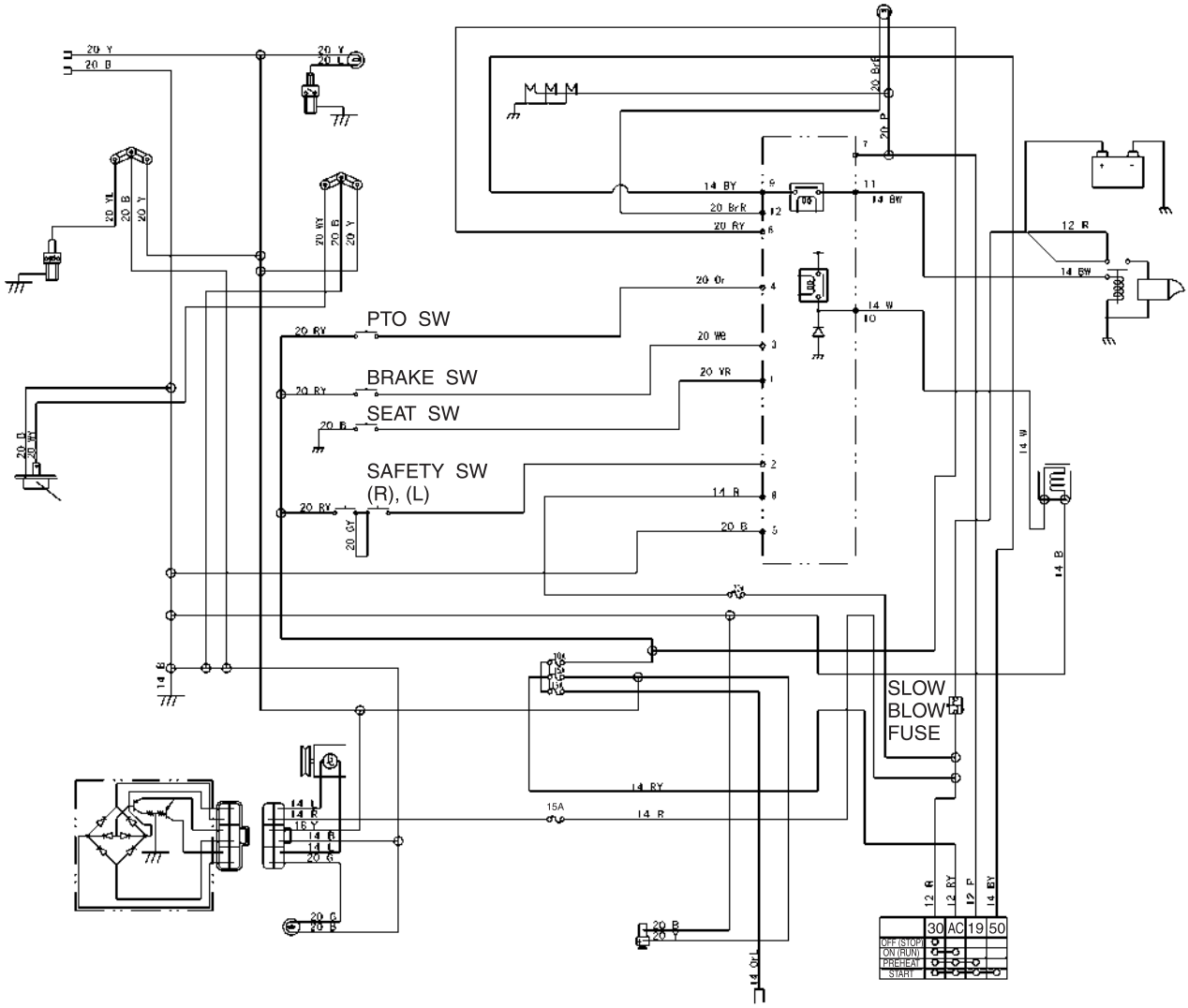


T15061EL00201

## [ZD18(F) · ZD21(F)]

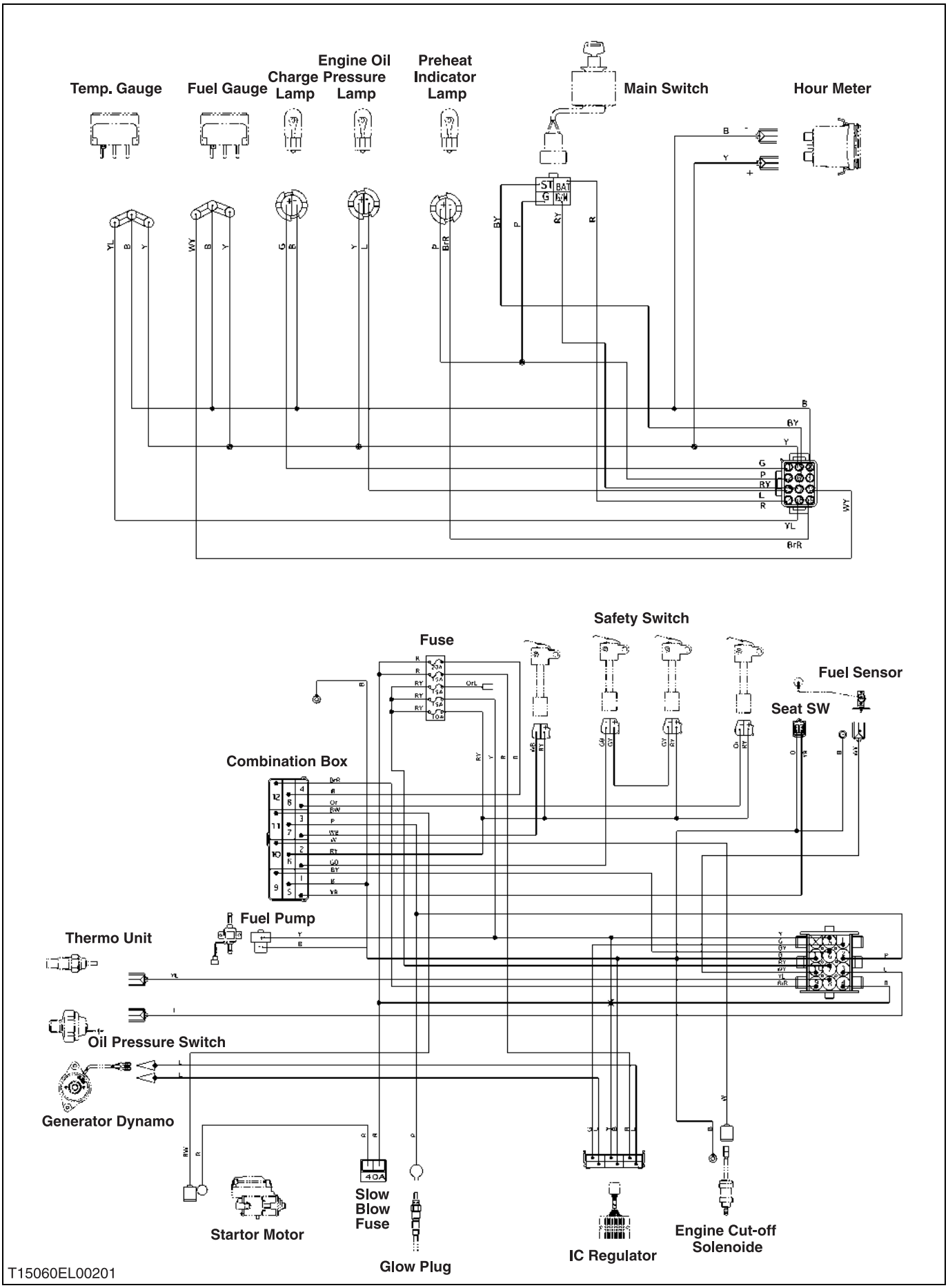
Temp. Gauge
Fuel Gauge
Charge Lamp
Engine Oil Pressure Lamp
Preheat Indicator Lamp
Main Switch
Hour Meter
Safety Switch
Fuse
Fuel Sensor
Seat SW
Combination Box
Fuel Pump
Thermo Unit
Oil Pressure Switch
Generator Dynamo
Slow Blow Fuse
Startor Motor
Glow Plug
IC Regulator
Engine Cut-off Solenoide
T15060EL00201

**[ZD28(F)]**

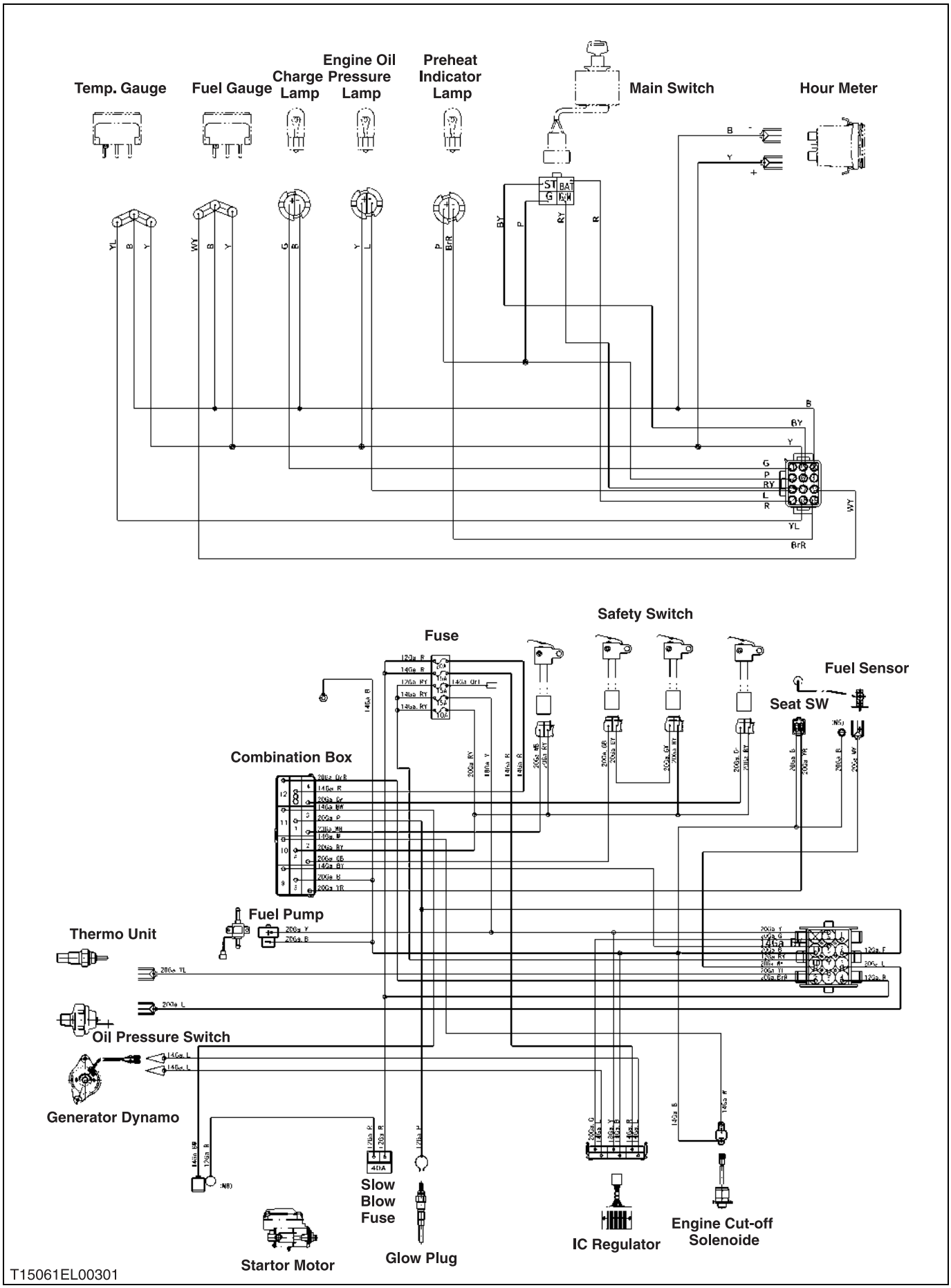
Temp. Gauge
Fuel Gauge
Charge Lamp
Engine Oil Pressure Lamp
Preheat Indicator Lamp
Main Switch
Hour Meter
Safety Switch
Fuse
Fuel Sensor
Seat SW
Combination Box
Fuel Pump
Thermo Unit
Oil Pressure Switch
Generator Dynamo
Slow Blow Fuse
Glow Plug
IC Regulator
Engine Cut-off Solenoide
Startor Motor
T15061EL00301

# 2. STARTING SYSTEM

**[ZD18(F) · ZD21(F)]**

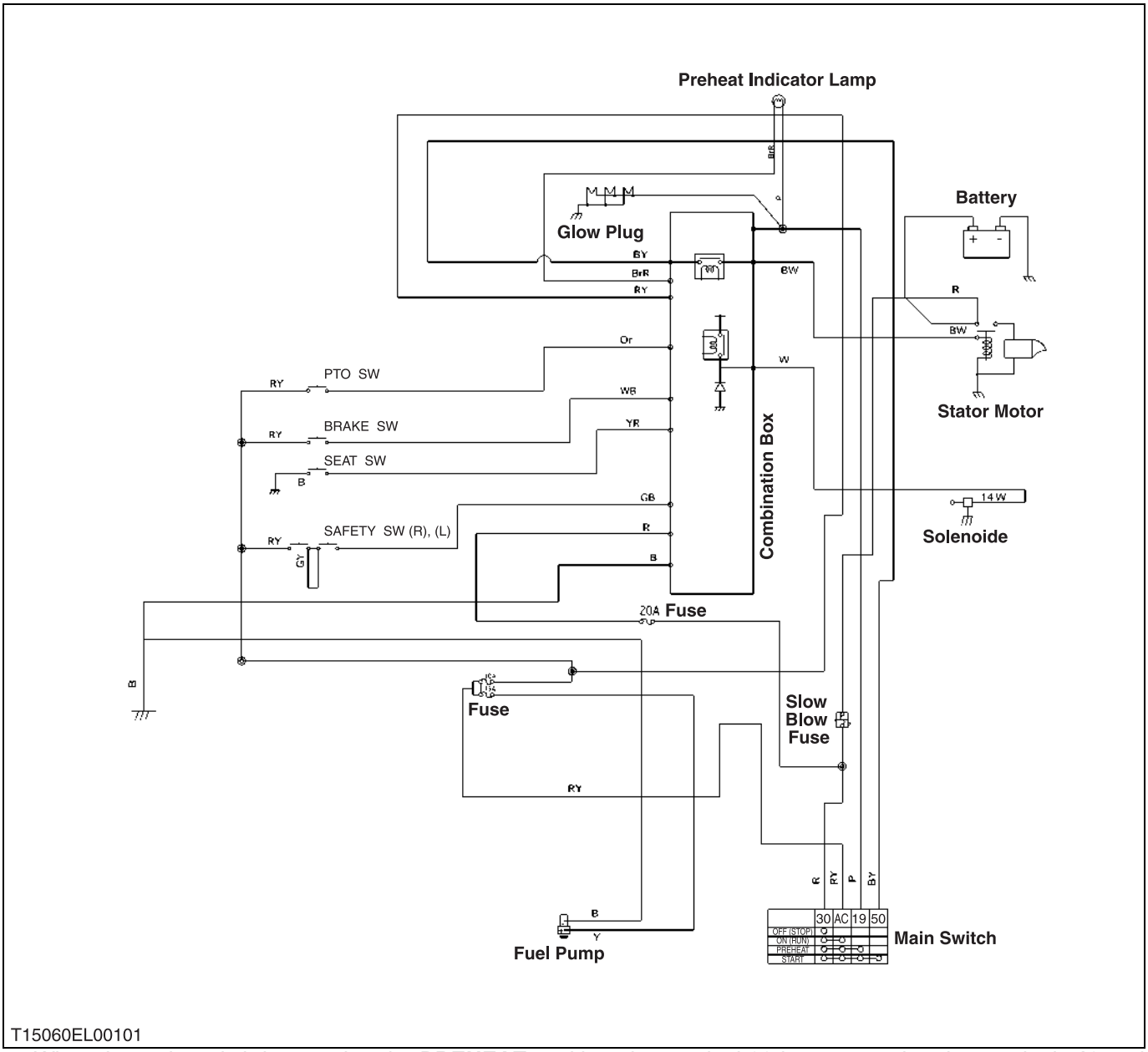


T15060EL00101

When the main switch is turned to the **PREHEAT** position, the terminal **30** is connected to the terminals **19** and **AC**. The glow plugs become red-hot, and the preheat indicator lamp also lights on while preheating.

When the main switch is then turned to the **START** position with the safety switches on, the terminal **30** is connected to the terminals **50** and **AC**. Consequently, battery current flows to the starter motor and start the engine.

The main switch automatically returns to the **ON** position, the terminal **30** is connected only to the terminal **AC**, thereby causing the starting circuit to be opened, stopping the starter motor.

When the main switch turned from the **ON** position to the **OFF** position, the fuel cut-off solenoid moves the fuel injection pump control rack to the **"No Fuel Injection"** position and stop the engine.

**[ZD28(F)]**

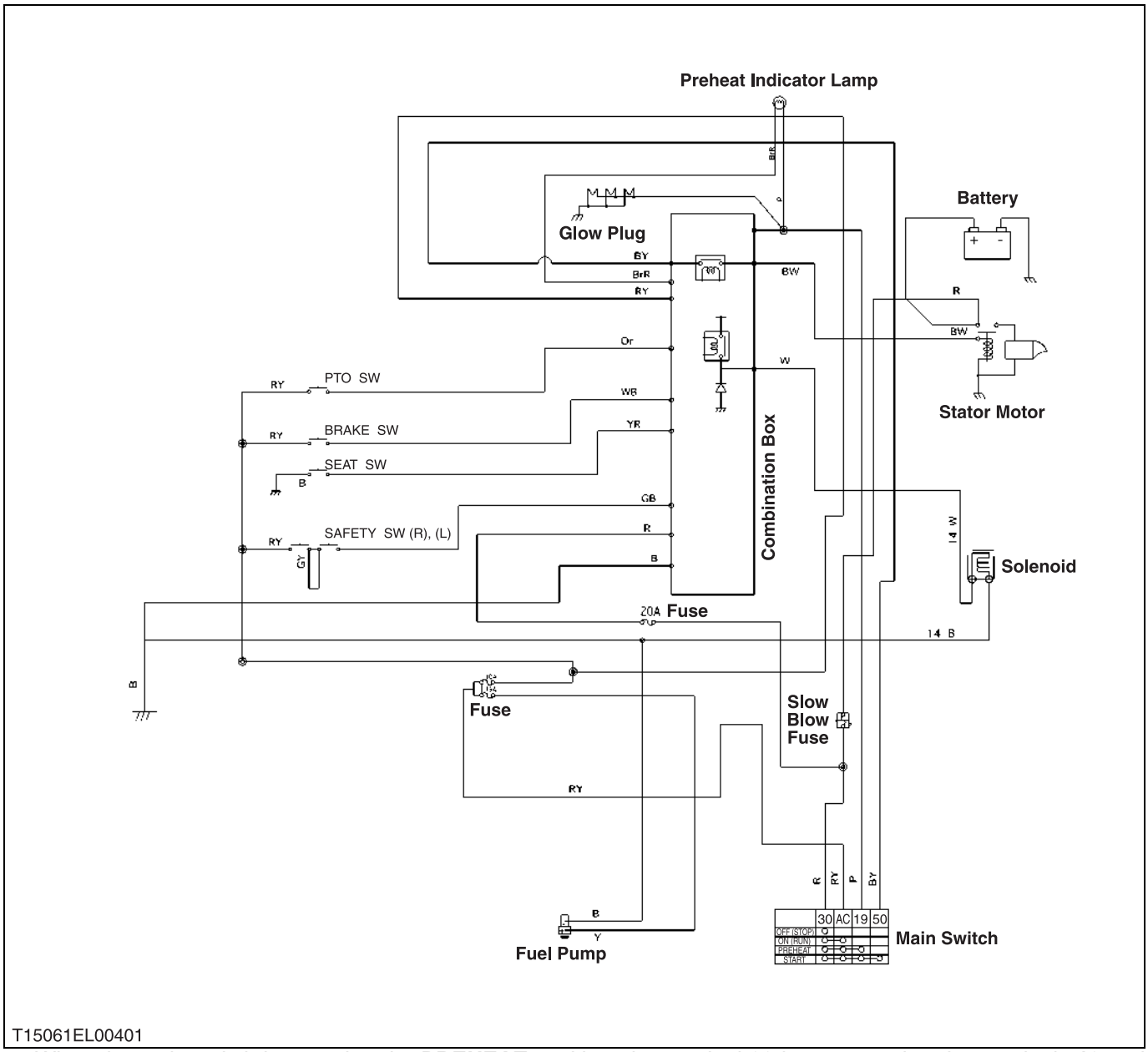


T15061EL00401

When the main switch is turned to the **PREHEAT** position, the terminal **30** is connected to the terminals **19** and **AC**. The glow plugs become red-hot, and the preheat indicator lamp also lights on while preheating.

When the main switch is then turned to the **START** position with the safety switches on, the terminal **30** is connected to the terminals **50** and **AC**. Consequently, battery current flows to the starter motor and start the engine.

The main switch automatically returns to the **ON** position, the terminal **30** is connected only to the terminal **AC**, thereby causing the starting circuit to be opened, stopping the starter motor.

When the main switch turned from the **ON** position to the **OFF** position, the fuel cut-off solenoid moves the fuel injection pump control rack to the **"No Fuel Injection"** position and stop the engine.

# [1] STARTER

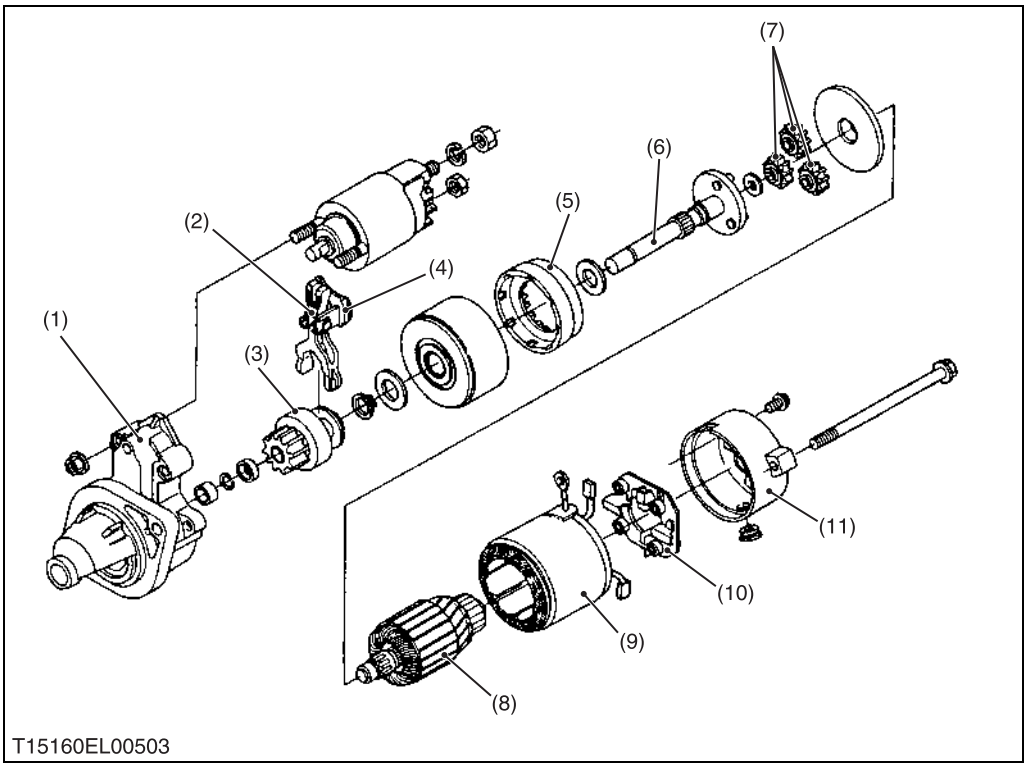


(1) Housing
(2) Magnetic Switch
(3) Overrunning Clutch
(4) Drive Lever
(5) Internal Gear
(6) Gear Shaft
(7) Planetary Gear
(8) Armature Shaft
(9) Yoke
(10) Brush Holder
(11) Rear End Holder

W1012893

The reduction system is used planetary gears, and the speed of gear shaft (6) is reduced to approximately one fifth of the armature shaft (8).

## [2] Glow Plug

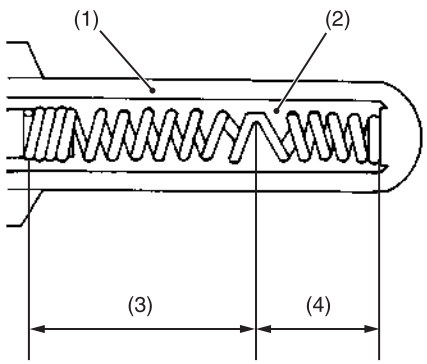


T12630EL05301

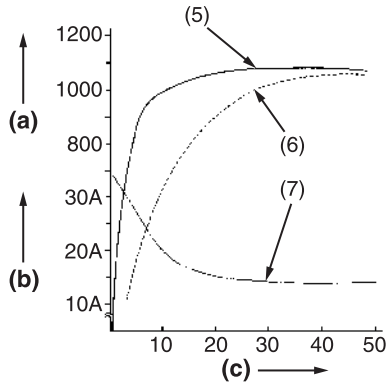


T12630EL05401

This plug is a two-material type QGS (Quick Glow System) for quick temperature rise, and has self-controlling function as well as excellent durability.

The heater (4) connected in series to the heater (3), which also functions as the resistor, is incorporated in the sheath tube (1) of the super glow plug.

The resistance of this heater (3) cum resistor is small when the temperature is low, while the resistance becomes large when the temperature rises.

Therefore, because sufficient current is flown to the heater (4) during the initial period of energization, the temperature rises quickly and the resistance grows with the rise in the temperature of the resistor, the flowing current is reduces to prevent the heater (4) from being heated.

The ignition point is in the area of 2 to 3 mm (0.079 to 0.118 in.) from the tip of the plug in order to reduce its projection into the combustion chamber.

(1) Sheath Tube
(2) Insulation Powder
(3) Heater also functioning as a Resistor
(4) Heater
(5) Super Glow Plug
(6) Conventional Quick-heating type Glow Plug
(7) Glow Plug Current

**(a) Glow Plug Temperature (°C)**
**(b) Current (A)**
**(c) Time (Sec.)**

W1013021

## [3] SAFETY SWITCH (LIMIT SWITCH)

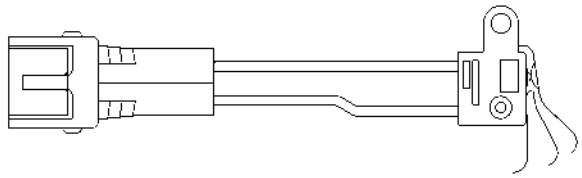

T15060EL00400

The safety switch prevents current from flowing to the starter when the safety switches are not depressed. This is to ensure safe starting.

The safety switches are located four (Parking brake lever, Motion control levers, Operator seat and PTO lever) different position.

W1013246

## [4] FUEL PUMP

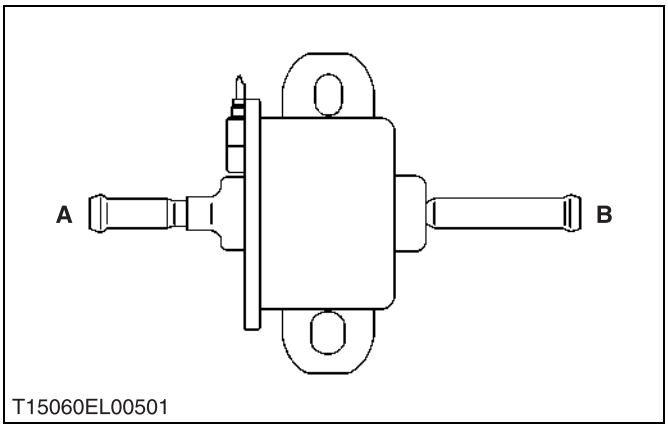


An electro magnetic fuel pump uses a transistor that causes the pump to start pumping fuel when the main switch is turned to the **"ON"** position.

Therefore, fuel is supplied to the fuel injection pump regardless of engine speed. This pump is driven by the battery. It can therefore be operated even with the engine being stopped.

**A: Inlet** **B: Outlet**

W1013306

## [5] ENGINE STOP SOLENOID

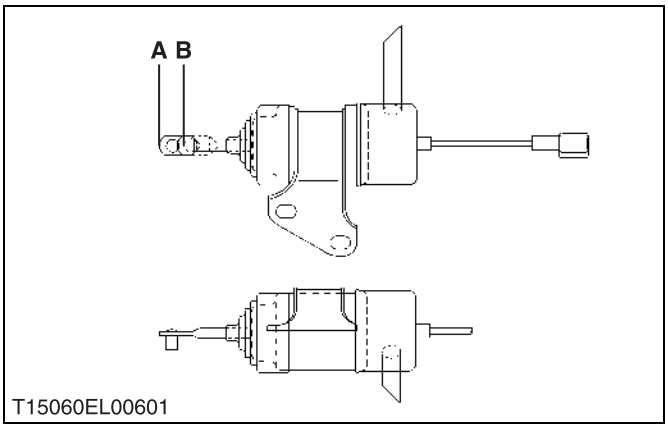


The timer relay is provided to actuate the engine stop solenoid approx. 10 seconds to stop after the main switch is turned from **ON** position to **OFF** position.

Flowing of the battery current into the coil while the timer relay contact point is closed attracts the plunger to actuate the stop lever of the injection pump. When the battery current stops, the plunger is returned to the original position by the spring.

**A: ON** **B: OFF**

W1013394

# 3. CHARGING SYSTEM

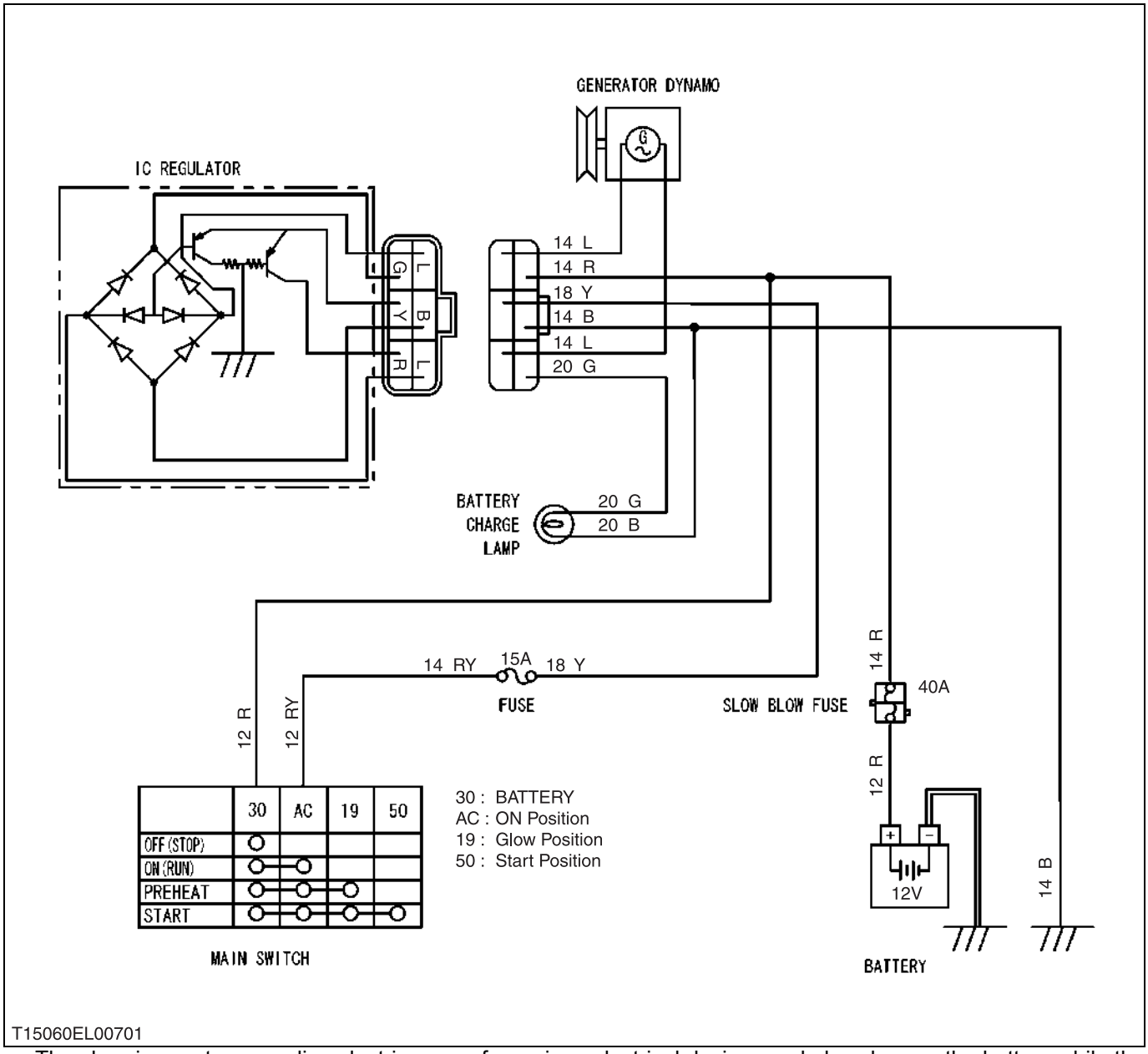


The charging system supplies electric power for various electrical devices and also charges the battery while the engine runs.

It consists of a AC dynamo and a regulator.

# [1] AC DYNAMO

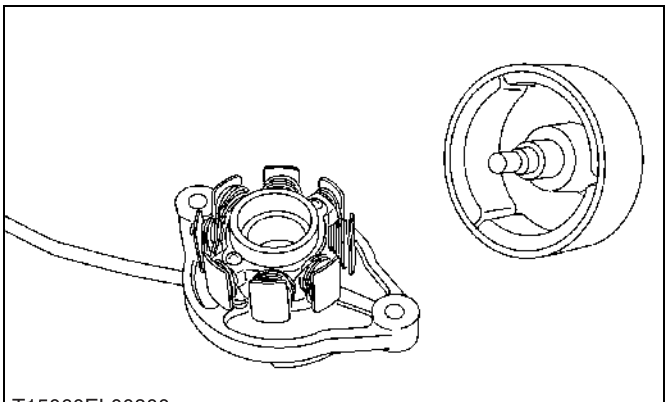
T15060EL00800

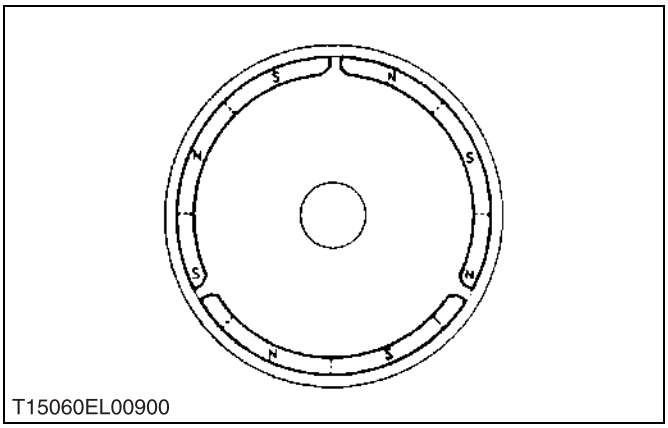

T15060EL00900

The dynamo is an 8-8 pole rotating magnet type generator. It is simple in construction, consisting of a stator and rotor. The rotor is made up of eight permanent magnet pole pieces assembled on a shaft and rotates on the center of the stator around which eight electromagnetic coils are provided for.

This dynamo produces higher voltage in slow speed rotation, and charges electric current to the battery during engine idling.

W1013535

# [2] REGULATOR

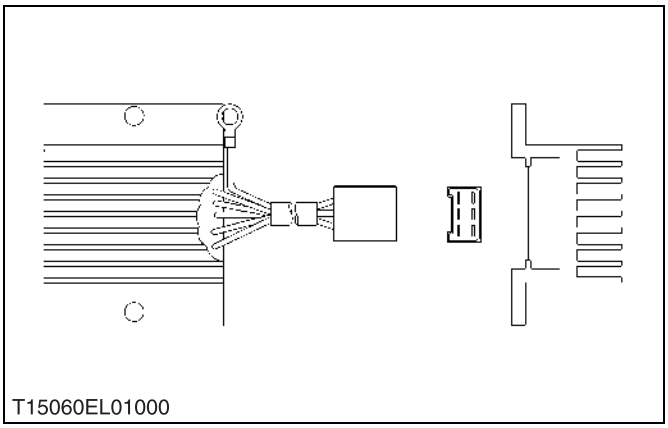
T15060EL01000

The regulator performs rectification and voltage regulation.

The regulator converts AC into DC which flows through the power consuming circuits and the battery, and also charges the battery.

If however, the battery voltage exceeds a certain level, the DC current is cut off from the charging circuit to prevent overcharging.

W1013678

# [3] EASY CHECKER

To check the conditions of tractor easily before and during operation, easy checker combination of lamps on the easy checker board is provided.

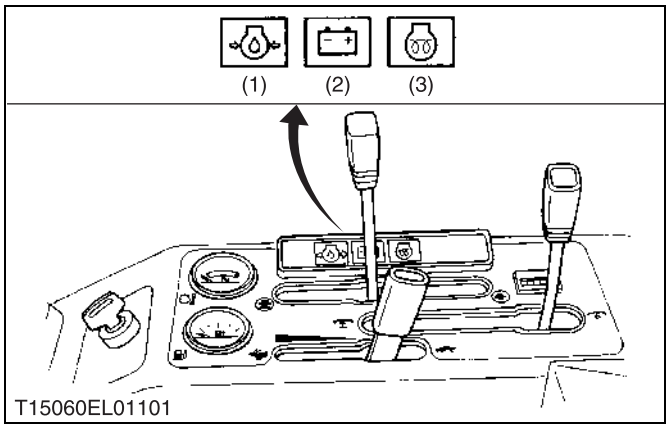


## ■ Indication Items

**(1) Oil Pressure Lamp**

When the engine oil pressure is low, this lamp illuminates.

**(2) Charge Lamp**

When the charging system is not functioning properly, this lamp illuminates.

**(3) Pre-heat Indicator Lamp**

When the key switch is in the **"Pre-heat"** position, the pre-heat indicator lamp illuminates.

W1013747

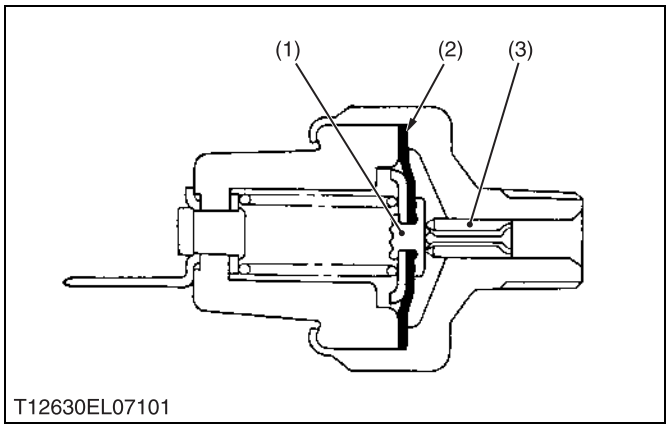


## ■ Oil Pressure Switch

While oil pressure is high and the force applied to the diaphragm (2) is larger than the spring tension, the terminal contact (1) is open separated from the body contact (3). If the pressure drops below approx. 49 kPa (0.5 kgf/cm$^2$, 7.1 psi), the contact closes.

(1) Terminal Contact
(2) Diaphragm
(3) Body Contact

W1013868

# 4. GAUGES

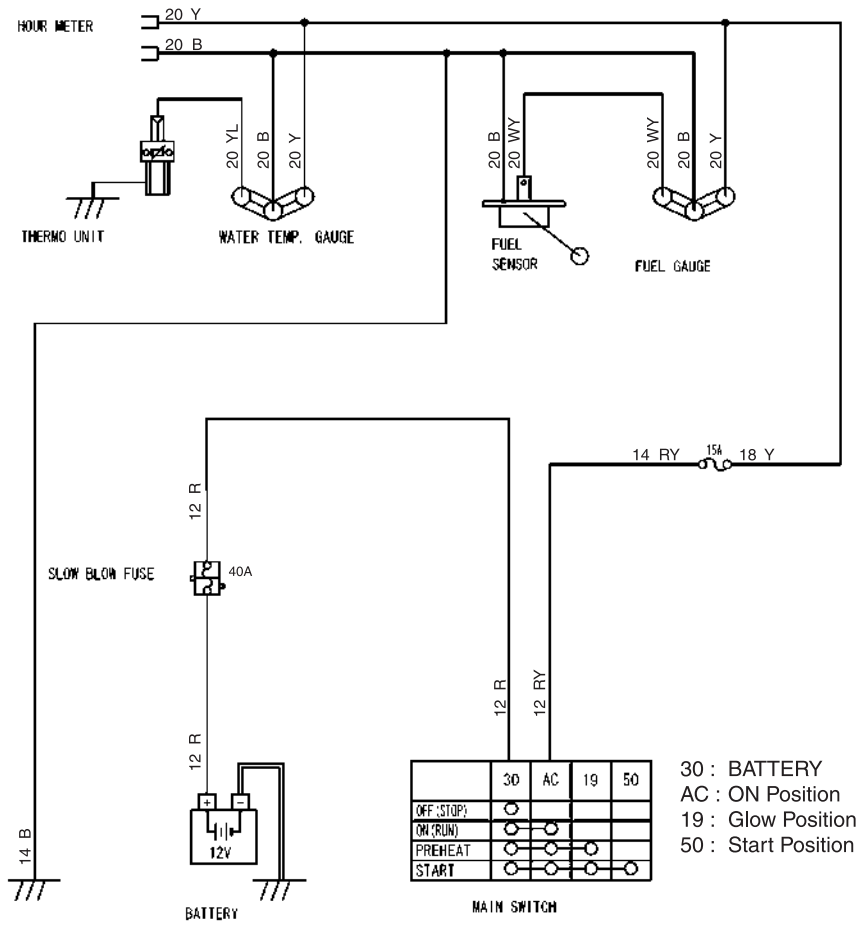


T15060EL01201

The fuel quantity and coolant temperature are indicated by the ammeters. The ammeters indicate each amperage flowing through the fuel level sensor for the fuel quantity detection and through the coolant temperature sensor for the coolant temperature detection.

## [1] FUEL QUANTITY

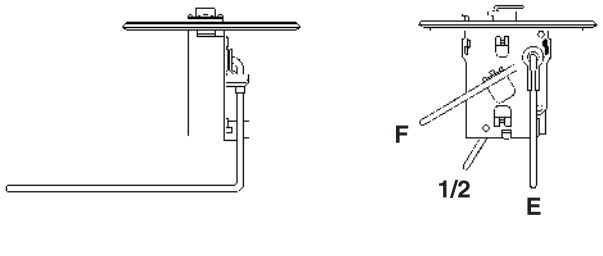


T15060EL01301

### ■ Fuel Level Sensor

The remaining fuel quantity is detected by the fuel level sensor installed in the fuel tank and indicated on the fuel gauge. For detection, a float and a resistor are used.

As the float lowers, the resistance of the variable resistor varies. The relation between the amount of fuel and the resistance is as follows.

| F | 1/2 | E (Remaining fuel of approx. 5.0 L, 1.32 U.S.gal., 1.10 Imp.gal.) |
|---|---|---|
| 1 to 5 Ω | 28.5 to 36.5 Ω | 103 to 117 Ω |

W1013985

# [2] COOLANT TEMPERATURE

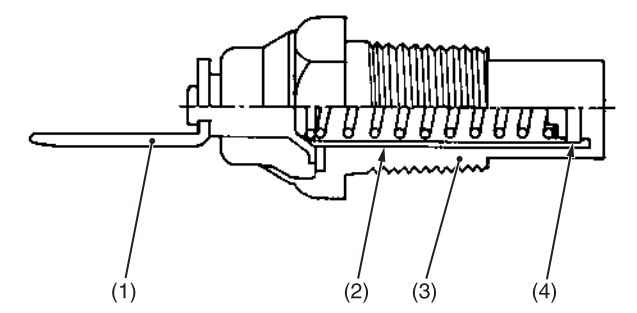


T12630EL07501

## ■ Coolant Temperature Sensor

The coolant temperature sensor is installed to the cylinder head of engine, and its tip is in touch with the coolant. It contains a thermistor (4) whose electrical resistance decreases as the temperature increases.

Current varies with changes in the coolant temperature, and the increases or decreases in the current move the pointer of gauge.

| Characteristics of Thermistor | |
|---|---|
| Temperature | Resistance |
| 50 °C (122 °F) | 153.9 Ω |
| 80 °C (176 °F) | 51.9 Ω |
| 100 °C (212 °F) | 27.4 Ω |
| 120 °C (248 °F) | 16.1 Ω |

(1) Terminal
(2) Insulator
(3) Body
(4) Thermistor

W1014123

# SERVICING

## CONTENTS

# 1. TROUBLESHOOTING

| Symptom | Probable Cause | Solution | Reference Page |
|---|---|---|---|
| **All Electrical Equipments Do Not Operate** | • Battery discharged or defective | Recharge or replace | G-26 |
| | • Battery positive cable disconnected or improperly connected | Repair or replace | 5-S5 |
| | • Battery negative cable disconnected or improperly connected | Repair or replace | 5-S5 |
| | • Slow blow fuse blown | Replace | G-36 |
| **Fuse Blown Frequently** | • Short-circuited | Repair or replace | G-36 |

W1014322

**BATTERY**

| | | | |
|---|---|---|---|
| **Battery Discharges Too Quickly** | • Battery defective | Replace | G-24 |
| | • Dynamo defective | Repair or replace | 5-S15 |
| | • IC regulator defective | Replace | – |
| | • Wiring harness disconnected or improperly connected (between battery positive terminal and regulator **B** terminal) | Repair or replace | – |
| | • Cooling fan belt slipping | Adjust tension | G-27 |

W1010913

**STARTING SYSTEM**

| | | | |
|---|---|---|---|
| **Starter Motor Does Not Operate** | • Battery discharged or defective | Recharge or replace | G-26 |
| | • Slow blow fuse blown | Replace | G-36 |
| | • Safety switch defective | Replace | 5-S10 |
| | • Wiring harness disconnected or improperly connected (between main switch **50** terminal and safety switches, between safety switches and starter motor, between battery positive terminal and starter motor) | Repair or replace | – |
| | • Starter motor defective | Repair or replace | 5-S12 |
| | • Main switch defective | Replace | – |
| **Engine Does Not Stop When Main Switch Is Turned OFF** | • Fuse blown (20 A) | Replace | G-36 |
| | • Wiring harness disconnected or improperly connected (between main switch **AC** terminal and engine stop solenoid) | Repair or replace | – |
| | • Engine stop solenoid defective | Replace | 5-S11 |
| | • Combination box defective | Replace | – |
| **Engine Does Not Start** | • Engine stop solenoid defective | Replace | 5-S11 |
| | • Combination box defective | Replace | – |

W1011297

## CHARGING SYSTEM

| Symptom | Probable Cause | Solution | Reference Page |
|---|---|---|---|
| **Charging Lamp Does Not Light When Main Switch Is Turned ON** | • Fuse blown (15 A)<br>• Wiring harness disconnected or improperly connected (between main switch **AC** terminal and panel board, between panel board and dynamo)<br>• Dynamo defective<br>• Regulator defective | Replace<br>Repair or replace<br><br>Repair or replace<br>Replace | G-36<br>–<br><br>5-S15<br>– |
| **Charging Lamp Does Not Go Off When Engine Is Running** | • Wiring harness disconnected or improperly connected (between main switch **30** terminal and dynamo, between panel board and dynamo)<br>• Dynamo defective<br>• Regulator defective | Repair or replace<br><br>Repair or replace<br>Replace | –<br><br>5-S15<br>– |

W1011953

## GAUGES

| | | | |
|---|---|---|---|
| **Fuel Gauge Does Not Function** | • Fuel gauge defective<br>• Fuel level sensor defective<br>• Wiring harness disconnected or improperly connected (between fuel gauge and fuel level sensor) | Replace<br>Replace<br>Repair or replace | 2-S12<br>2-S12<br>– |
| **Coolant Temperature Gauge Does Not Function** | • Coolant temperature gauge defective<br>• Coolant temperature sensor defective<br>• Wiring harness disconnected or improperly connected (between coolant temperature gauge and coolant temperature sensor) | Replace<br>Replace<br>Repair or replace | 5-S18<br>5-S18<br>– |

W1013515

# 2. SERVICING SPECIFICATIONS

| Item | | Factory Specification | Allowable Limit |
|---|---|---|---|
| Battery | Voltage | More than 12 V | – |
| | Potential Difference | Less than 0.1 V | – |
| Glow Plug | Resistance | Approx. 0.9 Ω | – |
| Starter | | | |
| Commutator | O.D. | 30.0 mm<br>1.181 in. | 29.0 mm<br>1.142 in. |
| | Difference of O.D.'s | Less than 0.02 mm<br>0.0008 in. | 0.05 mm<br>0.0020 in. |
| Mica | Undercut | 0.50 to 0.80 mm<br>0.0197 to 0.0315 in. | 0.20 mm<br>0.0079 in. |
| Brush | Length | 14.0 mm<br>0.551 in. | 9.0 mm<br>0.354 in. |
| AC Dynamo | Charging Current / Dynamo Speed | 14 to 15 A / 5200 rpm | – |
| | Charging Voltage / Dynamo Speed | 14 to 15 V / 5200 rpm | – |

W1013874

# 3. TIGHTENING TORQUES

Tightening torques of screws, bolts and nuts on the table below are especially specified.
(For general use screws, bolts and nuts: See page G-8.)

| Item | N·m | kgf·m | ft-lbs |
|---|---|---|---|
| Starter | | | |
| **B** terminal nut | 5.9 to 11.8 | 0.6 to 1.2 | 4.3 to 8.7 |
| AC dynamo | | | |
| Stator nut | 39.2 to 44.1 | 4.0 to 4.5 | 28.9 to 32.5 |

W1012736

# 4. CHECKING, DISASSEMBLING AND SERVICING

**CAUTION**

- **To avoid accidental short circuit, be sure to attach the positive cable to the positive terminal before the negative cable is attached to the negative terminal.**
- **Never remove the battery cap while the engine is running.**
- **Keep electrolyte away from eyes, hands and clothes. If you are spattered with it, wash it away completely with water immediately.**
- **Keep open sparks and flames away from the battery at all times. Hydrogen gas mixed with oxygen becomes very explosive.**

■ **IMPORTANT**

- **If the machine is to be operated for a short time without battery (using a slave battery for starting), use additional current (lights) while engine is running and insulate terminal of battery. If this advice is disregarded, damage to alternator and regulator may result.**

## [1] BATTERY

### (1) Checking

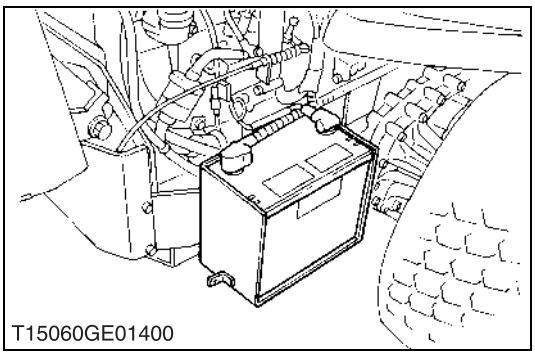

T15060GE01400

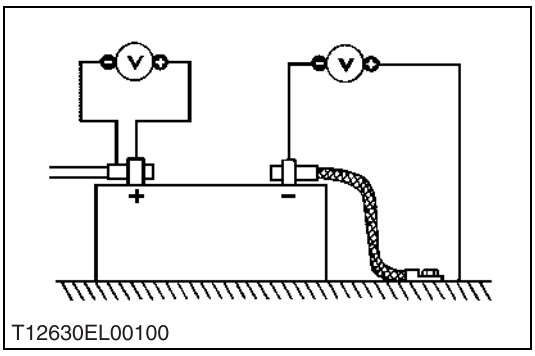


T12630EL00100

**Battery Voltage**

1. Stop the engine and turn the main switch off.
2. Connect the COM (–) lead of the voltmeter to the battery's negative terminal post and the (+) lead to the positive terminal post, and measure the battery voltage.
3. If the battery voltage is less than the factory specification, check the battery specific gravity and recharge the battery.

| | | |
|---|---|---|
| Battery voltage | Factory spec. | More than 12 V |

W1015335

**Battery Terminal Connection**

1. Turn the main switch on, and turn on the head light.
2. Measure the voltage with a voltmeter across the battery's positive terminal post and the cable terminal, and the voltage across the battery's negative terminal post and the chassis.
3. If the measurement exceeds the factory specification, clean the battery terminal posts and cable clamps, and tighten them firmly.

| | | |
|---|---|---|
| Potential difference | Factory spec. | Less than 0.1 V |

W1015435

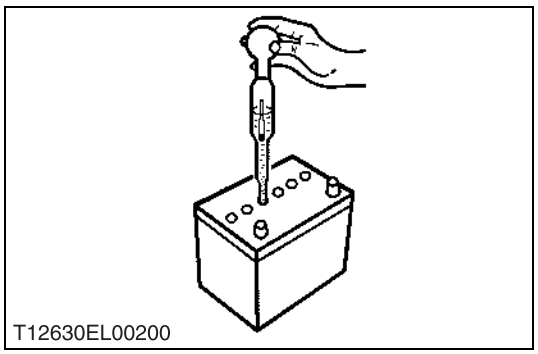
T12630EL00200

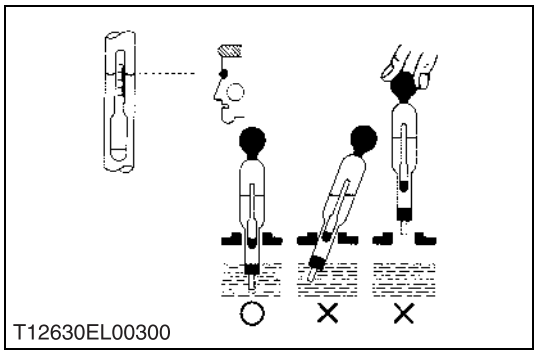
T12630EL00300

**Battery Specific Gravity**

1. Check the specific gravity of the electrolyte in each cell with a hydrometer.
2. When the electrolyte temperature differs from that at which the hydrometer was calibrated, correct the specific gravity reading following the formula mentioned in **(Reference)**.
3. If the specific gravity is less than 1.215 (after it is corrected for temperature), charge or replace the battery.
4. If the specific gravity differs between any two cells by more than 0.05, replace the battery.

■ **NOTE**

- **Hold the hydrometer tube vertical without removing it from the electrolyte.**
- **Do not suck too much electrolyte into the tube.**
- **Allow the float to move freely and hold the hydrometer at eye level.**
- **The hydrometer reading must be taken at the highest electrolyte level.**

**(Reference)**

- Specific gravity slightly varies with temperature. To be exact, the specific gravity decreases by 0.0007 with an increase of 1 °C (0.0004 with an increase of 1 °F) in temperature, and increases by 0.0007 with a decreases of 1 °C (0.0004 with a decrease of 1 °F).
  Therefore, using 20 °C (68 °F) as a reference, the specific gravity reading must be corrected by the following formula:
  - Specific gravity at 20 °C = Measured value + 0.0007 × (electrolyte temperature – 20 °C)
  - Specific gravity at 68 °F = Measured value + 0.0004 × (electrolyte temperature – 68 °F)

| Specific Gravity | State of Charge |
|---|---|
| 1.260 Sp. Gr. | 100 % Charged |
| 1.230 Sp. Gr. | 75 % Charged |
| 1.200 Sp. Gr. | 50 % Charged |
| 1.170 Sp. Gr. | 25 % Charged |
| 1.140 Sp. Gr. | Very Little Useful Capacity |
| 1.110 Sp. Gr. | Discharged |

At an electrolyte temperature of 20 °C (68 °F)

W1015530

# [2] STARTING SYSTEM

## (1) Checking

## (A) Safety Switches

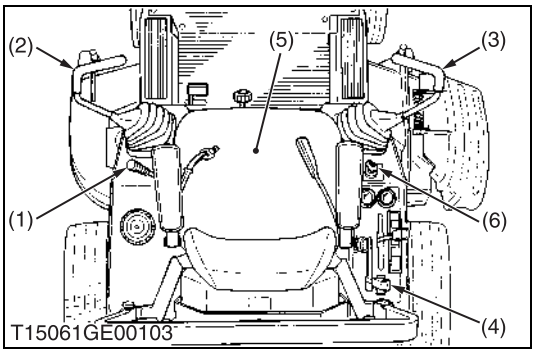


**Method of Inspecting Each Control**

A defective location can be judge by checking function of each safety switch one by one as shown in the table below.

**(Reference)**

- Type of Safety Switch
  Parking Brake Lever … Normal Close
  Motion Control Lever … Normal Open
  PTO Lever …… Normal Open
  Operator Seat … Normal Open

(1) Parking Brake Lever
(2) Motion Control Lever (LH)
(3) Motion Control Lever (RH)
(4) PTO Lever
(5) Operator Seat
(6) Key Switch

W1016450

| Combination | State of set such as operation levers | | | | | Control operation | |
|---|---|---|---|---|---|---|---|
| | Motion control lever (LH) | Motion control lever (RH) | PTO lever | Parking brake lever | Operator seat | Automatic engine stop | Engine start (Right or wrong) |
| 1 | Parking position (Neutral) | Parking position (Neutral) | Off position | Lock position | On the seat | Keep running** | Possible |
| 2 | | | | | Leave the seat* | | Impossible |
| 3 | | | | Release position* | On the seat | | |
| 4 | | | On position* | Lock position | | | |
| 5 | | Operating position* | Off position | | | Stop few seconds later | |
| 6 | Operating position* | Parking position | | | | | |

* In this part, the safety switch is a position of off. And it is a checked place.
** In this part, the voltage of the terminal of the engine stop solenoid is 0 V.

W1016546

■ **How to read meaning from table above.**

After the engine start, for instance,

1. If the engine does not stop in combination 2 when leaving the seat, the seat safety switch is bad. Moreover, the engine cannot be started without as every sitting on the seat.
2. If the engine starts with the parking brake released at combination 3, the parking brake safety switch is bad.
3. If the engine starts in combination 4 when the PTO lever is **ON** position, the PTO lever switch is bad.
4. If the engine starts in combinations 5 and 6 when the motion control lever is a **Operating** position, the motion control lever safety switch is bad. Moreover, the engine stops if the parking lever is not released within two seconds after the engine starts.

## (B) Main Switch

**Connector Voltage**

1. Remove the rear wheel (RH) and fender under cover.
2. Measure the voltage with a voltmeter across the connector **30** (Red) terminal and chassis.
3. If the voltage differs from the battery voltage (11 to 14 V), the wiring harness is faulty.

| | | |
|---|---|---|
| Voltage | Connector **30** terminal - chassis | Approx. battery voltage |

W1017121

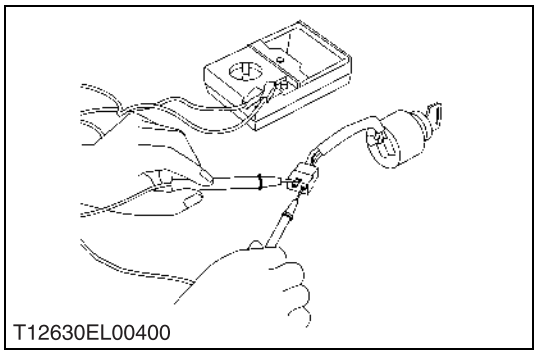

T12630EL00400

**Main Switch Continuity**

**1) Main Switch Key at OFF Position**

1. Set the main switch **OFF** position.
2. Measure the resistance with an ohmmeter across the **30** terminal and the **AC** terminal, **30** terminal and **50** terminal, **30** terminal and **19** terminal.
3. If infinity is not indicated, the contacts of the main switch are faulty.

| | | |
|---|---|---|
| Resistance | **30** terminal - **AC** terminal | Infinity |
| | **30** terminal - **50** terminal | |
| | **30** terminal - **19** terminal | |

**2) Main Switch Key at ON Position**

1. Set the main switch **ON** position.
2. Measure the resistance with an ohmmeter across the **30** terminal and the **AC** terminal.
3. If 0 ohm is not indicated, the **30** - **AC** contact of the main switch are faulty.

| | | |
|---|---|---|
| Resistance | **30** terminal - **AC** terminal | 0 Ω |

**3) Main Switch Key at PREHEAT Position**

1. Set and hold the main switch key at the **PREHEAT** position.
2. Measure the resistance with an ohmmeter across the **30** terminal and the **19** terminal, and measure the resistance across the **30** terminal and the **AC** terminal.
3. If 0 ohm is not indicated, these contacts of the main switch are faulty.

| | | |
|---|---|---|
| Resistance | **30** terminal - **19** terminal | 0 Ω |
| | **30** terminal - **AC** terminal | |

**4) Main Switch Key at START Position**

1. Set and hold the main switch key at the **START** position.
2. Measure the resistance with an ohmmeter across the **30** terminal and the **19** terminal, across the **30** terminal and the **50** terminal, and across the **30** terminal and the **AC** terminal.
3. If 0 ohm is not indicated, these contacts of the main switch are faulty.

| | | |
|---|---|---|
| Resistance | **30** terminal - **19** terminal | 0 Ω |
| | **30** terminal - **50** terminal | |
| | **30** terminal - **AC** terminal | |

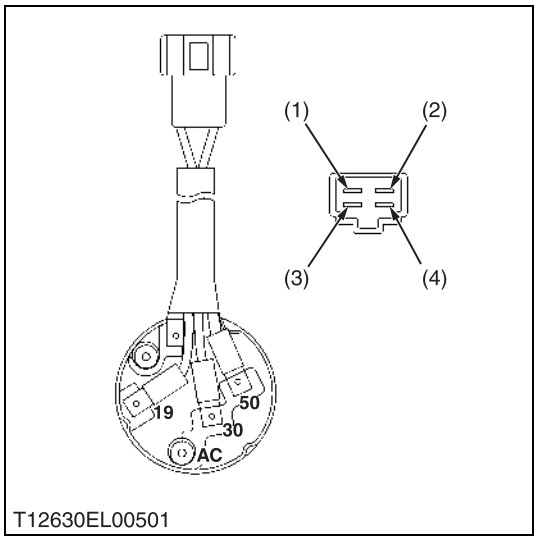


T12630EL00501

(1) **19** Terminal (Black / Red)
(2) **AC** Terminal (Red / White)
(3) **50** Terminal (Black / White)
(4) **30** Terminal (Red)

W1017293

## (C) Starter

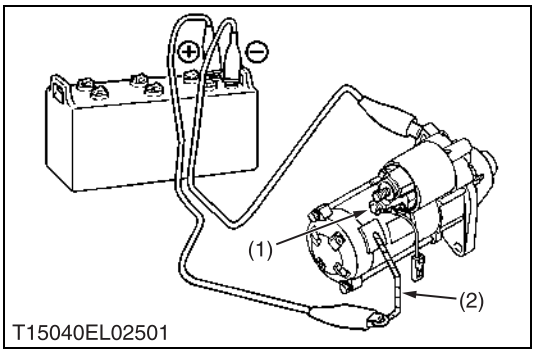


**Motor Test**

**CAUTION**

- **Secure the starter to prevent it from jumping up and down while testing the motor.**

1. Disconnect the battery negative cable from the battery.
2. Disconnect the battery positive cable and the leads from the starter.
3. Remove the starter from the engine.
4. Disconnect the connecting lead (2) from the starter **C** terminal (1).
5. Connect a jumper lead from the connecting lead (2) to the battery positive terminal post.
6. Connect a jumper lead momentarily between the starter motor housing and the battery negative terminal post.
7. If the motor does not run, check the motor.

(1) **C** Terminal (2) Connecting Lead

W1018134

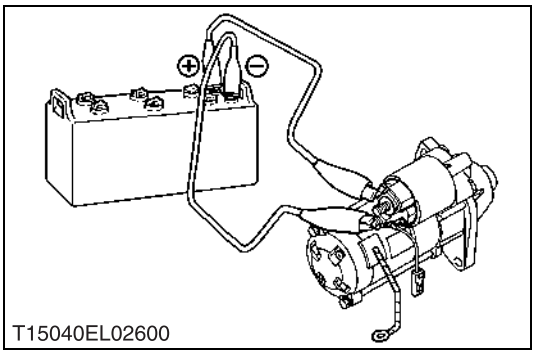


**Magnet Switch Test (Pull-in, Holding Coils)**

■ **NOTE**

- **Each test should be carried out for a start time (3 to 5 seconds), and at half of the rated voltage (6V)**

**1) Checking Pull-in Coil**

1. Connect jumper lead from the battery's negative terminal post to the **C** terminal.
2. The plunger should be attached strongly when a jumper lead is connected from the battery positive terminal to the **S** terminal.

**2) Checking Holding Coil**

1. Connect jumper leads from the battery's negative terminal post to the body and the battery's positive terminal post to the **S** terminal.
2. Push the plunger in by hand and release it. Then, the plunger should remain being attracted.

W1018490

## (D) Glow Plug

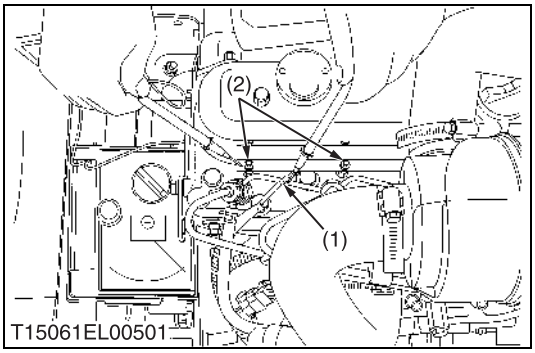


**Lead Terminal Voltage**

1. Disconnect the wiring lead (1) from the glow plug (2) after turning the main switch off.
2. Turn the main switch key to the **"PREHEAT"** position, and measure the voltage between the lead terminal and the chassis.
3. Turn the main switch key to the **"START"** position, and measure the voltage with a voltmeter between the lead terminal and the chassis.
4. If the voltage at either position differs from the battery voltage, the wiring harness or main switch is faulty.

| | | |
|---|---|---|
| Voltage (Lead terminal - Chassis) | Main switch key at **"PREHEAT"** | Approx. battery voltage |
| | Main switch key at **"START"** | Approx. battery voltage |

(1) Wiring Lead (Positive) (2) Glow Plug

W1018667

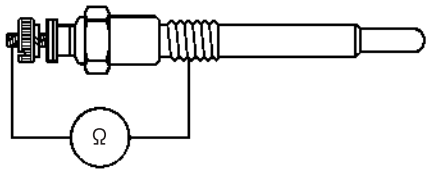

T12630EL00901

**Glow Plug Continuity**

1. Disconnect the lead from the glow plugs.
2. Measure the resistance with an ohmmeter between the glow plug terminal and the chassis.
3. If 0 ohm is indicated, the screw at the tip of the glow plug and the housing are short-circuited.
4. If the factory specification is not indicated, the glow plug is faulty.

| | | |
|---|---|---|
| Glow plug resistance | Factory spec. | Approx. 0.9 Ω |

W1018992

## (E) Safety Switch

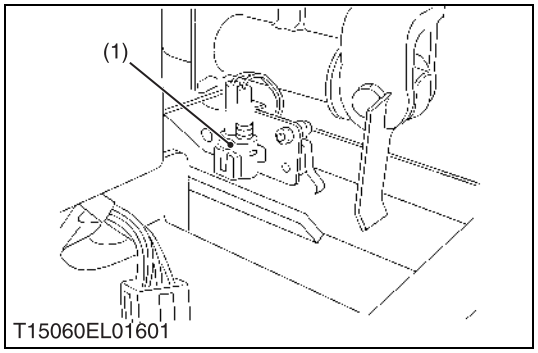

T15060EL01601

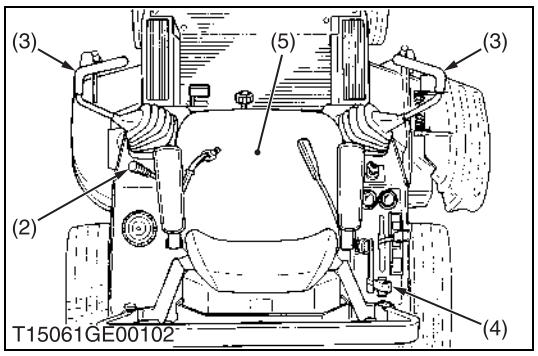

T15061GE00102

**Safety Switch Continuity**

1. Remove the safety switch leads.
2. Connect the circuit tester to the safety switch leads.
3. Measure the resistance between leads.
4. If the safety switch is defective, replace it.

| | | |
|---|---|---|
| Resistance (Across switch terminal)<br>· Speed control lever<br>· PTO lever<br>· Operator seat | When switch push is pushed | 0 Ω |
| | When switch push is released | Infinity |

| | | |
|---|---|---|
| Resistance (Across switch terminal)<br>· Parking brake lever | When actuator is pushed | Infinity |
| | When actuator is released | 0 Ω |

(1) Safety Switch
(2) Parking Brake Lever
(3) Motion Control Lever
(4) PTO Lever
(5) Operator Seat

W1019187

## (F) Fuel Pump

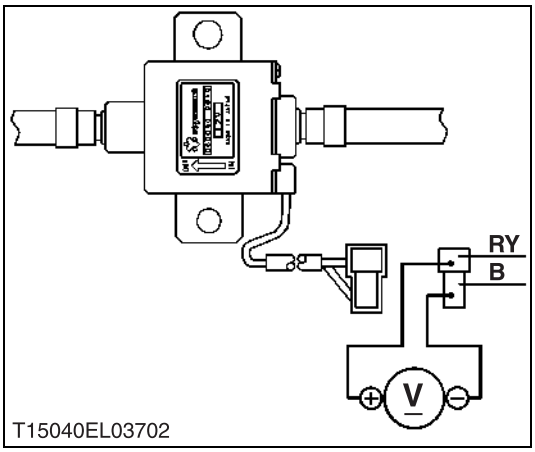


**Connector Voltage**

1. Disconnect the **2P** connector from the fuel pump.
2. Turn the main switch key to the **"ON"** position, and measure the voltage with a voltmeter between the connector terminals.
3. If the voltage differs from the battery voltage, the wiring harness or main switch is faulty.

| | | |
|---|---|---|
| Voltage | Between connector terminals | Approx. battery voltage |

W1019413

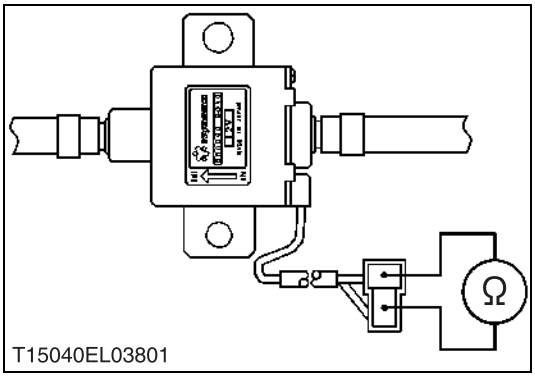


**Fuel Pump Continuity**

1. Disconnect the **2P** connector from the fuel pump.
2. Check the continuity between the connector terminals with an ohmmeter.
3. If it does not conduct, the fuel pump is faulty.

W1019534

## (G) Engine Stop Solenoid

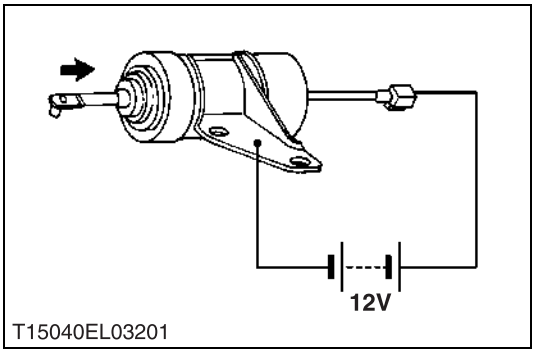


**Engine Stop Solenoid Test**

1. Disconnect the connector from the engine stop solenoid.
2. Remove the engine stop solenoid from the engine.
3. Connect the jumper leads from the battery positive terminal to the connector, and from the battery negative terminal to the engine stop solenoid body.
4. If the solenoid plunger is not attracted, the engine stop solenoid is faulty.

(1) White (2) Black

W1019658

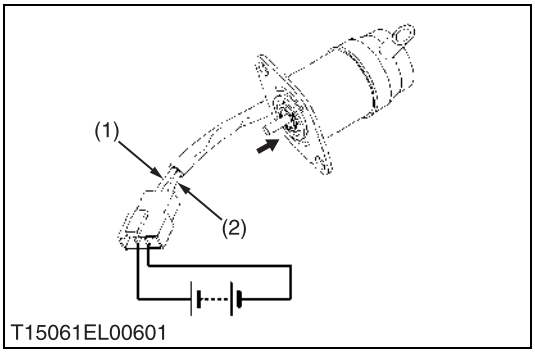

## (2) Disassembling and Assembling

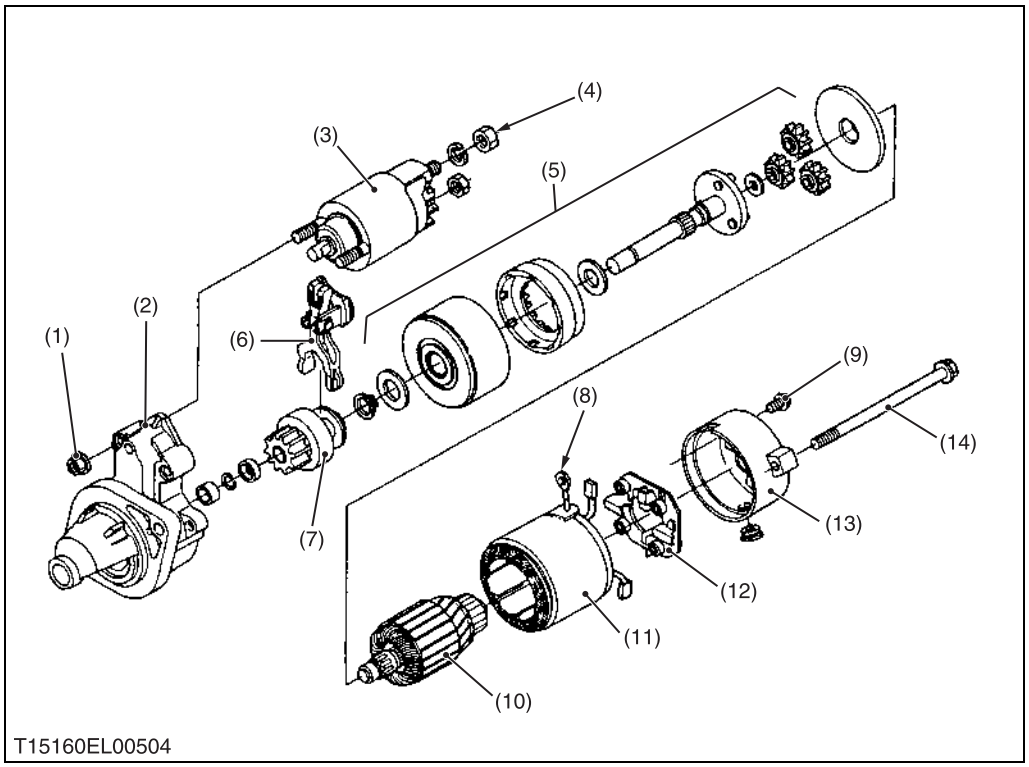


(1) Magnetic Switch Mounting Nut
(2) Housing
(3) Magnetic Switch
(4) **C** Terminal Nut
(5) Shaft Assembly
(6) Drive Lever
(7) Overrunning Clutch
(8) Connecting Lead
(9) Mounting Screw
(10) Armature
(11) Yoke
(12) Brush Holder
(13) Rear End Holder
(14) Through Bolt

W1019204

1. Unscrew the **C** terminal nut (4), and disconnect the connecting lead (8).
2. Unscrew the magnetic switch mounting nuts (1), and remove the magnetic switch (3) from the housing (2).
3. Unscrew the through bolts (14) and mounting screw (9), and remove the rear end frame (13).
4. Remove the brush from the brush holder while holding the spring up.
5. Remove the brush holder (12).
6. Draw out the armature (10) and yoke (11) from the housing.
7. Draw out the shaft assembly (5) with the drive leverr (6) and overrunning clutch (7) from the housing.

## (3) Servicing

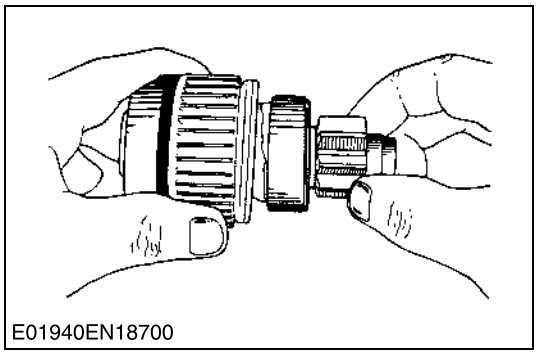


**Overrunning Clutch**

1. Inspect the pinion for wear or damage.
2. If there is any defect, replace the overrunning clutch assembly.
3. Check that the pinion turns freely and smoothly in the overrunning direction and does not slip in the cranking direction.
4. If the pinion slips or does not rotate in the both directions, replace the overrunning clutch assembly.

W1022548

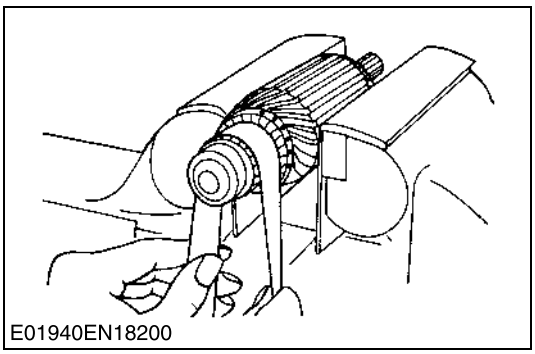
E01940EN18200

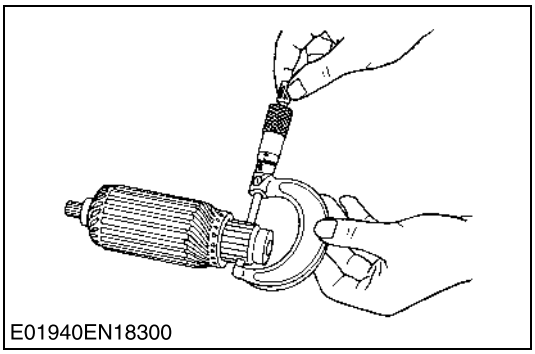
E01940EN18300

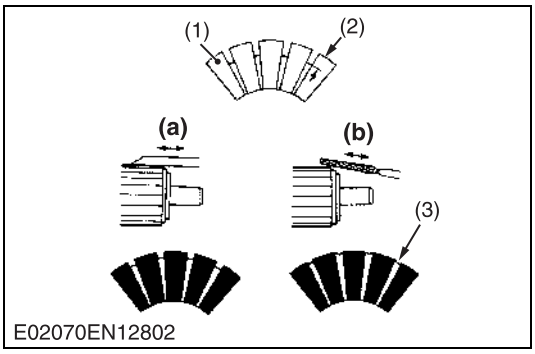

E02070EN12802

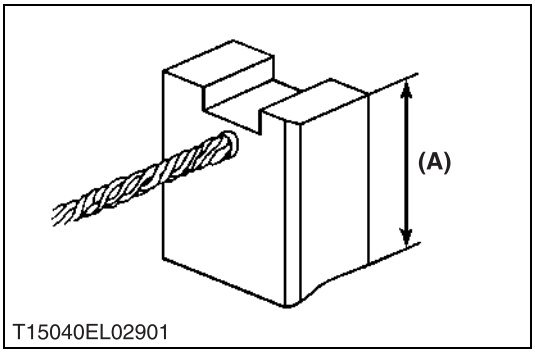

T15040EL02901

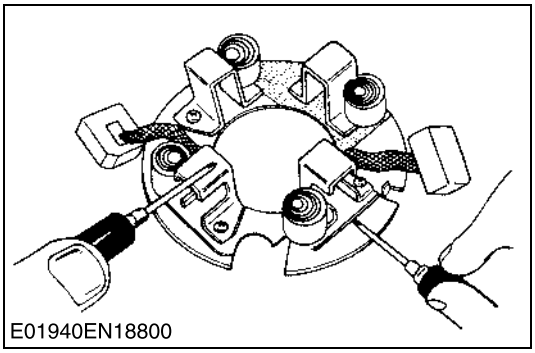
E01940EN18800

## Commutator and Mica

1. Check the contact face of the commutator for wear, and grind the commutator with emery paper if it is slightly worn.
2. Measure the commutator O.D. with an outside micrometer at several points.
3. If the minimum O.D. is less than the allowable limit, replace the armature.
4. If the difference of the O.D.'s exceeds the allowable limit, correct the commutator on a lathe to the factory specification.
5. Measure the mica undercut.
6. If the undercut is less than the allowable limit, correct it with a saw blade and chamfer the segment edges.

| | | |
|---|---|---|
| Commutator O.D. | Factory spec. | 30.0 mm<br>1.181 in. |
| | Allowable limit | 29.0 mm<br>1.142 in. |

| | | |
|---|---|---|
| Difference of O.D.'s | Factory spec. | Less than 0.02 mm<br>Less than 0.0008 in. |
| | Allowable limit | 0.05 mm<br>0.0020 in. |

| | | |
|---|---|---|
| Mica undercut | Factory spec. | 0.50 to 0.80 mm<br>0.0197 to 0.0315 in. |
| | Allowable limit | 0.20 mm<br>0.0079 in. |

(1) Segment
(2) Undercut
(3) Mica

**(a) Correct**
**(b) Incorrect**

W1022696

## Brush Wear

1. If the contact face of the brush is dirty or dusty, clean it with emery paper.
2. Measure the brush length **(A)** with vernier calipers.
3. If the length is less than the allowable limit, replace the yoke assembly and brush holder.

| | | |
|---|---|---|
| Brush length **(A)** | Factory spec. | 14.0 mm<br>0.551 in. |
| | Allowable limit | 9.0 mm<br>0.354 in. |

W1022961

## Brush Holder

1. Check the continuity across the brush holder and the holder support with an ohmmeter.
2. If it conducts, replace the brush holder.

W1023089

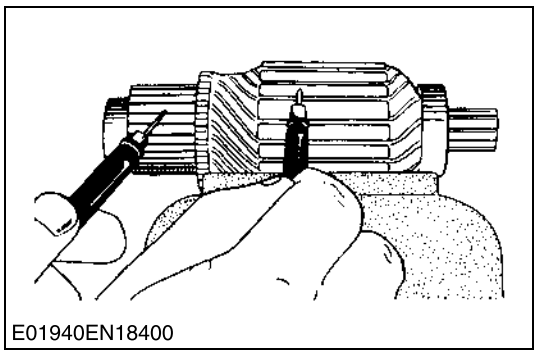
E01940EN18400

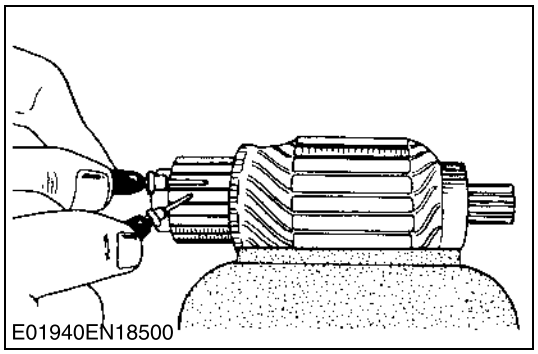
E01940EN18500

**Armature Coil**

1. Check the continuity across the commutator and armature coil core with an ohmmeter.
2. If it conducts, replace the armature.
3. Check the continuity across the segments of the commutaor with an ohmmeter.
4. If it does not conduct, replace the armature.

W1023212

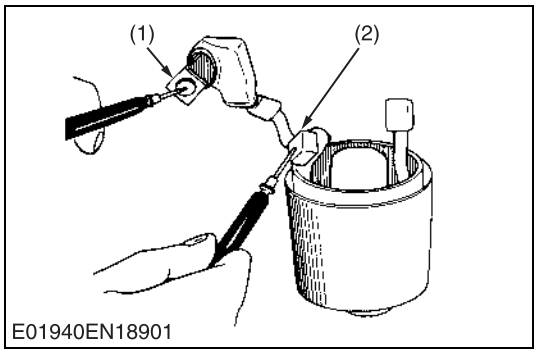

E01940EN18901

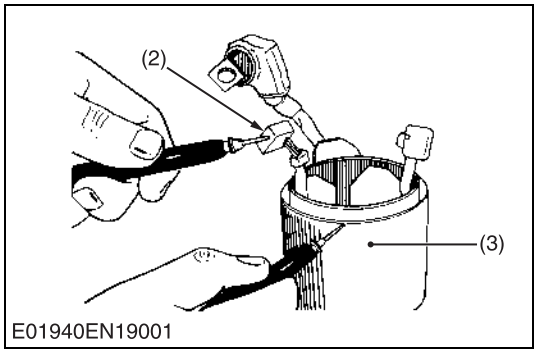

E01940EN19001

**Field Coil**

1. Check the continuity across the lead (1) and brush (2) with an ohmmeter.
2. If it does not conduct, replace the yoke assembly.
3. Check the continuity across the brush (2) and yoke (3) with an ohmmeter.
4. If it conducts, replace the yoke assembly.

(1) Lead
(2) Brush
(3) Yoke

W1023312

# [3] CHARGING SYSTEM

## (1) Checking

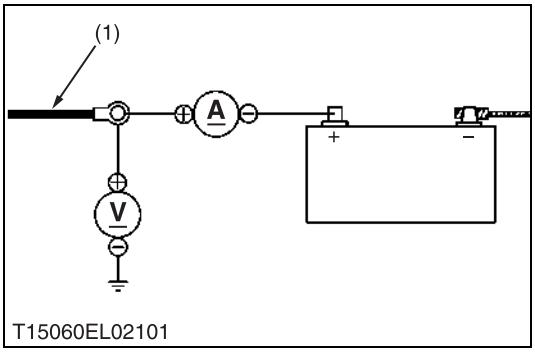

T15060EL02101

**Battery Charging Current**

1. After starting the engine, disconnect the battery positive cord (+), and connect an ammeter and voltmeter. Then switch on all electrical loads (such as head lights) and measure the charging current.

■ **NOTE**
- **Connect an ammeter only after starting the engine.**
- **When the electrical loads is considerably low or the battery is fully charged, the specified reading may not be obtained.**

| | | |
|---|---|---|
| Current | Factory spec. | 14 to 15 A |
| Voltage | | 14 to 15 V |
| Dynamo speed | | 5200 rpm |

(1) Battery Positive Cord

W1023448

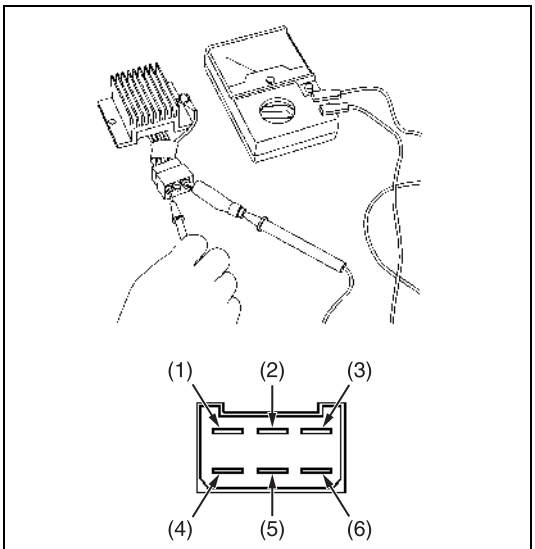

T15060EL02201

**Continuity across Regulator's Terminals**

1. Remove the regulator coupler.
2. Check with a tester whether the regulator is in optimum condition or not.

■ **Check Table**

■ **NOTE**
- **Type to use a high-resistance tester as far as possible.**
- **The judgement should be as below table. "ON" if the indicator moves, otherwise "OFF".**

| Tester + terminal / Tester – terminal | | Cord colors | | | | | |
|---|---|---|---|---|---|---|---|
| | | Blue | Black | Blue | Green | Yellow | Red |
| Cord colors | Blue | | OFF | **ON** | **ON** | **ON** | ON |
| | Black | **ON** | | **ON** | **ON** | **ON** | ON |
| | Blue | **ON** | OFF | | **ON** | **ON** | ON |
| | Green | OFF | OFF | OFF | | OFF | OFF |
| | Yellow | OFF | OFF | OFF | OFF | | OFF |
| | Red | **ON** | OFF | **ON** | **ON** | **ON** | |

(1) Blue
(2) Black
(3) Blue
(4) Green
(5) Yellow
(6) Red

W1023600

## (2) Disassembling and Assembling

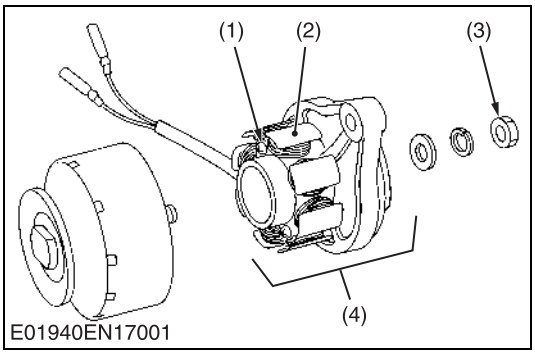

E01940EN17001

**Stator**

1. Remove the nut (3) and separate the stator comp. (4).
2. Unscrew the screws (1) and remove the stator (2).

**(When reassembling)**

| | | |
|---|---|---|
| Tightening torque | Nut | 39.2 to 44.1 N·m<br>4.0 to 4.5 kgf·m<br>28.9 to 32.5 ft-lbs |

(1) Screw
(2) Stator
(3) Nut
(4) Stator Comp.

W1024139

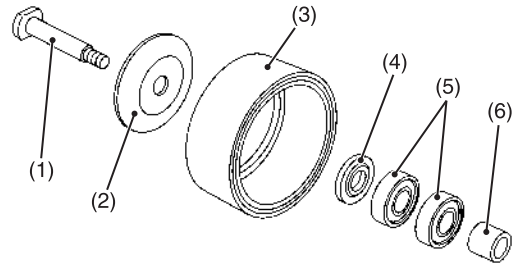

E01940EN17101

**Rotor**

1. Tap out the shaft (1) from the rotor (3).

**(When reassembling)**

- Take care the direction of the collar (4), the flat side should face to the pulley (2) side.

(1) Shaft
(2) Pulley
(3) Rotor
(4) Collar
(5) Bearings
(6) Collar

W1024281

## (3) Servicing

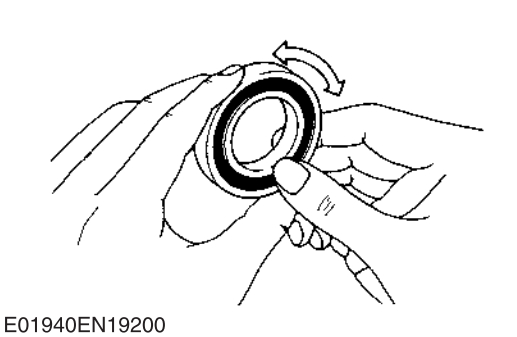
E01940EN19200

**Bearing**

1. Check the bearing for smooth rotation.
2. If it does not rotate smoothly, replace it.

W1024489

# [4] LIGHTING SYSTEM

## (1) Checking

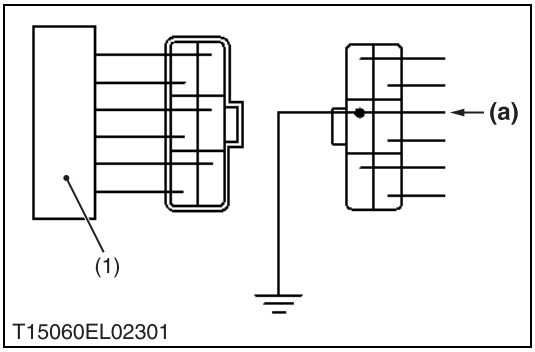


**Charge Lamp (Charging Circuit)**

1. Remove the under panel.
2. Disconnect the **6P** connector from the regulator after turning the main switch **OFF**.
3. Turn the main switch **ON** and connect a jumper lead from the wiring harness connector terminal (Black) to the chassis.
4. If the charge lamp does not light, the wiring harness or fuse is faulty.

(1) Regulator **(a) From Charge Lamp**

W1024567

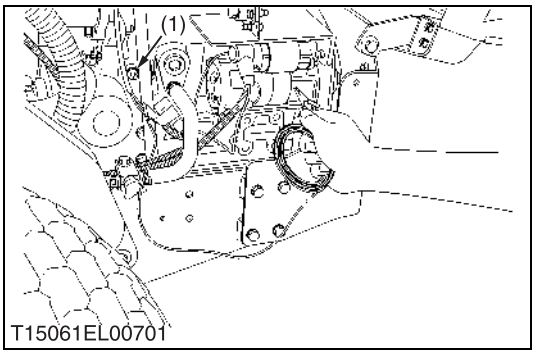


**Engine Oil Pressure Lamp**

1. Disconnect the lead from the engine oil pressure switch after turning the main switch **OFF**.
2. Turn the main switch **ON** and connect a jumper lead from the lead to the chassis.
3. If the engine oil pressure indicator lamp does not light, the wiring harness is faulty.

(1) Engine Oil Pressure Switch **(a) From Oil Pressure Lamp**

W1024686

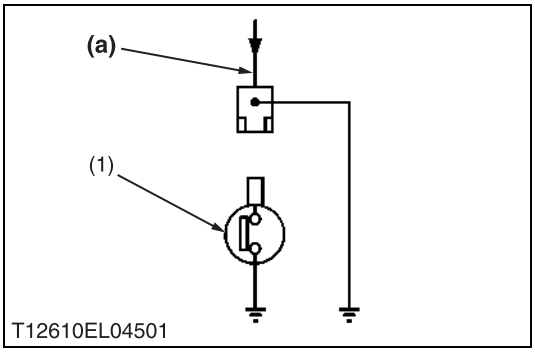


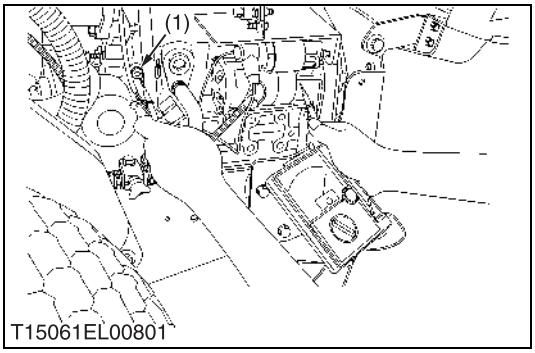


**Engine Oil Pressure Switch Continuity**

1. Measure the resistance with an ohmmeter across the switch terminal and the chassis.
2. If 0 ohm is not indicated in the normal state, the switch is faulty.
3. If infinity is not indicated at pressure over 4.9 kPa (0.5 kgf/cm$^2$, 7 psi), the switch is faulty.

| | | |
|---|---|---|
| Resistance (Switch terminal - Chassis) | In normal state | 0 Ω |
| | At pressure over approx. 4.9 kPa (0.5 kgf/cm$^2$, 7 psi) | Infinity |

(1) Engine Oil Pressure Switch

W1024804

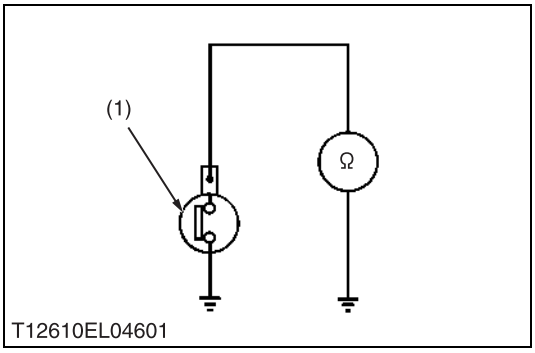

# [5] GAUGES

## (1) Checking

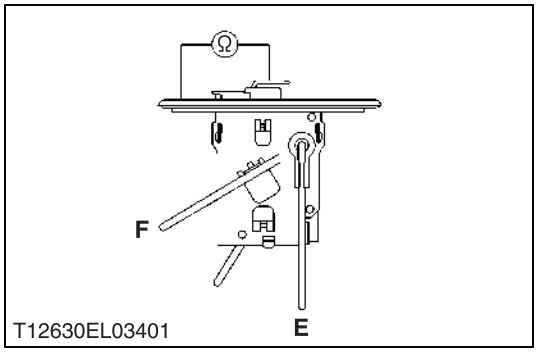


### Fuel Level Sensor

**1) Sensor Continuity**

1. Remove the fuel level sensor from the fuel tank.
2. Measure the resistance with an ohmmeter across the sensor terminal and its body.
3. If the reference values are not indicated, the sensor is faulty.

| | | | |
|---|---|---|---|
| Resistance (Sensor terminal - its body) | Reference value | Float at upper-most position | 1 to 5 Ω |
| | | Float at lower-most position | 103 to 117 Ω |

W1025023

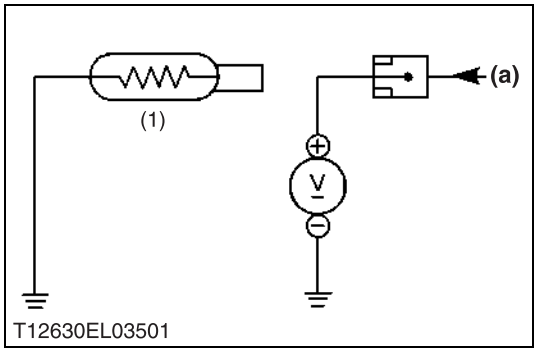


### Coolant Temperature Sensor

**1) Lead Terminal Voltage**

1. Disconnect the lead from the coolant temperature sensor after turning the main switch **OFF**.
2. Turn the main switch **ON** and measure the voltage with a voltmeter across the lead terminal and the chassis.
   If the voltage differs from the battery voltage, the wiring harness, fuse or coolant temperature gauge is faulty.

| | | |
|---|---|---|
| Voltage | Lead terminal - Chassis | Approx. battery voltage |

**2) Sensor Continuity**

1. Measure the resistances with an ohmmeter across the sensor terminal and the chassis.
2. If the reference value is not indicated, the sensor is faulty.

| | | |
|---|---|---|
| Resistance (Sensor terminal - Chassis) | Reference value | Approx. 16.1 Ω at 120 °C (248 °F)<br>Approx. 27.4 Ω at 100 °C (212 °F)<br>Approx. 51.9 Ω at 80 °C (176 °F)<br>Approx. 153.9 Ω at 50 °C (122 °F) |

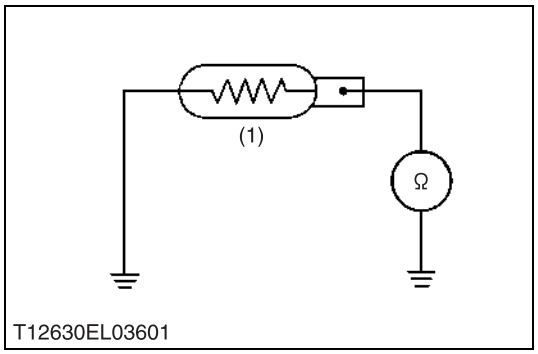


(1) Coolant Temperature Sensor
**(a) From Temperature Gauge**

W1025197

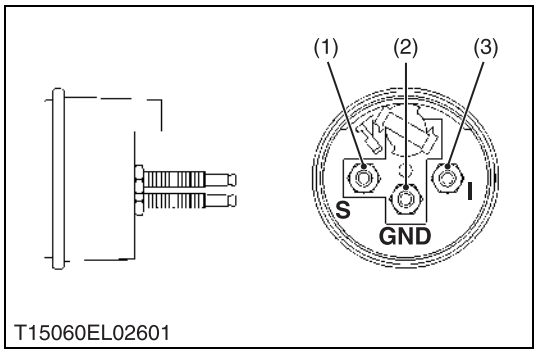


### Fuel Gauge and Coolant Temperature Gauge Operation

1. Remove the under panel.
2. Turn the main switch to **ON** position. Measure the voltage with a voltmeter across the **I** terminal (3) and **GND** terminal (2) of the gauge.
3. If approx. battery voltage is indicated, the ignition and ground lead connections are good.
4. Turn the main switch to **OFF** position. Connect a jumper lead between **S** terminal (1) and **GND** terminal (2) of the gauge.
5. Turn the main switch to **ON** position. If the gauge resisters a full scale reading under those conditions, the gauge is good. If less than full scale reading is indicated, the gauge is defective and should be replaced.

(1) **S** Terminal
(2) **GND** Terminal
(3) **I** Terminal

W1025568

# 6 ROTARY MOWER

# MECHANISM

## CONTENTS

# 1. POWER TRANSMISSION

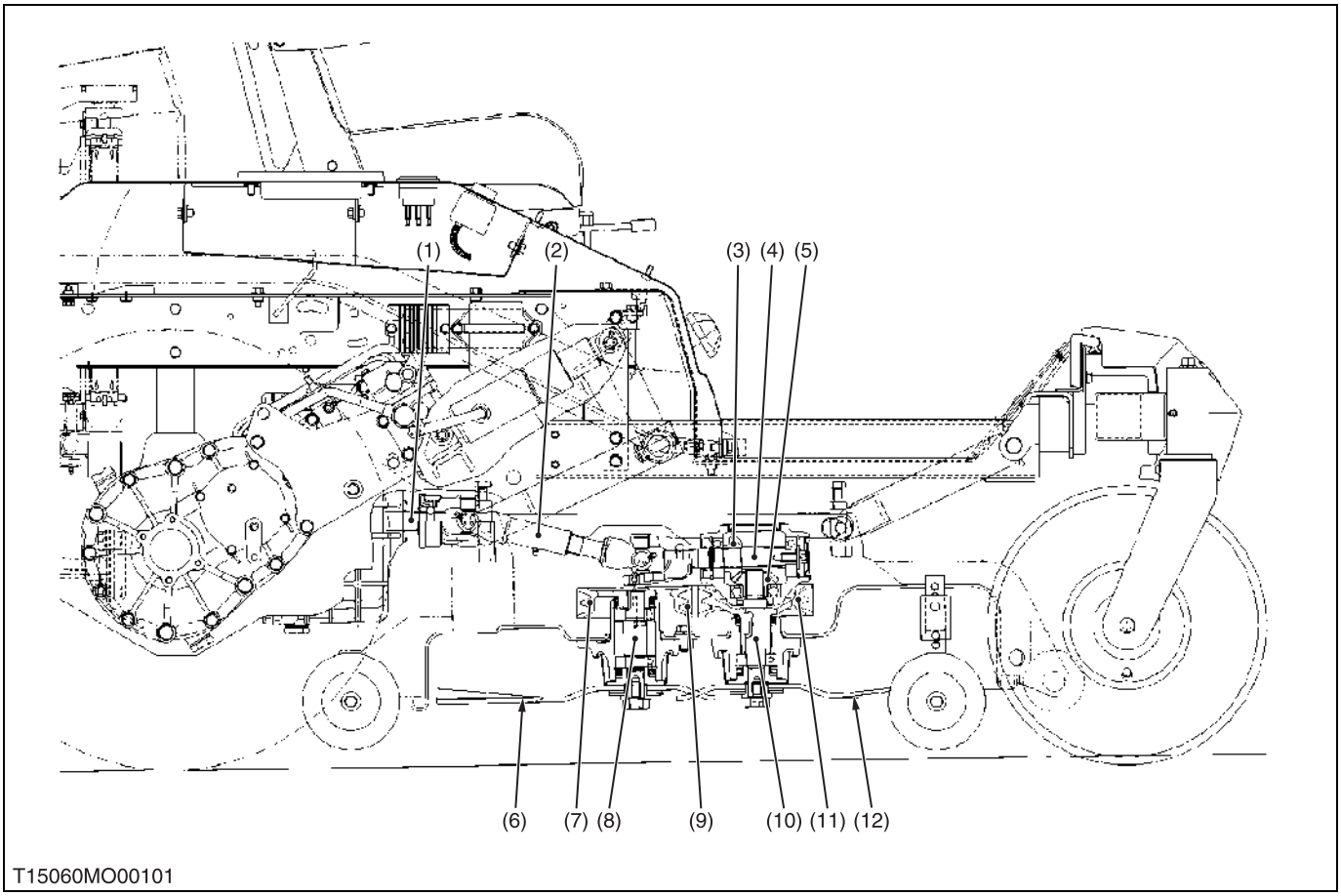


(1) PTO Shaft
(2) Universal Joint
(3) 19T Bevel Gear (RCK54-18Z · RCK60-21Z)) 18T Bevel Gear (RCK72-28Z)
(4) Pinion Shaft
(5) 16T Bevel Gear (RCK54-18Z · RCK60-21Z)) 17T Bevel Gear (RCK72-28Z)
(6) Outer Blade
(7) Outer Pulley
(8) Blade Shaft
(9) Mower Belt
(10) Bevel Gear Shaft
(11) Center Pulley
(12) Center Blade

The power is transmitted from mid-PTO to blades as follows.

■ **Center Blade**

PTO Shaft (1) → Universal Joint (2) → Pinion Shaft (4) → Bevel Gear (3) → Bevel Gear (5) → Bevel Gear Shaft (10) → Center Blade (12)

■ **Outer Blade**

PTO Shaft (1) → Universal Joint (2) → Pinion Shaft (4) → Bevel Gear (3) → Bevel Gear (5) → Bevel Gear Shaft (10) → Center Pulley (11) → Mower Belt (9) → Outer Pulley (7) → Blade Shaft (8) → Outer Blade (6)

# 2. LIFTING MECHANISM

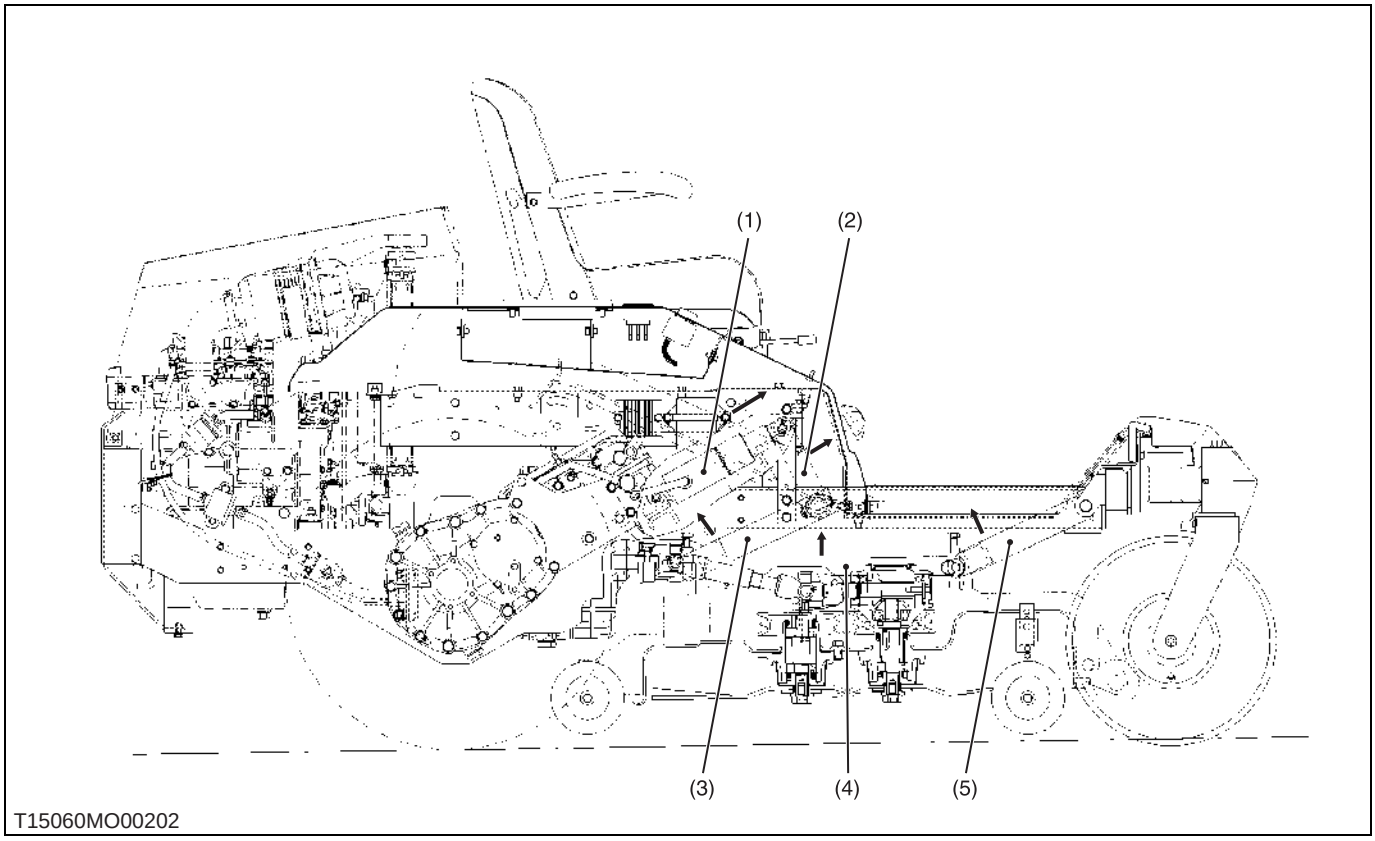


(1) Lift Cylinder
(2) Lift Shaft
(3) Rear Arm
(4) Horizon Plate
(5) Front Arm

The lifting of mower is performed by the hydraulic system on the machine.

For avoiding danger, the mower should be kept lifting when traveling. When the position control lever is moved to **"LIFT"** position, the rear arm (3) are risen with lift shaft (2) by the oil pressure of hydraulic system.

Therefore, front arm (5) connected with the horizon plate (4) are lifted at the same time.

As this link system is a parallel linkage, the mower can be kept parallel at every position.

**CAUTION**

- **Never operate mower in transport position.**

# SERVICING

## CONTENTS

# 1. TROUBLESHOOTING

| Symptom | Probable Cause | Solution | Reference Page |
|---|---|---|---|
| **Blade Does Not Turn** | • PTO system malfunctioning<br>• Broken mower belt | Check transmission<br>Replace mower belt | –<br>G-37 |
| **Blade Speed Is Slow** | • Loosen mower belt<br>• Clogged grass<br>• Flattened out or worn cup washer<br>• Engine rpm too low | Replace mower belt or tension spring<br>Remove grass<br>Replace cup washer<br>Mow at full throttle, check and reset engine rpm | G-37<br>–<br>6-S6<br>– |
| **Cutting Is Poor** | • Worn or bent mower blade<br>• Loosen mower blade screw<br>• Cutting height improper<br>• Ground speed too fast<br>• Low wheel inflation<br>• Anti-scalp rollers not adjusted correctly | Sharpen or replace mower blade<br>Retighten mower blade screw<br>Adjust cutting height<br>Slow-down<br>Add air to correct<br>Adjust anti-scalp rollers | 6-S6<br>6-S6<br>6-S4<br>–<br>–<br>6-S5 |
| **Mower Is Not Lifted** | • Broken linkage system<br>• Trouble of hydraulic system | Replace linkage system<br>Check hydraulic system | –<br>– |

W1014322

# 2. SERVICING SPECIFICATIONS

| Item | | Factory Specification | Allowable Limit |
|---|---|---|---|
| Pinion Shaft (without Mower Belt) | Turning Force | Less than 117.7 N<br>12.0 kgf<br>26.5 lbs | – |
| | Turning Torque | Less than 1.47 N·m<br>0.15 kgf·m<br>1.08 ft-lbs | – |
| Bevel Gears in Gear Box | Backlash | 0.1 to 0.2 mm<br>0.0039 to 0.0078 in. | 0.4 mm<br>0.157 in. |
| Front Tip of Blade to Rear Tip of Blade | Difference | 0 to 6.0 mm<br>0 to 0.24 in. | – |
| Left Tip of Blade to Right Tip of Blade | Difference | Less than 3 mm<br>0.1181 in. | – |

W1013874

# 3. TIGHTENING TORQUES

Tightening torques of screws, bolts and nuts on the table below are especially specified.
(For general use screws, bolts and nuts: See page G-9.)

| Item | N·m | kgf·m | ft-lbs |
|---|---|---|---|
| Mower blade screw | 98.1 to 117.7 | 10.0 to 12.0 | 72.3 to 86.8 |
| Gear box mounting screw | | | |
| Standard type / Reamer type | 77.6 to 90.2 | 8.0 to 9.2 | 57.1 to 66.5 |
| Center pulley holder screw | | | |
| Standard type / Reamer type | 77.6 to 90.2 | 8.0 to 9.2 | 57.1 to 66.5 |
| Outer pulley mounting nut | 166.7 to 186.3 | 17.0 to 19.0 | 123.0 to 137.4 |
| Pulley holder mounting screw | 77.4 to 90.2 | 7.9 to 9.2 | 57.1 to 66.5 |

W1012736

# 4. CHECKING, DISASSEMBLING AND ASSEMBLING

## [1] CHECKING AND ADJUSTING

### Adjusting Anti-scalp Rollers

■ **IMPORTANT**

- **The flattest cut can be achieved by having the anti-scalp rollers adjusted off the ground.**
  **Check anti-scalp roller adjustments each time the mower deck cutting height is changed.**
  **It is recommended that all the anti-scalp rollers be kept off the ground to minimize scuffing.**

1. Check the machine wheel pressure.
   Inflate wheels to the correct pressure. (See table below.)

| | Inflation Pressure |
|---|---|
| Front wheel | 207 kPa, 2.1 kgf/cm$^2$, 30 psi |
| Rear wheel | 140 kPa, 1.4 kgf/cm$^2$, 20 psi |

2. Start the engine.
3. Raise up the mower deck to the transport position.
   (Also the top end of the lift.)
4. Turn the cutting height control dial to adjust height.
5. Lower the mower deck.

W1020280

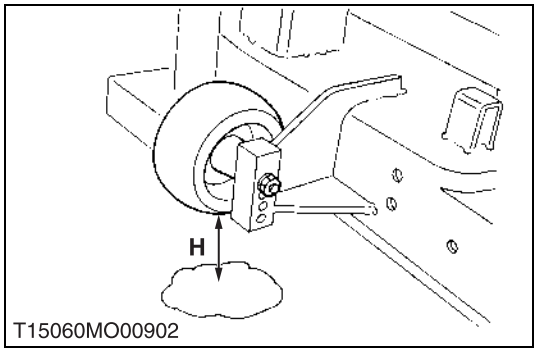

T15060MO00902

■ **Rear side anti-scalp roller**

6. Adjust height **H** of the rear side anti-scalp roller to one of four positions to approximately 19 mm (0.75 in.) between rollers and ground. Adjust both side rollers to the same height.
7. Install the roller with attaching hardware.

W1020905

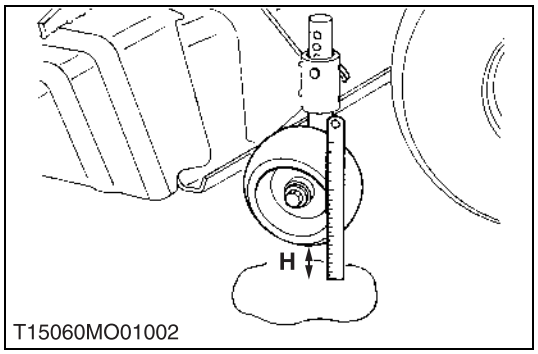

T15060MO01002

■ **Front side anti-scalp roller**

8. Adjust height **H** of the front side anti-scalp roller to one of seven positions to approximately 19 mm (0.75 in.) between rollers and ground. Adjust both side rollers to the same height.
9. Install the roller with attaching hardware.

W1020763

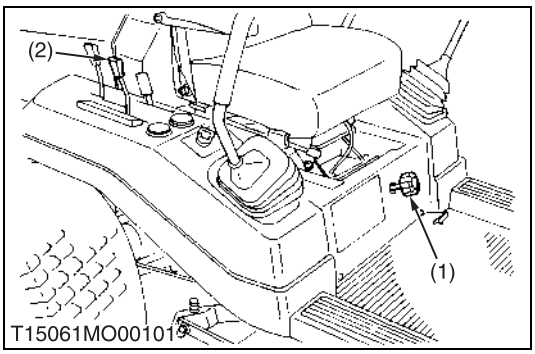


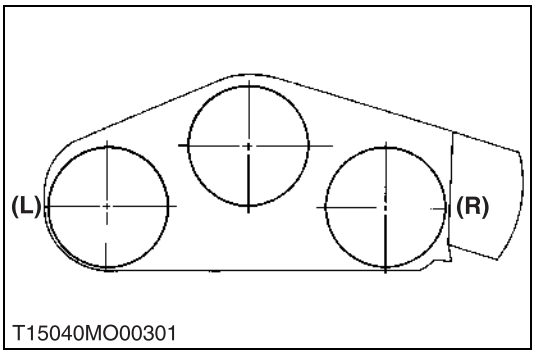


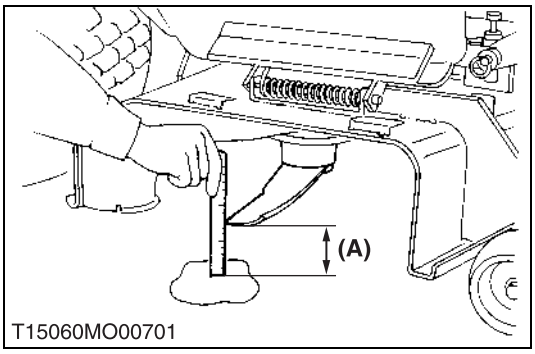


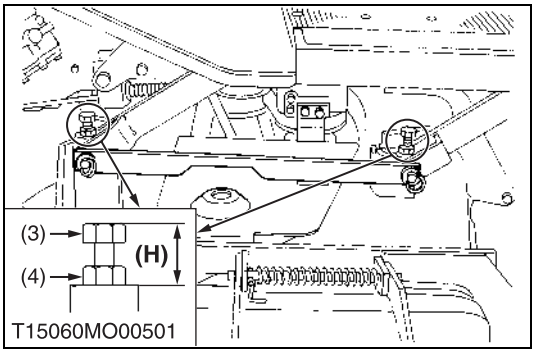


## Adjusting Left and Right Cutting Height

1. Wheel pressure must be correct.
2. Raise up the mower deck to the transport position. (Also the top end).
3. Turn the cutting height set dial (1) to the 3 in. cutting height position.
4. Place 51 mm (2 in.) height wood blocks under each side of the mower deck.
   Anti-scalp rollers must not rest on the wood block.
5. Lower the mower deck.
6. Position mower blade in the Side-to-Side position.
7. Loosen the lock nuts (4) of the right side of the machine.
8. Adjust the cutting height fine tuning bolts (3) to set 80 mm (3 1/8 in.) height.
   Front and rear side bolts must be adjusted.
9. Lock the nuts.
10. Adjust the left side equally.
11. Measure the heights of blade **(L)** and **(R)** from the ground surface and calculate the difference.
12. If the difference between left tip and right tip of blade is not within the factory specification, adjust the length of cutting height fine tuning bolt (3).

| | | |
|---|---|---|
| Difference ((**L**) - (**R**)) between left tip and right tip of blade | Factory spec. | Less than 3 mm<br>0.1181 in. |

(1) Cutting Height Control Dial
(2) Hydraulic Control Lever
(3) Cutting Height Fine Tuning Bolt
(4) Lock Nut

**(L) Left Blade Measurement Position**
**(R) Right Blade Measurement Position**
**(A) Blade Height**
**(H) Length of Cutting Height Fine Tuning Bolt**

W1011016

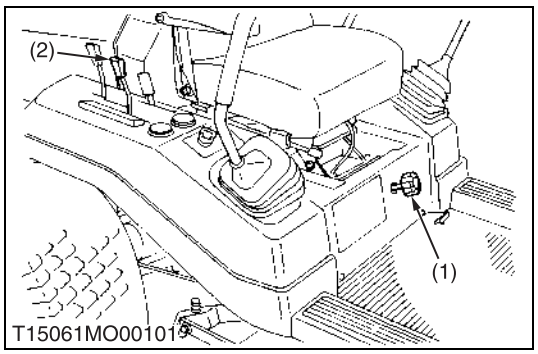


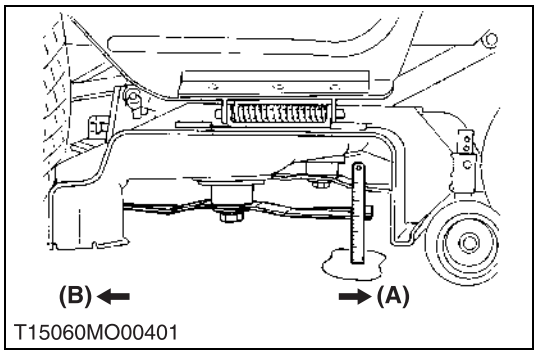


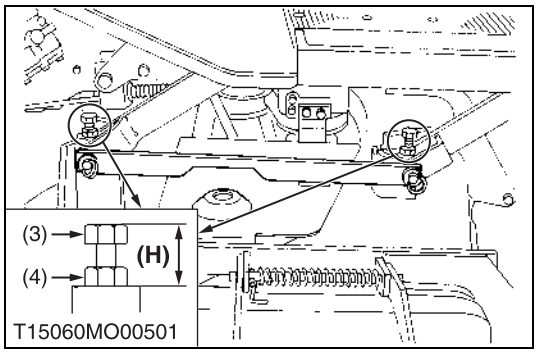


## Adjusting Front and Rear Cutting Height

1. Wheel pressure must be correct.
2. Raise up the mower deck to the transport position. (Also the top end).
3. Turn the cutting height set dial (1) to the 3 in. cutting height position.
4. Place 51 mm (2 in.) height wood blocks under each side of the mower deck.
   Anti-scalp rollers must not rest on the wood block.
5. Lower the mower deck.
6. Loosen the lock nuts (4) of the front side of the machine.
7. Adjust the cutting height fine tuning bolts (3) to set 80 mm (3 1/8 in.) height.
   Both front side bolts (3) must be adjusted.
8. Lock the nuts (4).
9. Adjust the other side equally.
10. Measure the heights of blade **(A)** and **(B)** from the ground surface and calculate the difference.
11. If the difference between front tip and rear tip of blade is not within the factory specification, adjust the length **H** of cutting height fine tuning bolt with lock nut (4). The height of rear blade tip **(B)** should be bigger than the front.

| | | |
|---|---|---|
| Difference (**(B)** - **(A)**) (**(B)** ≥ **(A)**) between front tip and rear tip of blade | Factory spec. | 0 to 6.0 mm<br>0 to 0.24 in. |

(1) Cutting Height Control Dial
(2) Hydraulic Control Lever
(3) Cutting Height Fine Tuning Bolt
(4) Lock Nut
**(H) Length of Cutting Height Fine Tuning Bolt**
**(A) Height of Blade Tip (Front)**
**(B) Height of Blade Tip (Rear)**

W1013248

# [2] DISASSEMBLING AND ASSEMBLING

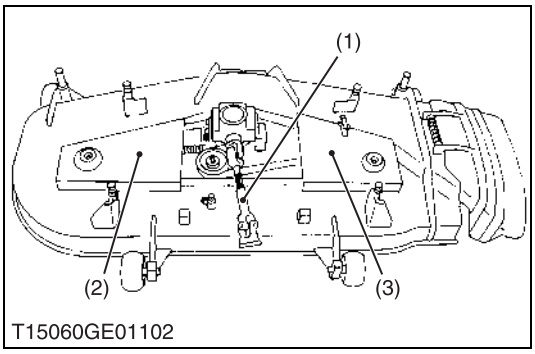

T15060GE01102

## Universal Joint and Belt Covers

1. Remove the universal joint (1).
2. Remove the left and right belt covers (2), (3).

(1) Universal Joint
(2) Belt Cover (Left)
(3) Belt Cover (Right)

W1012580

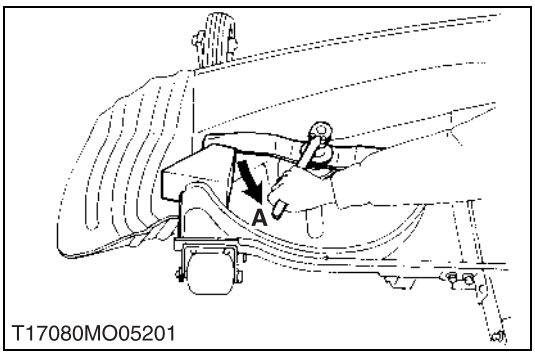

T17080MO05201

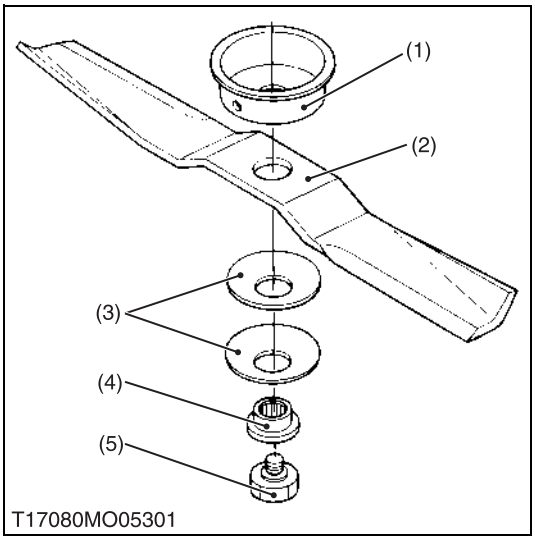

T17080MO05301

## Mower Blades (Center Blade and Outer Blades)

1. Turn over the mower.
2. Unscrew the mower blade screw (5), and remove the spline boss (4), two cup washers (3), mower blade (2) and dust cover (1).

■ **NOTE**

- **To remove the blade securely, wedge a block of wood between one blade and the mower deck in such position that it will hold the blade safely while loosing or tightening the blade screw.**

**(When reassembling)**

- Be sure to assemble the two cup washers between the mower blade and spline boss.

■ **IMPORTANT**

- **Make sure the cup washer is not flattened out or worn, causing blade to slip easily.**
  **Replace two cup washers if either is damaged.**

| | | |
|---|---|---|
| Tightening torque | Mower blade screw | 98.1 to 117.7 N·m<br>10.0 to 12.0 kgf·m<br>72.3 to 86.8 ft-lbs |

(1) Dust Cover
(2) Mower Blade
(3) Cup Washer
(4) Spline Boss
(5) Mower Blade Screw

**A : Loosen**

W1012667

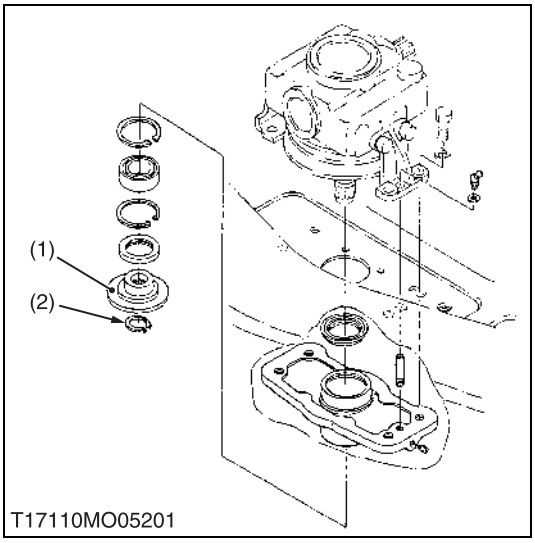

T17110MO05201

## Blade Boss

1. Remove the external snap ring (2).
2. Remove the blade boss (1).

(1) Blade Boss
(2) External Snap Ring

W1012871

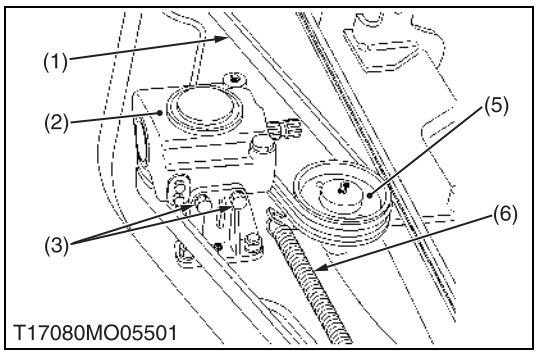

T17080MO05501

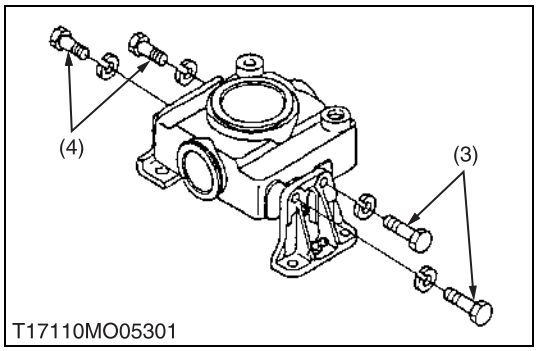

T17110MO05301

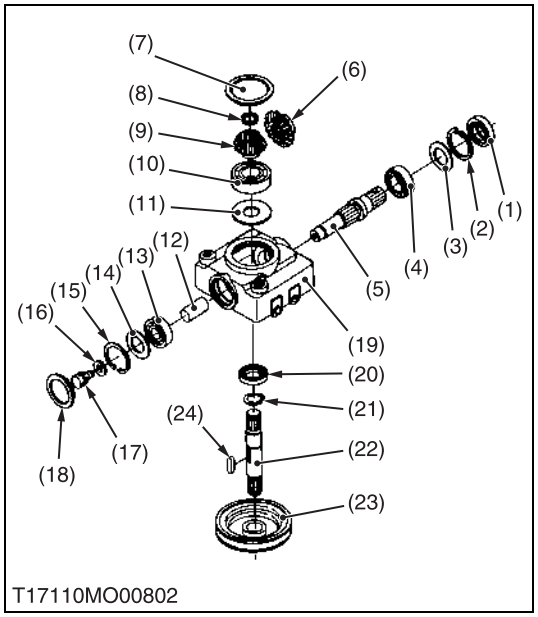

T17110MO00802

## Gear Box and Mower Belt

1. Turn over the mower.
2. Remove the mower belt (1) from the tension pulley (5).
3. Unscrew the left and right gear box mounting screws (3), (4) and remove the gear box (2) from the mower deck.

**(When reassembling)**

- Install the reamer screws (3) at their original positions as shown in the figure.

| | | |
|---|---|---|
| Tightening torque | Gear box mounting screw | 77.6 to 90.2 N·m<br>8.0 to 9.2 kgf·m<br>57.1 to 66.5 ft-lbs |

(1) Mower Belt
(2) Gear Box
(3) Gear Box Mounting Screw (Reamer Screw)
(4) Gear Box Mounting Screw
(5) Tension Pulley
(6) Tension Spring

W1012961

## Disassembling Gear Box

1. Unscrew the drain plug, and drain the gear box oil.
2. Remove the center pulley (23) with a puller, and remove the feather key (24) on the bevel gear shaft.
3. Remove the gear box caps (7), (18).
4. Remove the oil seal (1), external snap ring (2) and shim (3).
5. Remove the screw (17), washer (16) and tap out the pinion shaft (5) with ball bearing (4).
6. Remove the bevel gear (6) and pinion shaft collar (12).
7. Remove the internal snap ring (15) and shims (14).
8. Remove the ball bearing (13).
9. Remove the external snap ring (8), and draw out the bevel gear shaft (22).
10. Remove the bevel gear (9) with ball bearing (10).

**(When reassembling)**

- Replace the oil seals (1), (20) and gear box caps (7), (18) with new ones.
- Check the backlash and turning torque.
  If not proper, adjust with the shims (3), (11) and (14). (See page 6-S11, 12.)

(1) Oil Seal
(2) Internal Snap Ring
(3) Shim
(4) Ball Bearing
(5) Pinion Shaft
(6) 19T Bevel Gear (RCK54-18Z · RCK60-21Z) 18T Bevel Gear (RCK72-28Z)
(7) Gear Box Cap
(8) External Snap Ring
(9) 16T Bevel Gear (RCK54-18Z · RCK60-21Z) 17T Bevel Gear (RCK72-28Z)
(10) Ball Bearing
(11) Shim
(12) Pinion Shaft Collar
(13) Ball Bearing
(14) Shim
(15) Internal Snap Ring
(16) Washer
(17) Screw
(18) Gear Box Cap
(19) Gear Box
(20) Oil Seal
(21) External Snap Ring
(22) Bevel Gear Shaft
(23) Center Pulley
(24) Feather Key

W1018511

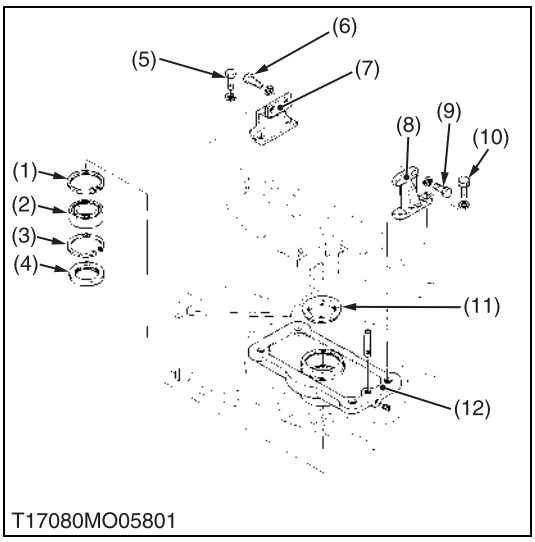


**Center Pulley Holder**

1. Unscrew the center pulley holder screws (5) and reamer screws (10).
2. Remove the upper oil seal (11) and lower oil seal (4).
3. Remove the internal snap ring (3) and ball bearing (2).

**(When reassembling)**

- Replace the oil seals (4), (11) with new ones.
- Install the reamer screws (10) at their original positions as shown in the figure.

■ **NOTE**

- **When reassembling the center pulley holder (12), gear box and gear box stays (7), (8), screw the all screws by hand temporary.**
- **Tighten the screws in the order as below, to prevent the incline the gear box.**
- **Tighten the reamer screws (9) to the gear box first, then tighten the reamer screws (10) to the center pulley holder (12) with specified torque.**
- **Tighten the gear box screws (6) to the gear box, then tighten the center pulley holder screws (5) with specified torque.**
- **See page 6-S8 for tightening torque of gear box screw.**

| | | |
|---|---|---|
| Tightening torque | Center pulley holder screw (Standard type / Reamer type) | 77.6 to 90.2 N·m<br>8.0 to 9.2 kgf·m<br>57.1 to 65.1 ft-lbs |

(1) Internal Snap Ring
(2) Ball Bearing
(3) Internal Snap Ring
(4) Oil Seal
(5) Center Pulley Holder Screw
(6) Gear Box Screw
(7) Gear Box Stay RH
(8) Gear Box Stay LH
(9) Gear Box Reamer Screw
(10) Center Pulley Holder Reamer Screw
(11) Oil Seal
(12) Center Pulley Holder

W1013720

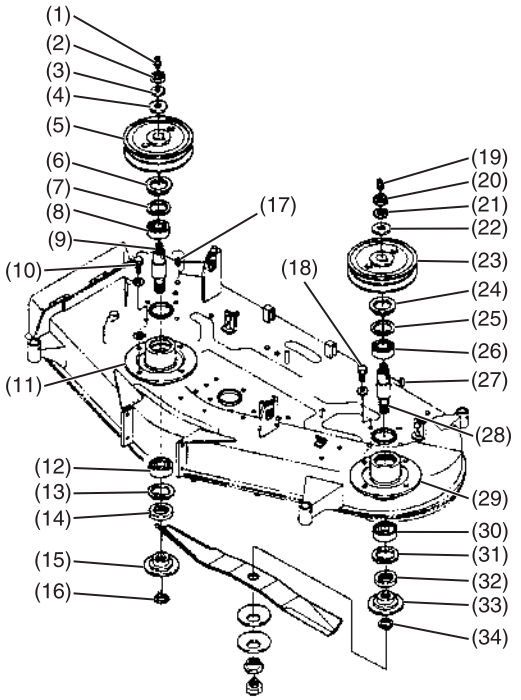

T15080MO00101

## Outer Pulley and Blade Shaft

1. Unscrew the outer pulley mounting nut (20), and remove the outer pulley (23) and feather key (27).
2. Unscrew the pulley holder mounting screws (18), and separate the left pulley holder (29) from the mower deck.
3. Remove the external snap ring (34) on the left blade shaft (28).
4. Remove the spline boss (33) and oil seal (32).
5. Remove the internal snap ring (31) and tap out the left blade shaft (28) with the ball bearings (26), (30), taking care not to damage the grease nipple (19).
6. Remove the oil seal (24) and internal snap ring (25).
7. Remove the ball bearings (26), (30) from the blade shaft (28).
8. Remove the right pulley holder (11) and blade shaft (9) as above.

**(When reassembling)**

- Replace the oil seals (32), (24), (14) and (6) with new ones.

| | | |
|---|---|---|
| Tightening torque | Outer pulley mounting nut | 166.7 to 186.3 N·m<br>17.0 to 19.0 kgf·m<br>123.0 to 137.4 ft-lbs |
| | Pulley holder mounting screw | 77.4 to 90.2 N·m<br>7.9 to 9.2 kgf·m<br>57.1 to 66.5 ft-lbs |

(1) Grease Nipple
(2) Outer Pulley Mounting Nut
(3) Spring Washer
(4) Plain Washer
(5) Outer Pulley (Right)
(6) Oil Seal
(7) Internal Snap Ring
(8) Ball Bearing
(9) Blade Shaft (Right)
(10) Pulley Holder Mounting Screw
(11) Pulley Holder (Left)
(12) Ball Bearing
(13) Internal Snap Ring
(14) Oil Seal
(15) Spline Boss
(16) External Snap Ring
(17) Feather Key
(18) Pulley Holder Mounting Screw
(19) Grease Nipple
(20) Outer Pulley Mounting Nut
(21) Spring Washer
(22) Plain Washer
(23) Outer Pulley (Left)
(24) Oil Seal
(25) Internal Snap Ring
(26) Ball Bearing
(27) Feather Key
(28) Blade Shaft (Left)
(29) Pulley Holder (Left)
(30) Ball Bearing
(31) Internal Snap Ring
(32) Oil Seal
(33) Spline Boss
(34) External Snap Ring

W1013387

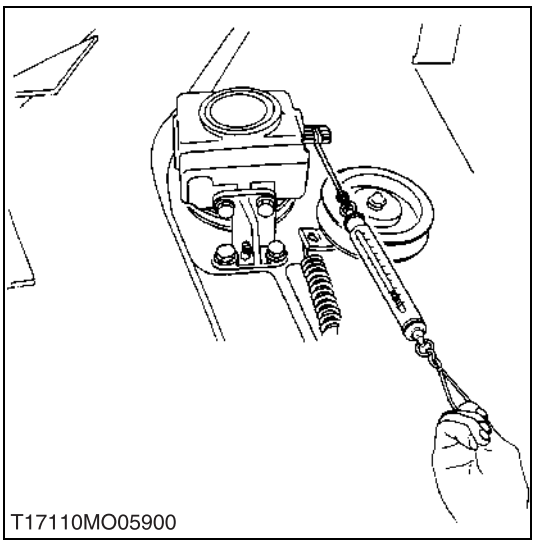
T17110MO05900

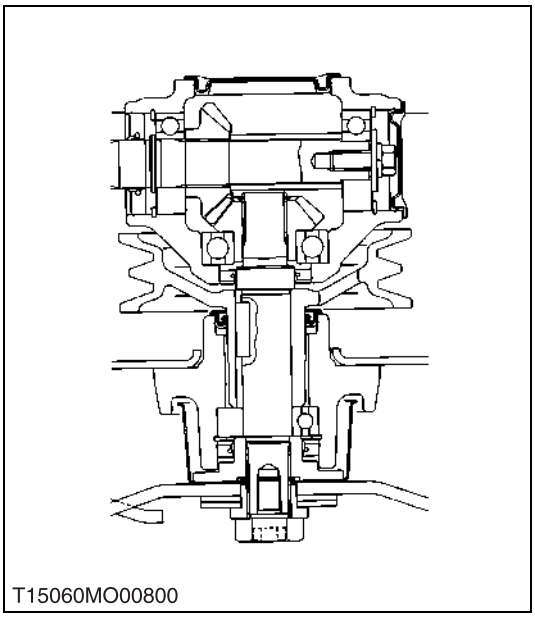
T15060MO00800

**Turning Torque of Pinion Shaft**

1. Remove the mower belt, and reassemble the gear box to the mower deck.
2. Wind a string around the pinion shaft and set a spring balance (or push-pull gauge) to the tip of the string, and then slowly pull the spring balance horizontally to measure the turning force.
3. If the measurement exceeds the factory specification, check the bearings and gears.

| | | |
|---|---|---|
| Turning force | Factory spec. | Less than 117.7 N<br>12.0 kgf<br>26.5 lbs |

| | | |
|---|---|---|
| Turning torque | Factory spec. | Less than 1.47 N·m<br>0.15 kgf·m<br>1.08 ft-lbs |

W1019836

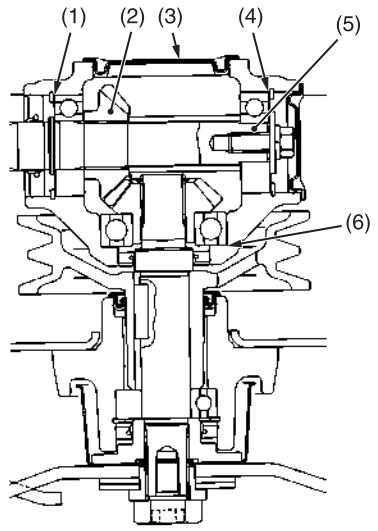

T15060MO00802

**Backlash between Bevel Gears**

1. Remove the gear box cap (3).
2. Place fuses the 19T bevel gear (2) on the pinion shaft (5).
3. Turn the pinion shaft.
4. Take out the fuses, and measure the thickness of fuses with an outside micrometer. (Backlash equal thickness of fuse)
5. If the backlash exceeds the allowable limit, adjust with shims (1), (4), (6).

| | | |
|---|---|---|
| Backlash between bevel gears | Factory spec. | 0.13 to 0.25 mm<br>0.0051 to 0.0098 in. |
| | Allowable limit | 0.40 mm<br>0.0157 in. |

**(Reference)**

- Thickness of adjusting shims (1), (4) : 0.2 mm (0.0079 in.)
  0.3 mm (0.0118 in.)
- Thickness of adjusting shims (6) : 0.1 mm (0.0039 in.)
  0.2 mm (0.0079 in.)

(1) Shim
(2) 19T Bevel Gear
(3) Gear Box Cap
(4) Shim
(5) Pinion Shaft
(6) Shim

W1020126

# 7 ZD25F

# TO THE READER

How to use ZD25F WSM (97897-15220).

Attached please find the WSM for ZD25F, which please use together with WSM (No. 97897-15061) already issued for ZD18(F), ZD21(F) and ZD28(F).

For your information, the WSM of ZD25F has been prepared newly by adding the information contained in the Sections of specifications, dimensions, general and engine.

For those customers who do not have the WSM (No. 97897-15061) for ZD18(F), ZD21(F) and ZD28(F), it is necessary for them to order it separately.

If the No. 97897-15062 is ordered, a combined version of base 15061 (bound together) with the ZD25F (No. 97897-15220) will be dispatched to you.

**August 2005**

# CONTENTS

# SPECIFICATIONS

| Model | | | ZD25F |
|---|---|---|---|
| Maximum gross power | | | 18.7 kW (25 HP)*1 |
| Engine | Model | | D1005-E2-ZD |
| | Type | | Indirect injection, vertical, water cooled, 4-cycle diesel engine |
| | Number of cylinders | | 3 |
| | Bore and stroke | | 76.0 × 73.6 mm (2.99 × 2.90 in.) |
| | Total displacement | | 1001 $cm^3$ (61.1 cu.in.) |
| | Rated revolution | | 3000 rpm |
| | Combustion chamber | | Spherical type (E-TVCS) |
| | Fuel injection pump | | Bosch MD type mini pump |
| | Governor | | Centrifugal ball mechanical governor |
| | Injection nozzle | | Throttle type |
| | Injection timing | | 0.30 to 0.33 rad (17° to 19°) before T.D.C. |
| | Injection order | | 1-2-3 |
| | Injection pressure | | 13.73 MPa (140 $kgf/cm^2$, 1990 psi) |
| | Lubricating system | | Forced lubrication by gear pump |
| | Cooling system | | Pressurized radiator, forced circulation with water pump |
| | Lubricating oil | | API Service classification CC or CD, Below 0 °C (32 °F) : SAE 10W or 10W-30, 0 to 25 °C (32 °F to 77 ° F) : SAE 20 or 10W-30, Above 25 °C (77 °F) : SAE 30 or 10W-30 |
| | Starting system | | Electric starter (12 V, 1.1 kW) |
| | Battery | | 51 R (12 V, 450 CCA) |
| | Fuel | | No. 2-D Diesel fuel (ASTM D975)<br>[No. 1-D diesel fuel, if temperature is below – 10 °C (14 °F)] |
| Capacities | Fuel tank | | 30 L (5.8 U.S.gals., 4.8 Imp.gals.) |
| | Engine crankcase | | 3.4 L (3.6 U.S.qts., 3.0 Imp.qts.) |
| | Engine coolant | | 4.0 L (4.2 U.S.qts., 3.5 Imp.qts.) |
| | Recovery tank | | 0.25 L (0.26 U.S.qts., 0.22 Imp.qts.) |
| | Transmission (Including HST and cylinder) | | 4.0 L (4.2 U.S.qts., 3.5 Imp.qts.)*2 |
| | Rear axle gear case | | 1.8 L (1.9 U.S.qts., 1.6 Imp.qts.)*2 each |
| | Mower gear case oil | | 0.40 L (0.42 U.S.qts., 0.35 Imp.qts.) |
| Tires | Front | | 15 × 6.0-6 (4PR) Rib |
| | Rear | | 24 × 12.0-12 (4PR) Turf |
| Travelling speeds | Forward | | 0 to 15.0 km/h (0 to 9.3 mph)*3 |
| | Reverse | | 0 to 8.3 km/h (0 to 5.2 mph)*3 |
| Dimensions | Overall length | | 2260 mm (90.0 in.) |
| | Overall width (Without mower) | | 1328 mm (52.3 in.) |
| | Overall height | With ROPS upright | 1895 mm (74.6 in.) |
| | | With ROPS folded | 1455 mm (57.3 in.) |
| | Wheel base | | 1365 mm (53.7 in.) |
| | Treads | Front | 1070 mm (42.1 in.) |
| | | Rear | 1080 mm (42.5 in.) |

**NOTE:** *1 Manufacturer's estimate
*2 Oil amount when the oil level is at the upper level.
*3 At 3000 engine rpm

| Model | | ZD25F |
|---|---|---|
| Weight (With mower deck) | Fabricated deck | 753 kg (1660 lbs) / With 60" mower deck |
| PTO | | Shaft drive KUBOTA 10 tooth in spline (2530 rpm) |
| PTO clutch | | Wet multi discs |
| Revolution (PTO speed) | | 1 speed (2540 rpm at 3000 engine rpm) |
| PTO brake | | Wet single disc |
| Steering | | 2-Hand levers |
| Transmission | | 2-Hydrostatic transmission with gear |
| Brake | | Internal expanding shoe / Foot applied, hand released |

The company reserves the right to change the specifications without notice.

W1030228

| Model | | | RCK60P-28Z*1 / RCK60-28Z |
|---|---|---|---|
| Mower | Suitable machine | | ZD25F |
| | Mounting method | | Quick joint, parallel linkage |
| | Adjustment of cutting height | | Dial gauge |
| | Cutting width mm (in.) | | 1524 (60.0) |
| | Cutting height mm (in.) | | 25 to 127 (1.0 to 5.0) |
| | Weight (Approx.) kg (lbs) | | 145 (320) |
| | Blade spindle speed r/s (rpm) | | 53.7 (3220)*2 |
| | Blade tip velocity m/s (fpm) | | 88.4 (17400)*2 |
| | Blade length mm (in.) | | 523 (20.6) |
| | Number of blades | | 3 |
| | Dimensions | Total length mm (in.) | 1025 (40.35) |
| | | Total width mm (in.) | 1845 (72.6) |
| | | Total height mm (in.) | 300 (11.8) |
| | Discharge | | Right side |

**NOTE:** *1 Mower mode (P) means Fabricated deck type (Pro-mower)
*2 Engine Max rpm

The company reserves the right to change the specifications without notice.

W1029898

# DIMENSIONS

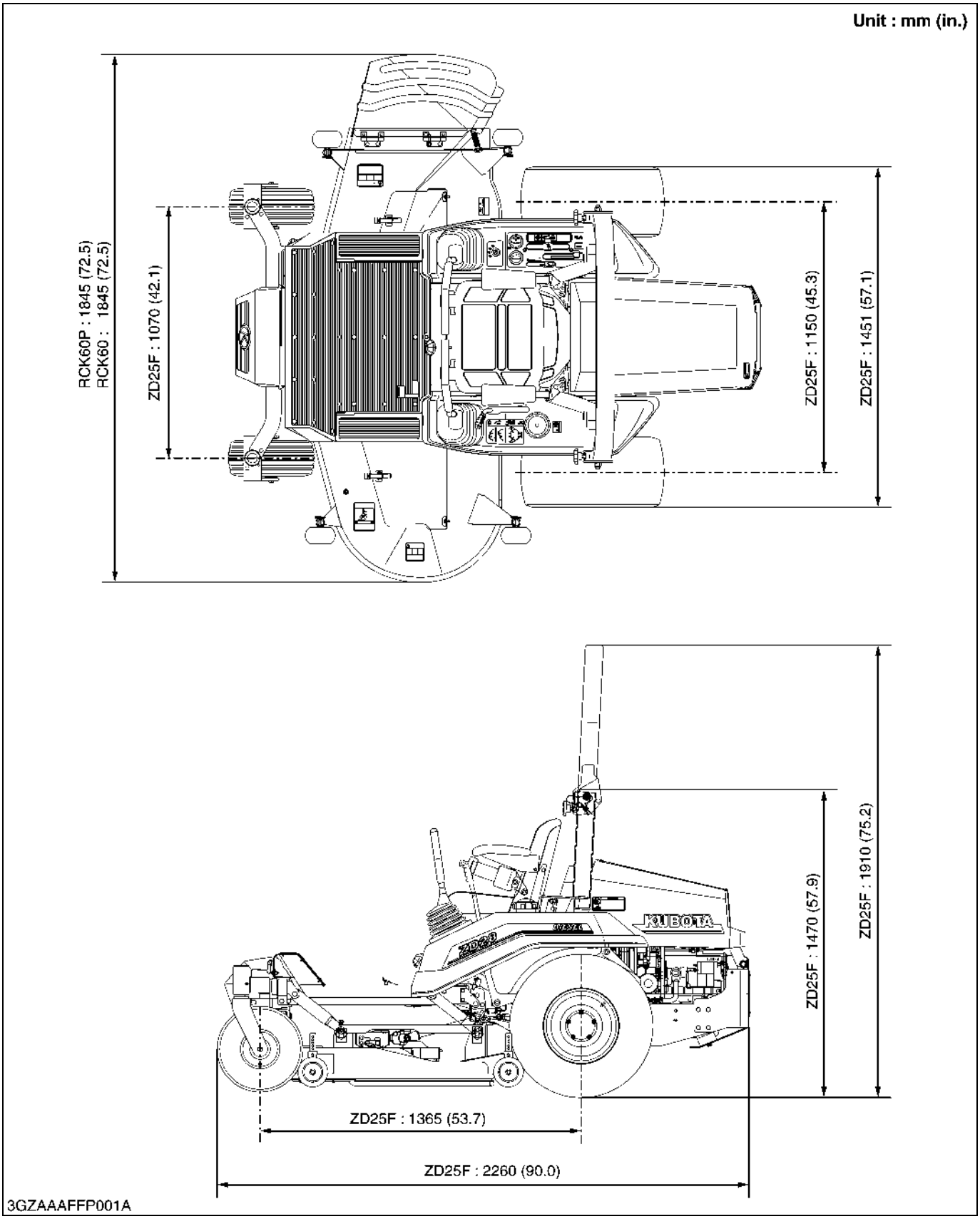
Unit : mm (in.)
RCK60P : 1845 (72.5)
RCK60 : 1845 (72.5)
ZD25F : 1070 (42.1)
ZD25F : 1150 (45.3)
ZD25F : 1451 (57.1)
ZD25F : 1470 (57.9)
ZD25F : 1910 (75.2)
ZD25F : 1365 (53.7)
ZD25F : 2260 (90.0)
KUBOTA
3GZAAAFFP001A

# 7-G GENERAL

# GENERAL

## CONTENTS

# 1. IDENTIFICATION

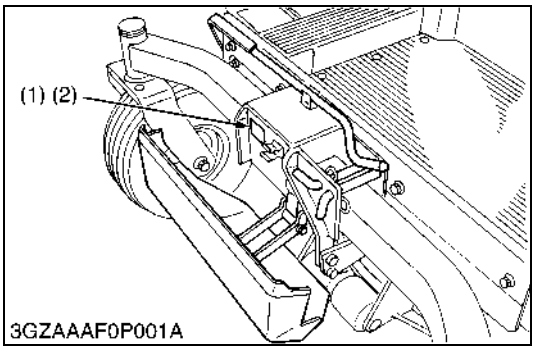


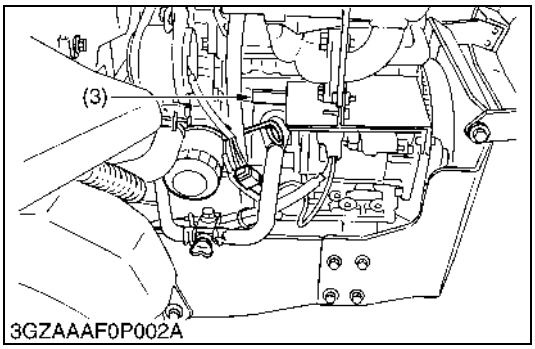


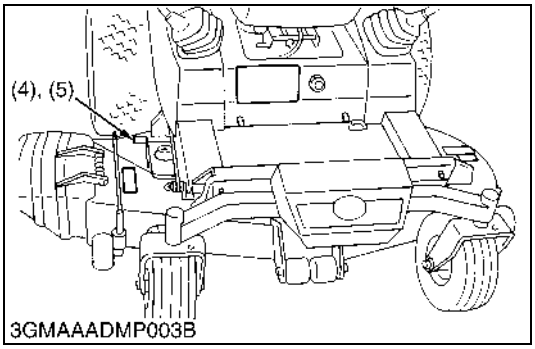


When contacting your local KUBOTA distributor, always specify engine serial number (3), machine serial number (2), mower serial number (4) and hour meter reading.

(1) Machine Identification Plate
(2) Machine Serial Number
(3) Engine Serial Number
(4) Mower Serial Number
(5) Mower Identification Plate

W1010714

# 2. GENERAL PRECAUTIONS

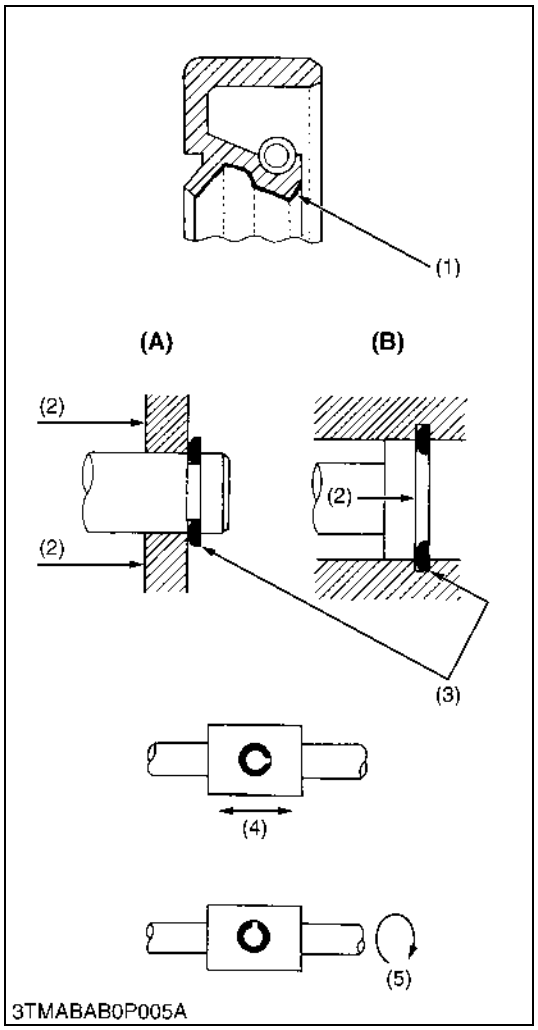


- During disassembly, carefully arrange removed parts in a clean area to prevent confusion later. Screws, bolts and nuts should be installed in their original position to prevent reassembly errors.
- When special tools are required, use KUBOTA genuine special tools. Special tools which are not frequently used should be made according to the drawings provided.
- Before disassembling or servicing electrical wires, always disconnect the ground cable from the battery first.
- Remove oil and dirt from parts before measuring.
- Use only KUBOTA genuine parts for parts replacement to maintain machine performance and to assure safety.
- Gaskets and O-rings must be replaced during reassembly. Apply grease to new O-rings or oil seals before assembling. See the figure left side.
- When reassembling external snap rings or internal snap rings, they must be positioned so that sharp edge faces against the direction from which a force is applied. See the figure left side.
- When inserting spring pins, their splits must face the direction from which a force is applied. See the figure left side.
- To prevent damage to the hydraulic system, use only specified fluid or equivalent.

(1) Grease
(2) Force
(3) Sharp Edge
(4) Axial Force
(5) Rotating Movement

**(A) External Snap Ring**
**(B) Internal Snap Ring**

W1010904

# 3. HANDLING PRECAUTIONS FOR ELECTRICAL PARTS AND WIRING

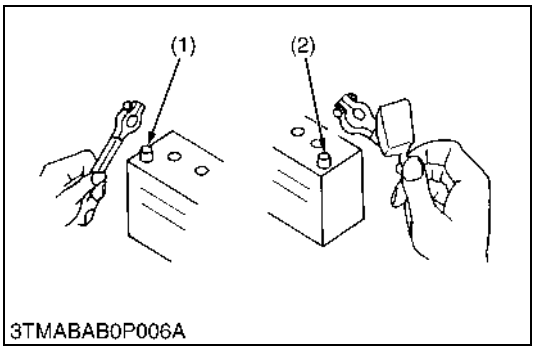


To ensure safety and prevent damage to the machine and surrounding equipment, heed the following precautions in handling electrical parts and wiring.

■ **IMPORTANT**

- **Check electrical wiring for damage and loosened connection every year. To this end, educate the customer to do his or her own check and at the same time recommend the dealer to perform periodic check for a fee.**
- **Do not attempt to modify or remodel any electrical parts and wiring.**
- **When removing the battery cables, disconnect the negative cable first. When installing the battery cables, connect the positive cable first.**

(1) Negative Terminal (2) Positive Terminal

W1011114

## [1] WIRING

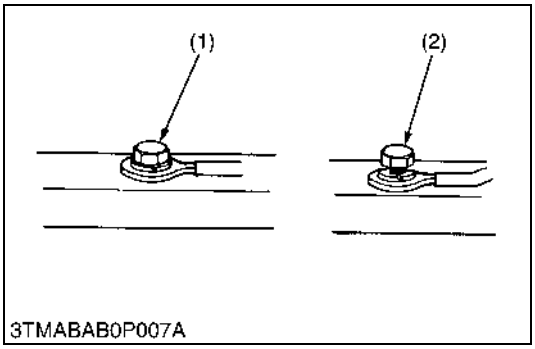


- Securely tighten wiring terminals.

(1) Correct (Securely tighten)
(2) Incorrect (Loosening leads to faulty contact)

W1011216

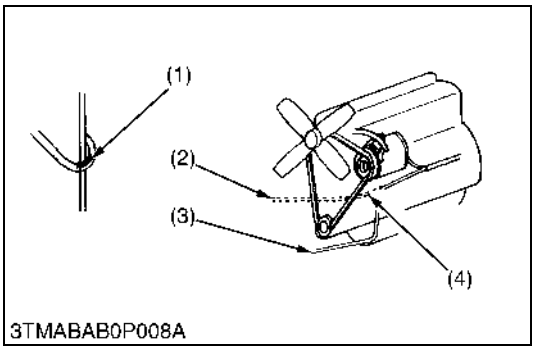


- Do not let wiring contact dangerous part.

(1) Dangerous Part
(2) Wiring (Incorrect)
(3) Wiring (Correct)
(4) Dangerous Part

W1011313

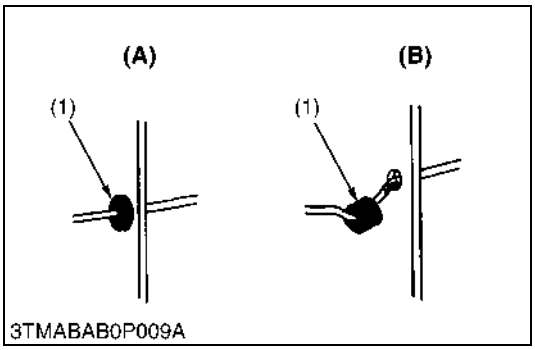


- Securely insert grommet.

(1) Grommet
**(A) Correct**
**(B) Incorrect**

W1011388

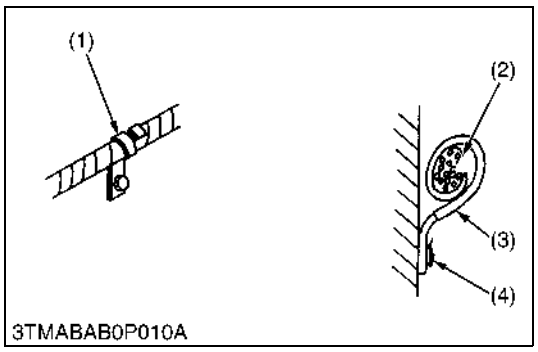


- Securely clamp, being careful not to damage wiring.

(1) Clamp
  • Wind Clamp Spirally
(2) Wire Harness
(3) Clamp
(4) Welding Dent

W1011458

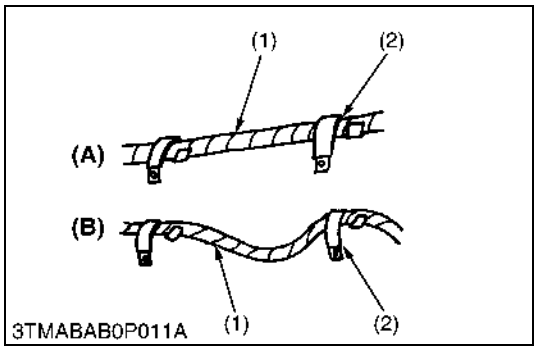


- Clamp wiring so that there is no twist, unnecessary sag, or excessive tension, except for movable part, where sag be required.

(1) Wiring
(2) Clamp
**(A) Correct**
**(B) Incorrect**

W1011587

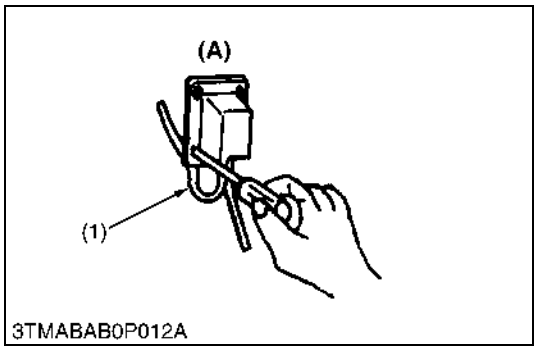


- In installing a part, take care not to get wiring caught by it.

(1) Wiring
**(A) Incorrect**

W1011670

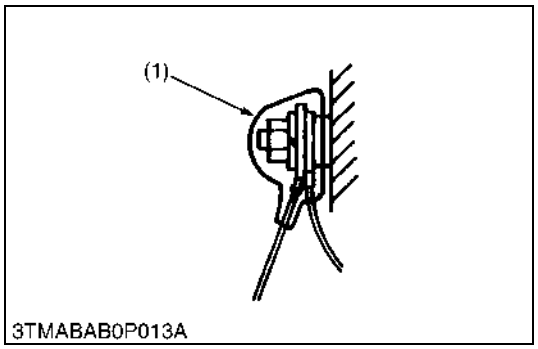


- After installing wiring, check protection of terminals and clamped condition of wiring, only connect battery.

(1) Cover
  • Securely Install Cover

W1011735

## [2] BATTERY

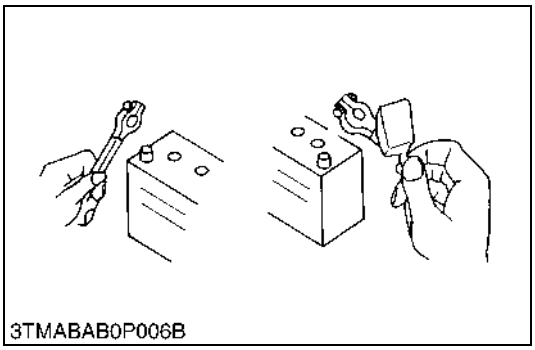
3TMABAB0P006B

- Take care not to confuse positive and negative terminal posts.
- When removing battery cables, disconnect negative cable first. When installing battery cables, check for polarity and connect positive cable first.
- Do not install any battery with capacity other than is specified (Ah).
- After connecting cables to battery terminal posts, apply high temperature grease to them and securely install terminal covers on them.
- Do not allow dirt and dust to collect on battery.

**CAUTION**

- **Take care not to let battery liquid spill on your skin and clothes. If contaminated, wash it off with water immediately.**
- **Before recharging the battery, remove it from the machine.**
- **Before recharging, remove cell caps.**
- **Do recharging in a well-ventilated place where there is no open flame nearby, as hydrogen gas and oxygen are formed.**

W1011816

## [3] FUSE

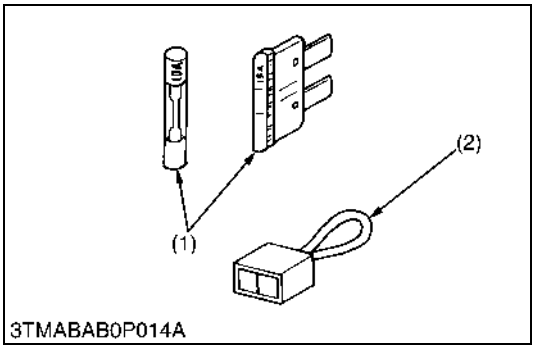

3TMABAB0P014A

- Use fuses with specified capacity.
  Neither too large or small capacity fuse is acceptable.
- Never use steel or copper wire in place of fuse.
- Do not install working light, radio set, etc. on machine which is not provided with reserve power supply.
- Do not install accessories if fuse capacity of reserve power supply is exceeded.

(1) Fuse (2) Slow Blow Fuse

W1012092

## [4] CONNECTOR

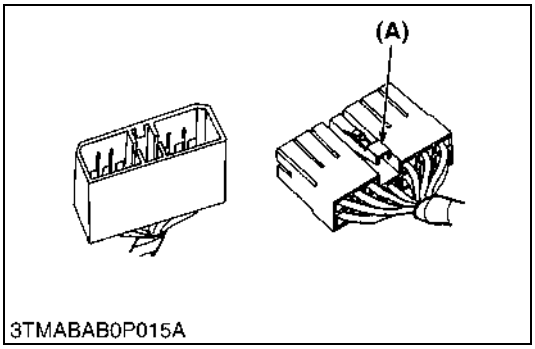

3TMABAB0P015A

- For connector with lock, push lock to separate.

**(A) Push**

W1012211

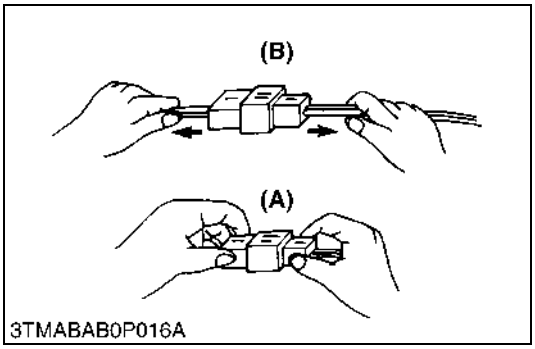

3TMABAB0P016A

- In separating connectors, do not pull wire harnesses.
- Hold connector bodies to separate.

**(A) Correct** **(B) Incorrect**

W1012272

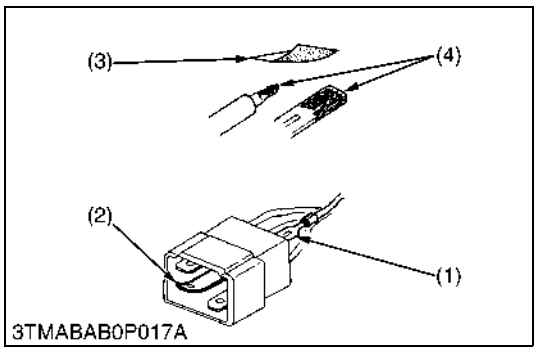


- Use sandpaper to remove rust from terminals.
- Repair deformed terminal. Make certain there is no terminal being exposed or displaced.

(1) Exposed Terminal
(2) Bend Terminal
(3) Sandpaper
(4) Rust

W1012346

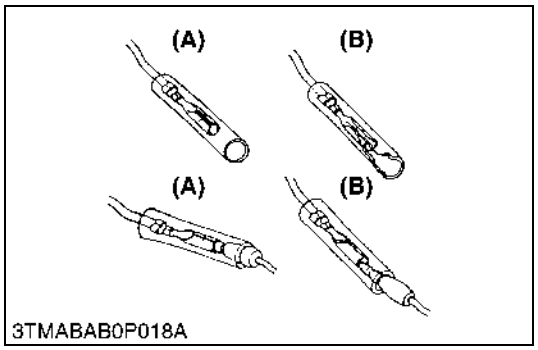


- Make certain that there is no female connector being too open.

**(A) Correct**
**(B) Incorrect**

W1012430

## [5] HANDLING OF CIRCUIT TESTER

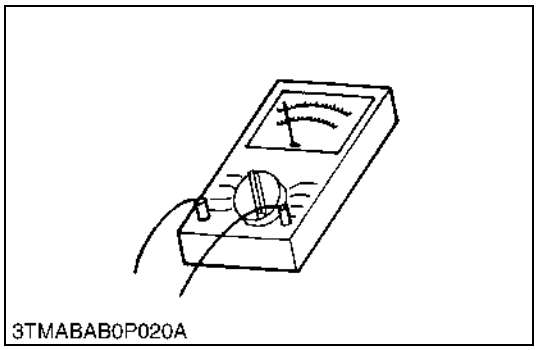


- Use tester correctly following manual provided with tester.
- Check for polarity and range.

W1012684

# 4. LUBRICANTS, FUEL AND COOLANT

| No. | Place | | Capacity<br>ZD25F | Lubricants, fuel and coolant |
|---|---|---|---|---|
| 1 | Fuel | | 30 L<br>7.9 U.S.gals.<br>6.6 Imp.gals. | No. 2-D diesel fuel<br>No. 1-D diesel fuel if temperature is below – 10 °C (14 °F) |
| 2 | Coolant | Cooling system | 4.0 L<br>4.2 U.S.qts.<br>3.5 Imp.qts. | Fresh clean water (soft water) with anti-freeze |
| | | Recovery tank | 0.25 L<br>0.26 U.S.qts.<br>0.22 Imp.qts. | |
| 3 | Engine crankcase | | 3.4 L*<br>3.6 U.S.qts.<br>3.0 Imp.qts. | Engine oil : API Service Classification CC or CD<br>Below 0 °C (32 °F) : SAE10W, 10W-30 or 10W-40<br>0 to 25 °C (32 to 77 °F) : SAE20, 10W-30 or 10W-40<br>Above 25 °C (77 °F) : SAE30, 10W-30 or 10W-40 |
| 4 | Transmission case | | 3.2 L<br>3.4 U.S.qts.<br>2.8 Imp.qts. | KUBOTA UDT or SUPER UDT fluid*1 |
| 5 | Transmission case with filter and hose | | 4.0 L<br>4.2 U.S.qts.<br>3.5 Imp.qts. | |
| 6 | Rear axle case | | 1.8 L each<br>1.9 U.S.qts. each<br>1.6 Imp.qts. each | KUBOTA UDT or SUPER UDT fluid*1 or SAE 80 · 90 gear oil |
| 7 | Mower gear case | | 0.40 L<br>0.42 U.S.qts.<br>0.35 Imp.qts. | SAE 90 gear oil |

| Greasing, oiling (Machine) | | | | |
|---|---|---|---|---|
| **No.** | **Place** | **No. of greasing point** | **Capacity** | **Type of grease** |
| 8 | Motion control lever boss | 2 | Until grease overflows | Multi-purpose grease NLGI-2 or NLGI-1 (GC-LB) |
| 9 | Motion control lever | 2 | | |
| 10 | Center pin | 1 | | |
| 11 | King pin | 2 | | |
| 12 | Front wheel | 2 | | |
| 13 | Front lift arm | 2 | | |
| 14 | Universal joint | 3 | | |
| 15 | Seat adjuster | 2 | | |
| 16 | Throttle cable | 2 | Moderate amount | Engine oil |
| **Greasing (Mower)** | | | | |
| 17 | Universal joint | 3 | Until grease overflows | Multi-purpose grease NLGI-2 or NLGI-1 (GC-LB) |
| 18 | Three spindle shafts | 3 | | |
| 19 | Belt tension pulley | 1 | | |
| 20 | Belt tension pivot | 1 | | |
| 21 | Front anti-scalp roller (pro deck) | 2 | | |
| 22 | Front anti-scalp roller pivot boss (pro deck) | 2 | | |

* Oil amount when the oil level is at the upper level of the oil level gauge.

■ **IMPORTANT**
- **To prevent serious damage to hydraulic systems, use only KUBOTA genuine fluid or its equivalent.**

■ **NOTE**
- **Engine Oil :**
  **Oil used in the engine should have an American Petroleum Institute (API) service classification and Proper SAE Engine Oil according to the ambient temperatures as shown above.**
- **Transmission oil (KUBOTA SUPER UDT *1):**
  **The oil used to lubricate the transmission is also used as hydraulic fluid. To insure proper operation of the hydraulic system and complete lubrication of the transmission, it is important that a multi-grade transmission fluid be used in this system. We recommend the use of KUBOTA UDT or SUPER UDT fluid for optimum protection and performance.**
  **Do not mix different brands together.**
- **Indicated capacity of water and oil are manufacture's estimate.**

# 5. TIGHTENING TORQUES

## [1] GENERAL USE SCREWS, BOLTS AND NUTS

**Screws, bolts, and nuts whose tightening torques are not specified in this Workshop Manual should be tightened according to the table below.**

| Indication on top of bolt | ⬡ 4 No-grade or 4T | | | | | | ⟨7⟩ 7T | | | | | | ⟨9⟩ 9T | | |
|---|---|---|---|---|---|---|---|---|---|---|---|---|---|---|---|
| Material of bolt | SS400, S20C | | | | | | S43C, S48C | | | | | | SCr435, SCM435 | | |
| Material of opponent part | Ordinariness | | | Aluminum | | | Ordinariness | | | Aluminum | | | Ordinariness | | |
| Unit / Diameter | N·m | kgf·m | ft-lbs | N·m | kgf·m | ft-lbs | N·m | kgf·m | ft-lbs | N·m | kgf·m | ft-lbs | N·m | kgf·m | ft-lbs |
| **M6** (6 mm, 0.24 in.) | 7.85 to 9.31 | 0.80 to 0.95 | 5.79 to 6.87 | 7.85 to 8.82 | 0.80 to 0.90 | 5.79 to 6.50 | 9.81 to 11.2 | 1.00 to 1.15 | 7.24 to 8.31 | 7.85 to 8.82 | 0.80 to 0.90 | 5.79 to 6.50 | 12.3 to 14.2 | 1.25 to 1.45 | 9.05 to 10.4 |
| **M8** (8 mm, 0.31 in.) | 17.7 to 20.5 | 1.8 to 2.1 | 13.1 to 15.1 | 16.7 to 19.6 | 1.7 to 2.0 | 12.3 to 14.4 | 23.6 to 27.4 | 2.4 to 2.8 | 17.4 to 20.2 | 17.7 to 20.5 | 1.8 to 2.1 | 13.1 to 15.1 | 29.5 to 34.3 | 3.0 to 3.5 | 21.7 to 25.3 |
| **M10** (10 mm, 0.39 in.) | 39.3 to 45.1 | 4.0 to 4.6 | 29.0 to 33.2 | 31.4 to 34.3 | 3.2 to 3.5 | 23.2 to 25.3 | 48.1 to 55.8 | 4.9 to 5.7 | 35.5 to 41.2 | 39.3 to 44.1 | 4.0 to 4.5 | 29.0 to 32.5 | 60.9 to 70.6 | 6.2 to 7.2 | 44.9 to 52.0 |
| **M12** (12 mm, 0.47 in.) | 62.8 to 72.5 | 6.4 to 7.4 | 46.3 to 53.5 | – | – | – | 77.5 to 90.2 | 7.9 to 9.2 | 57.2 to 66.5 | 62.8 to 72.5 | 6.4 to 7.4 | 46.3 to 53.5 | 103 to 117 | 10.5 to 12.0 | 76.0 to 86.7 |
| **M14** (14 mm, 0.55 in.) | 108 to 125 | 11.0 to 12.8 | 79.6 to 92.5 | – | – | – | 124 to 147 | 12.6 to 15.0 | 91.2 to 108 | – | – | – | 167 to 196 | 17.0 to 20.0 | 123 to 144 |
| **M16** (16 mm, 0.63 in.) | 167 to 191 | 17.0 to 19.5 | 123 to 141 | – | – | – | 197 to 225 | 20.0 to 23.0 | 145 to 166 | – | – | – | 260 to 304 | 26.5 to 31.0 | 192 to 224 |
| **M18** (18 mm, 0.71 in.) | 246 to 284 | 25.0 to 29.0 | 181 to 209 | – | – | – | 275 to 318 | 28.0 to 32.5 | 203 to 235 | – | – | – | 344 to 402 | 35.0 to 41.0 | 254 to 296 |
| **M20** (20 mm, 0.79 in.) | 334 to 392 | 34.0 to 40.0 | 246 to 289 | – | – | – | 368 to 431 | 37.5 to 44.0 | 272 to 318 | – | – | – | 491 to 568 | 50.0 to 58.0 | 362 to 419 |

W1034542

## [2] STUD BOLTS

| Material of opponent part | Ordinariness | | | Aluminum | | |
|---|---|---|---|---|---|---|
| Unit / Diameter | N·m | kgf·m | ft-lbs | N·m | kgf·m | ft-lbs |
| M8 (8 mm, 0.31 in.) | 11.8 to 15.6 | 1.2 to 1.6 | 8.68 to 11.5 | 8.82 to 11.8 | 0.90 to 1.2 | 6.51 to 8.67 |
| M10 (10 mm, 0.39 in.) | 24.6 to 31.3 | 2.5 to 3.2 | 18.1 to 23.1 | 19.7 to 25.4 | 2.0 to 2.6 | 14.5 to 18.8 |
| M12 (12 mm, 0.47 in.) | 29.5 to 49.0 | 3.0 to 5.0 | 21.7 to 36.1 | 31.4 | 3.2 | 23.1 |

W10481390

# [3] METRIC SCREWS, BOLTS AND NUTS

| Grade / Unit / Nominal Diameter | Property class 8.8 (8.8) | | | Property class 10.9 (10.9) | | |
|---|---|---|---|---|---|---|
| | N·m | kgf·m | ft-lbs | N·m | kgf·m | ft-lbs |
| M8 | 23.6 to 27.4 | 2.4 to 2.8 | 17.4 to 20.2 | 29.4 to 34.3 | 3.0 to 3.5 | 21.7 to 25.3 |
| M10 | 48.1 to 55.8 | 4.9 to 5.7 | 35.5 to 41.2 | 60.8 to 70.5 | 6.2 to 7.2 | 44.9 to 52.1 |
| M12 | 77.5 to 90.1 | 7.9 to 9.2 | 57.2 to 66.5 | 103.0 to 117.0 | 10.5 to 12.0 | 76.0 to 86.8 |
| M14 | 124.0 to 147.0 | 12.6 to 15.0 | 91.2 to 108.0 | 167.0 to 196.0 | 17.0 to 20.0 | 123.0 to 144.0 |
| M16 | 196.0 to 225.0 | 20.0 to 23.0 | 145.0 to 166.0 | 260.0 to 303.0 | 26.5 to 31.0 | 192.0 to 224.0 |

W1016172

# [4] AMERICAN STANDARD SCREWS, BOLTS AND NUTS WITH UNC OR UNF THREADS

| Grade / Unit / Nominal Diameter | SAE GR.5 | | | SAE GR.8 | | |
|---|---|---|---|---|---|---|
| | N·m | kgf·m | ft-lbs | N·m | kgf·m | ft-lbs |
| 5/16 | 23.1 to 27.8 | 2.35 to 2.84 | 17.0 to 20.5 | 32.5 to 39.3 | 3.31 to 4.01 | 24.0 to 29.0 |
| 3/ 8 | 47.5 to 57.0 | 4.84 to 5.82 | 35.0 to 42.0 | 61.0 to 73.2 | 6.22 to 7.47 | 45.0 to 54.0 |
| 1/ 2 | 108.5 to 130.2 | 11.07 to 13.29 | 80.0 to 96.0 | 149.2 to 179.0 | 15.22 to 18.27 | 110.0 to 132.0 |
| 9/16 | 149.2 to 179.0 | 15.22 to 18.27 | 110.0 to 132.0 | 217.0 to 260.4 | 22.14 to 26.57 | 160.0 to 192.0 |
| 5/ 8 | 203.4 to 244.1 | 20.75 to 24.91 | 150.0 to 180.0 | 298.3 to 358.0 | 30.44 to 36.53 | 220.0 to 264.0 |

W1022485

# [5] PLUGS

| Shape | Size | Material of opponent part | | | | | |
|---|---|---|---|---|---|---|---|
| | | Ordinariness | | | Aluminum | | |
| | | N·m | kgf·m | ft-lbs | N·m | kgf·m | ft-lbs |
| Tapered screw | R1/8 | 12.7 to 21.6 | 1.3 to 2.2 | 9.4 to 15.9 | 12.7 to 19.6 | 1.3 to 2.0 | 9.4 to 15.4 |
| | R1/4 | 24.5 to 44.1 | 2.5 to 4.5 | 18.1 to 32.5 | 24.5 to 34.3 | 2.5 to 3.5 | 18.1 to 25.4 |
| | R3/8 | 49.0 to 88.3 | 5.0 to 9.0 | 36.2 to 65.1 | 49.0 to 58.8 | 5.0 to 6.0 | 36.2 to 43.4 |
| | R1/2 | 58.8 to 107.9 | 6.0 to 11.0 | 43.4 to 79.6 | 58.8 to 78.5 | 6.0 to 8.0 | 43.4 to 57.9 |
| Straight screw | G1/4 | 24.5 to 34.3 | 2.5 to 3.5 | 18.1 to 25.3 | – | – | – |
| | G3/8 | 61.8 to 82.4 | 6.3 to 8.4 | 45.6 to 60.8 | – | – | – |
| | G1/2 | 49.0 to 88.3 | 5.0 to 9.0 | 36.2 to 65.1 | – | – | – |

0000001666E

# 6. MAINTENANCE CHECK LIST

| No. | Items | Period | Service interval | | | | | After purchase | | Important | Reference page |
|---|---|---|---|---|---|---|---|---|---|---|---|
| | | | 50 | 100 | 150 | 200 | 400 | 1 year | 2 years | | |
| 1 | Engine oil | Change | ★ | ☆ | | | | | | | G-17 |
| 2 | Engine oil filter | Replace | ★ | | | ☆ | | | | | G-17 |
| 3 | Transmission fluid | Change | | | | ★ | ☆ | | | | G-19 |
| 4 | Transmission oil filter | Replace | ★ | | | ☆ | | | | | G-18 |
| 5 | Transmission strainer | Clean | | | | ★ | ☆ | | | | G-19 |
| 6 | Rear axle gear case (RH and LH) fluid | Change | | | | ★ | ☆ | | | | G-20 |
| 7 | Front axle pivot | Adjust | | ★ | | ☆ | | | | | G-18 |
| 8 | Safety device | Check | ☆ | | | | | | | | G-21 |
| 9 | Greasing (without mower) | – | ☆ | | | | | | | | G-23 |
| 10 | Mower gear box oil | Check | ☆ | | | | | | | | G-25 |
| | | Change | | | ☆ | | | | | | G-30 |
| 11 | Air cleaner element | Clean | ☆ | | | | | | | *1 | G-24 |
| | | Replace | | | | | | ☆ | | *2 | G-32 |
| 12 | Battery condition | Check | | ☆ | | | | | | | G-25 |
| 13 | Fan belt | Adjust | | ☆ | | | | | | | G-27 |
| 14 | Parking brake | Check | | ☆ | | | | | | | G-28 |
| 15 | Fuel filter element | Check | | ☆ | | | | | | | G-27 |
| | | Replace | | | | | ☆ | | | | G-32 |
| 16 | Fuel line | Check | | ☆ | | | | | | | G-27 |
| | | Replace | | | | | | | ☆ | | G-35 |
| 17 | Radiator hose and clamp | Check | | | | ☆ | | | | | G-30 |
| | | Replace | | | | | | | ☆ | | G-35 |
| 18 | Hydraulic hose | Check | | | | ☆ | | | | | G-30 |
| | | Replace | | | | | | | ☆ | | G-35 |
| 19 | Intake air line | Check | | | | ☆ | | | | | G-31 |
| | | Replace | | | | | | | ☆ | | G-35 |
| 20 | Motion control lever pivot | Adjust | | | | ☆ | | | | | G-31 |
| 21 | Radiator | Clean | | | | | | ☆ | | | G-33 |
| 22 | Coolant | Change | | | | | | ☆ | | | G-33 |
| 23 | Mower gear box oil seal | Replace | | | | | | | ☆ | | G-35 |
| 24 | Fuel system | Bleed | Service as required | | | | | | | | G-37 |
| 25 | Fuse | Replace | | | | | | | | | G-36 |
| 26 | Blade | Replace | | | | | | | | | G-37 |
| 27 | Mower belt | Replace | | | | | | | | | G-37 |

W1037757

■ **IMPORTANT**

- **The jobs indicated by ★ must be done initially.**

***1 Air cleaner should be cleaned more often in dusty conditions than in normal conditions.**

***2 Every year or every 6 times of cleaning.**

# 7. CHECK AND MAINTENANCE

**CAUTION**

- **Be sure to check and service the machine on a flat place with engine shut off, the parking brake on and chock the wheels.**

## [1] DAILY CHECK

To prevent trouble from occurring, it is important to know the condition of the machine. Check the following items before starting.

**Checking**

- Check areas where previous trouble was experienced.
- Walk around the machine.

1. Tire pressure, wear and damage
2. Oil and water leak
3. Engine oil level
4. Transmission fluid level
5. Coolant level in the recovery tank
6. Damage of machine body, tightness of all bolts and nuts
7. Radiator screen
8. Panel screen
9. Brake play
10. Air cleaner
11. Fuel level
12. Oiling

- Mower

1. Oil leak
2. Make sure blade cap screws are tight.
3. Check blades for wear or damage.
4. Check all hardware.
5. Make sure all pins are in place.
6. Mower deck cleaning
7. Greasing

- While sitting in the operator's seat,

1. Motion control lever
2. Parking brake

- Turning the key switch **"ON"**

1. Performance of the easy checker light

- Starting the engine,

1. Color of the exhaust fumes
2. Safety start switch, seat safety control and another safety control and another safety devices.
3. Check for abnormal noise and vibration.

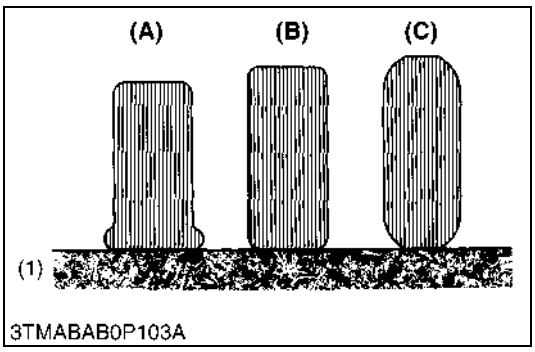


## Checking Tire Pressure

**WARNING**

**To avoid personal injury:**

- **Do not attempt to mount a tire on a rim. This should be done by a qualified person with the proper equipment.**
- **Always maintain the correct tire pressure.**
  **Inflation pressure in front tires rises quickly when using compressed air.**
  **Do not inflate tires above the recommended pressure shown in the Operator's Manual.**

■ **IMPORTANT**

- **Do not use tires larger than specified.**

■ **Inflation Pressure**

Though the inflation pressure is factory-set to the prescribed level, it naturally drops slowly in the course of time. Thus, check it and inflate as necessary.

| | Tire Sizes | Recommended Inflation Pressure |
|---|---|---|
| Front | 15 × 6.0-6, 4PR Rib | 207 kPa (2.1 kgf/cm$^2$, 30 psi) |
| Rear | 24 × 12.0-12, 4PR Turf | 140 kPa (1.4 kgf/cm$^2$, 20 psi) |

(1) Ground

**(A) Insufficient**
**(B) Normal**
**(C) Excessive**

W1041550

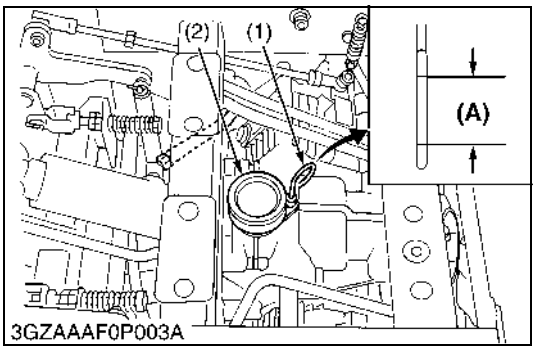


## Checking Transmission Fluid Level

1. Park the machine on a flat surface, lower the implement to the ground and shut off engine and remove the key.
2. Raise and lock the operator's seat.
3. To check the oil level, draw out the dipstick, wipe it clean, replace it, and draw it out again. Check to see that the oil level lies between the two notches. If the level is too low, add new oil to the prescribed level at the oil inlet.
   (See page G-7.)

■ **IMPORTANT**

- **If oil level is low, do not run engine.**

(1) Oil Level Dipstick
(2) Oil Plug and Breather Cup

**(A) Oil level is acceptable within this range.**

W1041984

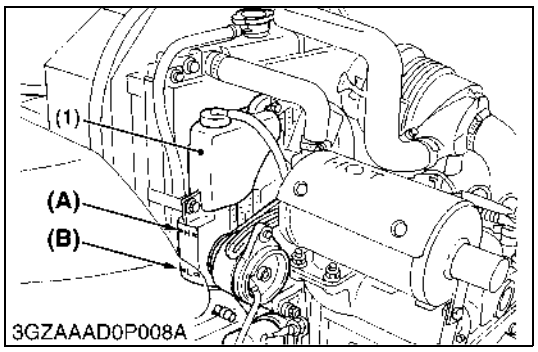


## Checking Coolant Level

**CAUTION**

**To avoid personal injury:**

- **Do not remove the radiator cap when the engine is hot. Then loosen cap slightly to the stop to relieve any excess pressure before removing cap completely.**

1. Check to see that the coolant level is between the **"FULL"** and **"LOW"** marks of recovery tank.
2. When the coolant level drops due to evaporation, add water only up to the full level of the recovery tank.
   In case of leakage, add anti-freeze and water in the specified mixing ratio up to the full level.
   (See page G-7.)

■ **IMPORTANT**

- **If the radiator cap has to be removed, follow the caution above and securely retighten the cap.**
- **Use clean, distilled water and anti-freeze to fill the recovery tank.**

(1) Recovery Tank
**(A) FULL**
**(B) LOW**

W1042377

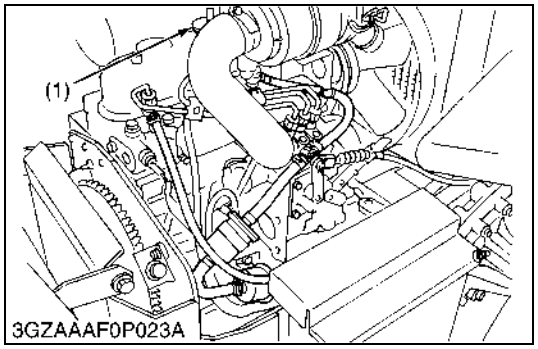


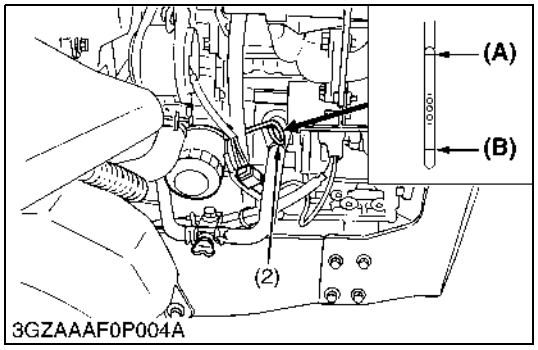


## Checking Engine Oil Level

**CAUTION**

**To avoid personal injury:**

- **Always stop the engine and remove the key before checking oil.**

1. Check engine oil before starting and 5 minutes or more after the engine has stopped.
2. Wipe dipstick area clean.
3. To check the oil level, remove the dipstick, wipe it clean, replace it, and draw it out again. Check to see that the oil level is between the two notches.
4. Add new oil to the prescribed level at the oil port if necessary.
5. When using a different brand or viscosity oil from the previous one, remove all of the old oil and oil filter. Never mix two different types of oil.
6. Use the proper Engine Oil SAE according to the ambient temperatures. (See page G-7.)

(1) Engine Oil Port
(2) Oil Level Dipstick
**(A) Upper Level**
**(B) Lower Level**

W1042659

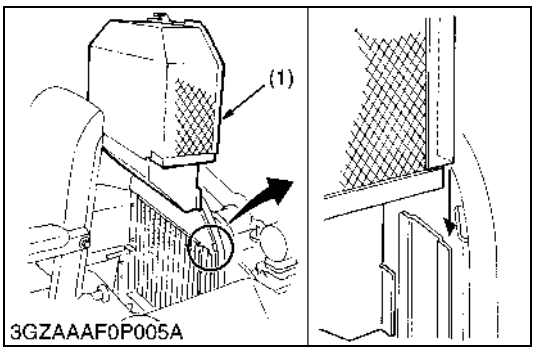


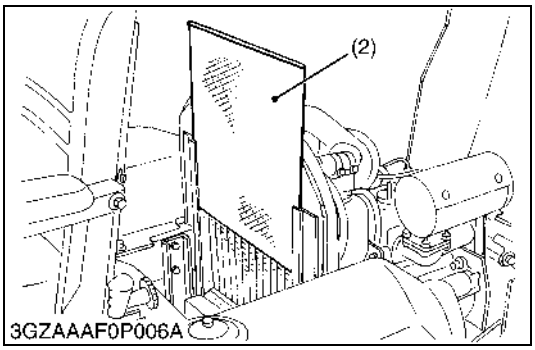


## Checking and Cleaning Radiator to Prevent Overheating

**CAUTION**

**To avoid personal injury:**

- **Be sure to stop the engine and remove the key before cleaning.**

Daily or after every 5 hours of operation, check to be sure the radiator screen and radiator core are clean. Dirt or chaff on the radiator screen or radiator core decrease cooling performance.

1. Remove the radiator screen and panel screen and remove all foreign material.
2. Remove the dust from between the fins and the tube.
3. Tighten the fan drive belt as necessary. For this, refer to “EVERY 100 HOURS” in Maintenance section.
4. If scale forms in the tube, clean with the scale inhibitor or its equivalent.
5. Each time the panel screen is covered with grass during operation, rub it off the screen with hand. Check the radiator screen from time to time if grass accumulates.
6. If the dust or chaff has accumulated inside of the panel, remove the radiator screen and clean inside completely.
   After cleaning, replace the radiator screens properly.

■ **NOTE**

- **When assembling the panel screen, be sure to fit it in the runners.**

(1) Panel Screen (2) Radiator Screen

W1043048

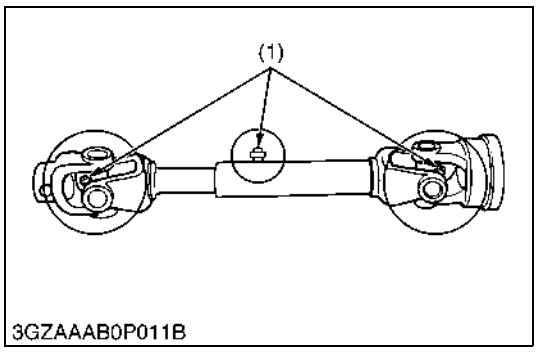


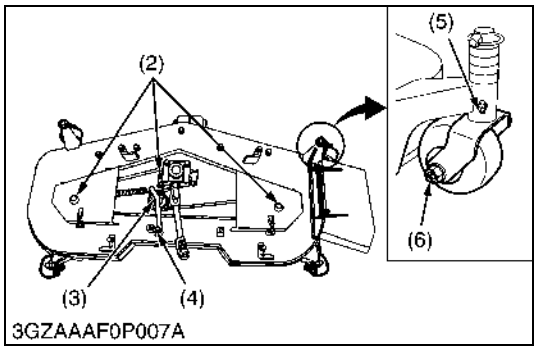


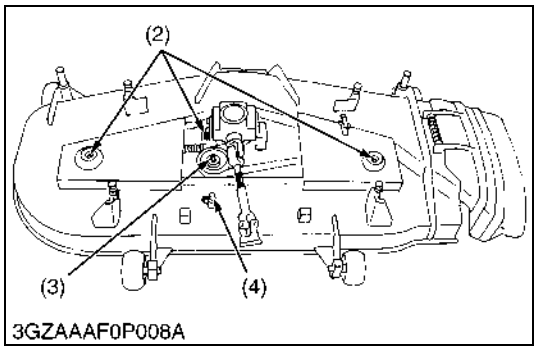


## Greasing (Mower)

**CAUTION**

**To avoid personal injury:**

- **Be sure to stop the engine and remove the key before greasing.**

1. Apply grease to the following position as figures.

(1) Mower Universal Joint
(2) Spindle Shaft
(3) Belt Tension Pulley
(4) Belt Tension Pivot
(5) Front Side Anti-scalp Roller Bracket
(6) Frint Side Anti-scalp Roller

W1043490

# [2] CHECK POINTS OF INITIAL 50 HOURS

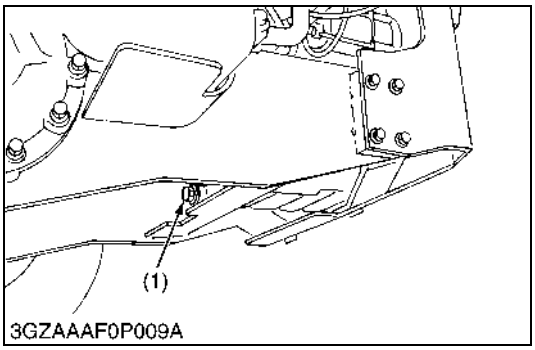


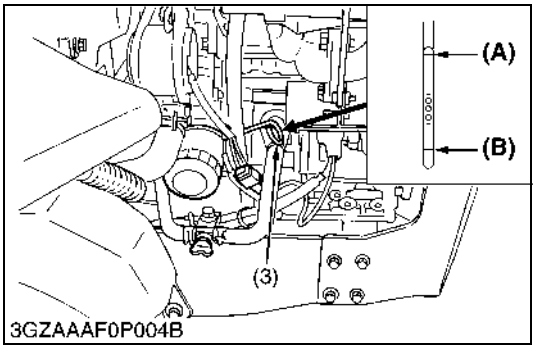


## Changing Engine Oil

**CAUTION**

- **Be sure to stop the engine before changing oil.**

1. Start and warm up the engine for approx. 5 minutes.
2. Place an oil pan underneath the engine.
3. To drain the used oil, remove the drain plug (1) at the bottom of the engine and drain the oil completely.
4. Screw in the drain plug (1).
5. Fill new oil up to upper line on the dipstick (3).

**■ IMPORTANT**

- **When using an oil of different manufacture or viscosity from the previous one, remove all of the old oil.**
- **Never mix two different type of oil.**
- **Use the proper SAE engine oil according to ambient temperatures.**
  **Refer to "LUBRICANTS, FUEL AND COOLANT".**
  **(See page G-7.)**

| | |
|---|---|
| Engine oil capacity | 3.4 L<br>3.6 U.S.qts.<br>3.0 Imp.qts. |

(1) Drain Plug
(2) Oil Inlet Plug
(3) Dipstick

**(A) Upper Level**
**(B) Lower Level**

W1030749

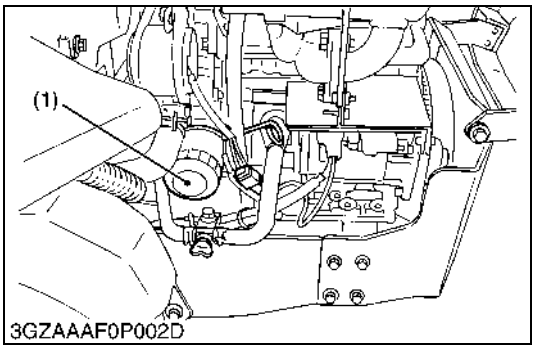


## Replacing Engine Oil Filter Cartridge

**CAUTION**

- **Be sure to stop the engine before changing the oil filter cartridge.**
- **Allow engine to cool down sufficiently, oil can be hot and may cause burns.**

1. Remove the engine oil filter cartridge (1) with the filter wrench.
2. Apply a slight coat of oil onto the rubber gasket of new cartridge.
3. To install the new cartridge, screw it in by hand. Over tightening may cause deformation of rubber gasket.
4. After the cartridge has been replaced, the engine oil level normally lowers a little. Add engine oil to proper level. Check for oil leaks around filter gasket.

**■ IMPORTANT**

- **To prevent serious damage to the engine, element of recommended type must be used. Use only a genuine KUBOTA filter or its equivalent.**

(1) Engine Oil Filter Cartridge

W1030949

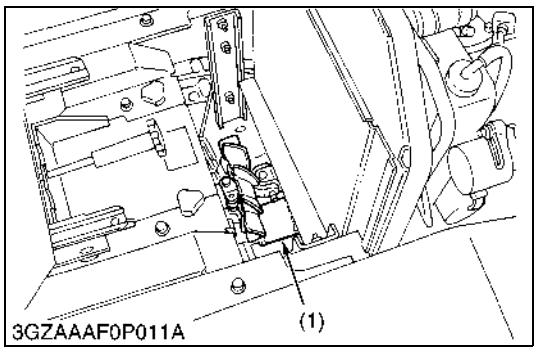


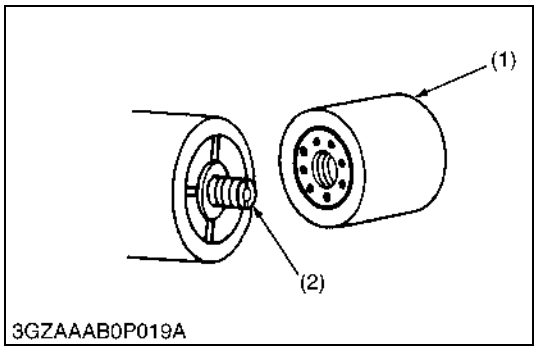


**Replacing Transmission Oil Filter Cartridge**

**CAUTION**

- **Be sure to stop the engine before changing the oil filter cartridge.**
- **Allow transmission case to cool down sufficiently; oil can be hot and may cause burns.**

1. The oil filter cartridge must be changed every 300 service hours.
2. Remove the oil filter cartridge with the filter wrench.
3. Lightly tighten the screw (2) by using a screwdriver.
4. Apply a slight coat of oil onto the cartridge gasket.
5. To install the new cartridge, screw it in by hand.
   Over tightening may cause deformation of rubber gasket.
6. After the new cartridge has been replaced, the transmission fluid level normally lowers a little. Add fluid to proper level. Check for oil leaks around filter gasket.

■ **IMPORTANT**

- **To prevent serious damage to hydraulic system, the replacement filter must be a highly efficient, 10 μm filter. Use only a genuine KUBOTA filter or its equivalent.**

(1) Transmission Oil Filter Cartridge (2) Screw

W1031068

# [3] CHECK POINT OF INITIAL 100 HOURS

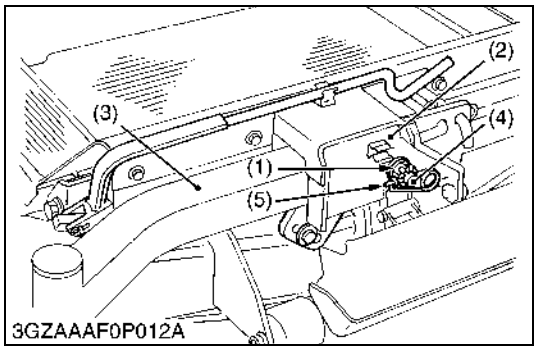


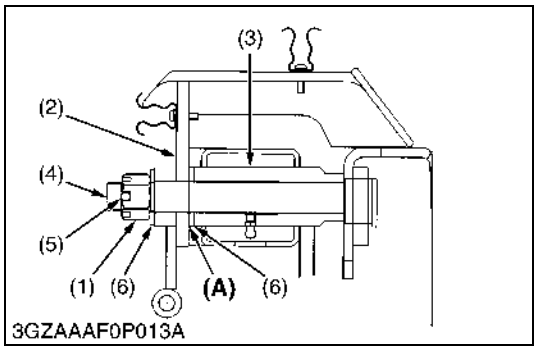


**Adjusting Front Axle Pivot**

1. Lift up and securely block the front of the machine.
2. Measure the clearance **(A)** between the front axle (3) and front axle support (2).
3. If the measurement exceeds the allowable limit, remove the set spring (5) and adjust the end play by slotted nut (1).

**(When reassembling)**

| | | |
|---|---|---|
| Tightening torque | Center pin lock nut (Slotted nut) | 40 to 80 N·m<br>4.08 to 8.16 kgf·m<br>29.50 to 59.00 ft-lbs |

■ **NOTE**

- **When fastening the center pin (4), tighten the nut (1) so that the front axle maybe oscillated smoothly by hand.**

| | | |
|---|---|---|
| Front axle end play **(A)** | Factory spec. | 0 to 0.2 mm<br>0 to 0.008 in. |
| | Allowable limit | 0.5 mm<br>0.02 in. |

(1) Slotted Nut
(2) Front Axle Support
(3) Front Axle
(4) Center Pin
(5) Set Spring
(6) Plain Washer

**(A) Front Axle End Play**

W1053511

# [4] CHECKING POINTS OF INITIAL 200 HOURS

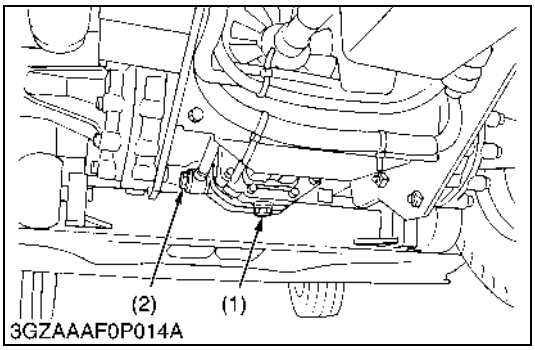


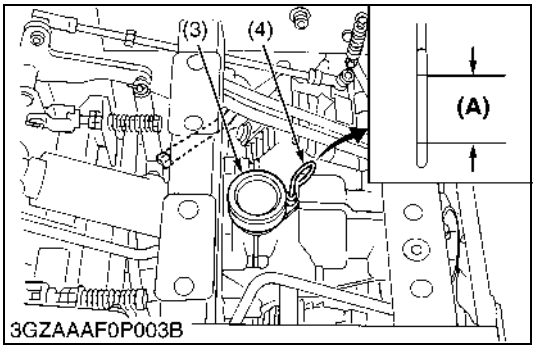


## Changing Transmission Fluid

**CAUTION**

- **Be sure to stop the engine before changing the transmission fluid.**

1. Place an oil pan underneath the transmission case.
2. Remove the drain plugs (1) at the bottom of the transmission case and drain the oil completely.
3. After draining, screw in the drain plug.
4. Fill new oil from filling port after removing the filling plug (3) up to the upper notch on the dipstick.
5. After running the engine for a few minutes, stop it and check the oil level again, if low, add oil to prescribed level.

■ **IMPORTANT**

- **Use only multi-grade transmission oil. Use of other oils may damage the transmission or hydraulic system.**
  **Refer to "LUBRICANTS, FUEL AND COOLANT". (See page G-7.)**
- **Never work the machine immediately after changing the transmission oil. Keeping the engine at medium speed for a few minutes prevents damage to the transmission.**
- **Do not mix different brands oil together.**

| | |
|---|---|
| Transmission fluid capacity (with filter and hose) | 4.0 L<br>4.2 U.S.qts.<br>3.5 Imp.qts. |

(1) Drain Plug
(2) Transmission Strainer
(3) Oil Plug and Breather Cup
(4) Dipstick

**(A) Oil level acceptable within this range.**

W1048918

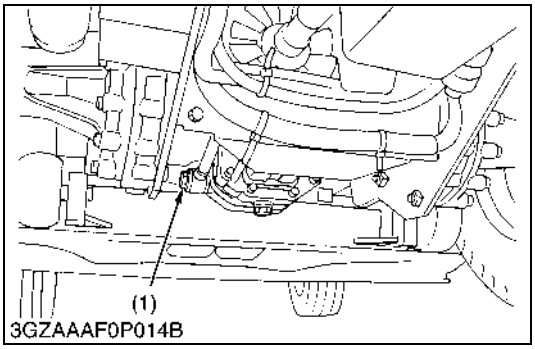


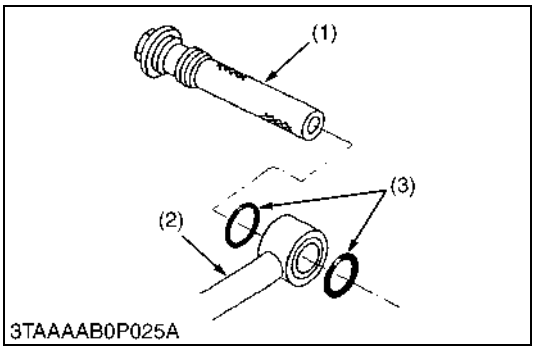


## Cleaning Transmission Strainer

When changing the transmission fluid, disassemble and rinse the strainer with nonflammable solvent to completely clean off filings.

Check O-rings (3), replace if damaged, cracked or hardened.

When reassembling be careful not to damage the parts.

■ **NOTE**

- **Since the fine filings in the oil can damage the precision component parts of the hydraulic system, the end of the suction line is provided with an oil strainer.**

(1) Strainer
(2) Suction Line
(3) O-ring

W1049356

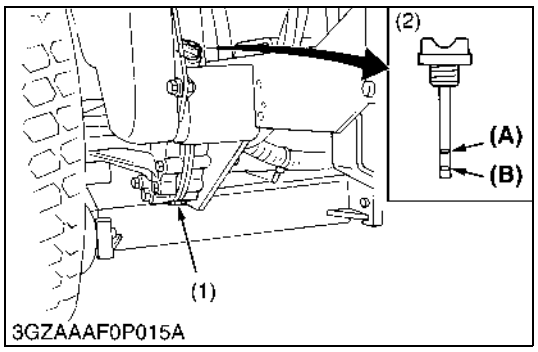


## Changing Rear Axle Case Oil (RH and LH)

**CAUTION**

- **Be sure to stop the engine before changing the transmission fluid.**

1. Place an oil pan underneath the rear axle gear case.
2. Remove the drain plugs (1) at the bottom of the transmission case and drain the oil completely.
3. After draining, screw in the drain plug.
4. Fill new oil from filling port after removing the filling plug (2) up to the upper line of the gauge.
5. After running the engine for a few minutes, stop it and check the oil level again, if low, add oil to prescribed level.

■ **IMPORTANT**

- **Use only multi-grade transmission oil. Use of other oils may damage the transmission or hydraulic system.**
  **Refer to "LUBRICANTS, FUEL AND COOLANT". (See page G-7.)**
- **Never work the machine immediately after changing the transmission oil. Keeping the engine at medium speed for a few minutes prevents damage to the transmission.**
- **Do not mix different brands oil together.**

| | |
|---|---|
| Rear axle case oil capacity | 1.8 L each<br>1.9 U.S.qts. each<br>1.6 Imp.qts. each |

(1) Drain Plug
(2) Filling Plug with Gauge
**(A) Upper Level**
**(B) Lower Level**

W1049491

# [5] CHECK POINTS OF EVERY 50 HOURS

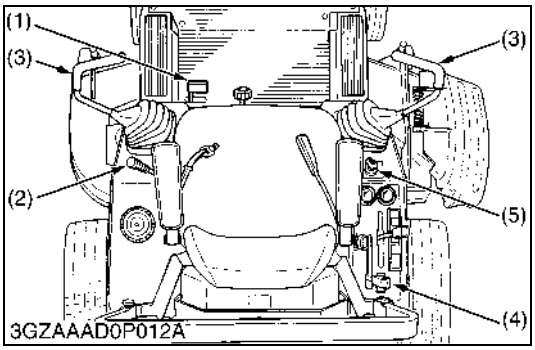


**Checking Safety Device**

**CAUTION**

**To avoid personal injury:**

- **Do not allow anyone near the machine while testing.**
- **If the machine does not pass one of the following tests, do not operate the machine.**
- **Sit on operator's seat for all tests except for Test 1.**

■ **Test 1 (OPERATOR NOT ON THE SEAT)**

1. Securely set the parking brake.
2. Shift the PTO lever (4) to **"DISENGAGE" (OFF)** position.
3. Set the motion control levers (3) to the **"NEUTRAL LOCK"** position.
4. Turn the key switch (5) to **"START"** position.
5. The engine must not crank.

■ **Test 2 (OPERATOR ON THE SEAT)**

1. Do not set the parking brake. (Release it from test 1.)
2. Shift the PTO lever (4) to **"DISENGAGE" (OFF)** position.
3. Set the motion control levers (3) to the **"NEUTRAL LOCK"** position.
4. Turn the key switch (5) to **"START"** position.
5. The engine must not crank.

■ **Test 3 (OPERATOR ON THE SEAT)**

1. Securely set the parking brake.
2. Shift the PTO lever (4) to **"DISENGAGE" (OFF)** position.
3. Grasp the motion control levers (3) and move then inward from **"NEUTRAL LOCK"** position to **"NEUTRAL"** position and then release the levers.
4. Turn the key switch (5) to **"START"** position.
5. The engine must not crank.

■ **Test 4 (OPERATOR ON THE SEAT)**

1. Securely set the parking brake.
2. Shift the PTO lever (4) to **"ENGAGE" (ON)** position.
3. Grasp the motion control levers (3) and move then inward from **"NEUTRAL LOCK"** position to **"NEUTRAL"** position and then release the levers.
4. Turn the key switch (5) to **"START"** position.
5. The engine must not crank.

■ **Test 5 (OPERATOR ON THE SEAT)**

1. Start the engine.
2. Keeps the parking brake securely set.
3. Shift the PTO lever (4) to **"DISENGAGE" (OFF)** position.
4. Grasp the motion control levers (3) and move then inward from **"NEUTRAL LOCK"** position to **"NEUTRAL"** position and then release the levers.
5. The engine must shut off after a short time delay.

■ **IMPORTANT**

- **For this test only, the engine will shut off in a few seconds.**

(1) Parking Brake Lock Pedal
(2) Parking Brake Release Lever
(3) Motion Control Lever
(4) PTO Lever
(5) Key Switch

W1050412

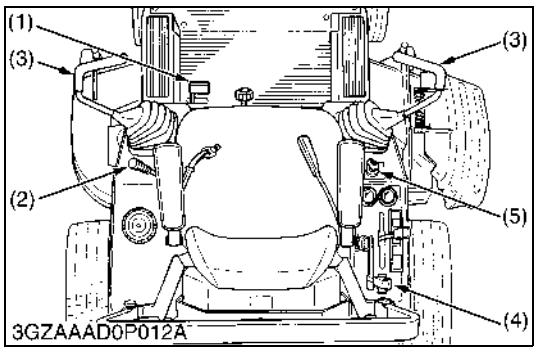


■ **Test 6 (OPERATOR ON THE SEAT)**

1. Start the engine.
2. Do not set the parking brake.
3. Shift the PTO lever (4) to **"DISENGAGE" (OFF)** position.
4. Grasp the motion control levers (3) and move then inward from **"NEUTRAL LOCK"** position to **"NEUTRAL"** position and then release the levers.
5. Stand up. (Do not get off the machine.)
6. The engine must shut off.

■ **Test 7 (OPERATOR ON THE SEAT)**

1. Start the engine.
2. Do not set the parking brake.
3. Shift the PTO lever (4) to **"ENGAGE" (ON)** position.
4. Stand up. (Do not get off the machine.)
5. The engine must shut off.

(1) Parking Brake Lock Pedal
(2) Parking Brake Release Lever
(3) Motion Control Lever
(4) PTO Lever
(5) Key Switch

W1032761

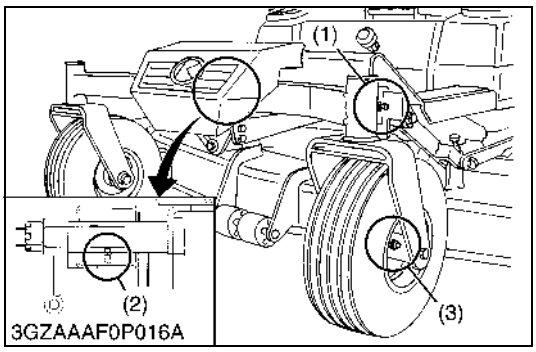


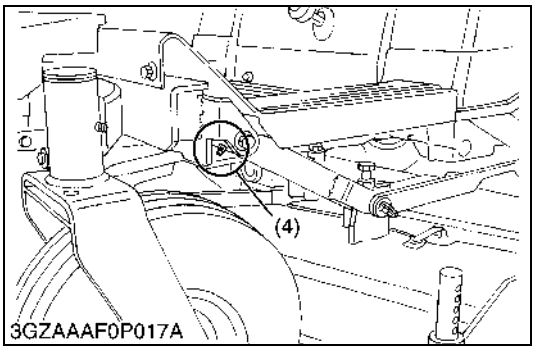


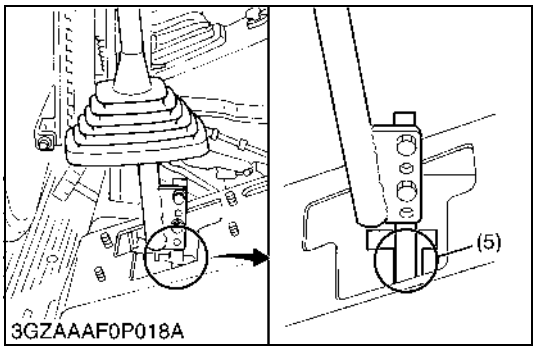


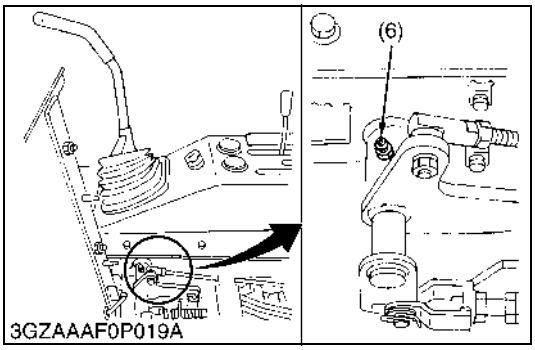


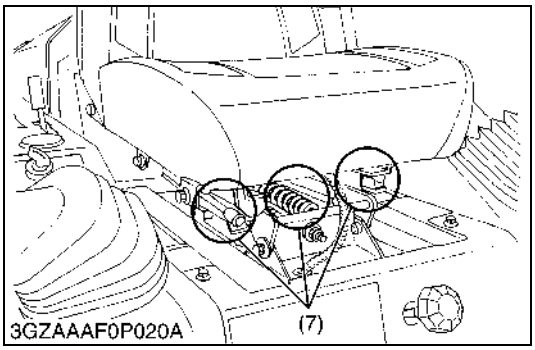


## Greasing

1. Apply a grease to the following position as figures.

**CAUTION**

**To avoid personal injury:**

- **Be sure to stop the engine and remove the key before greasing.**

(1) King Pin (LH · RH)
(2) Center Pin
(3) Front Wheel (LH · RH)
(4) Front Lift Arm (LH · RH)
(5) Motion Control Levers (LH · RH)
(6) Motion Control Lever Boss (LH · RH)
(7) Seat Adjuster

W1034228

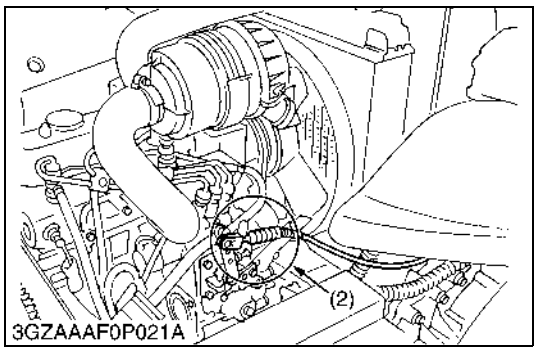


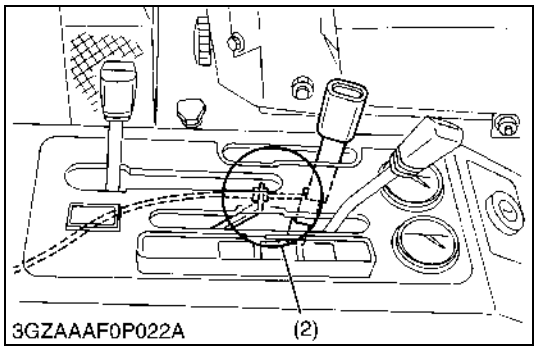


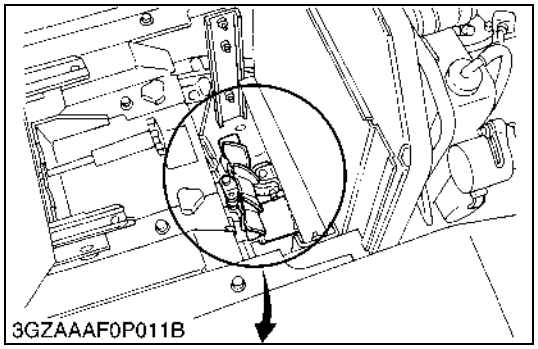


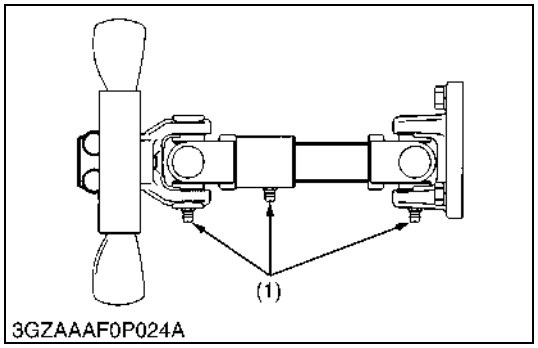


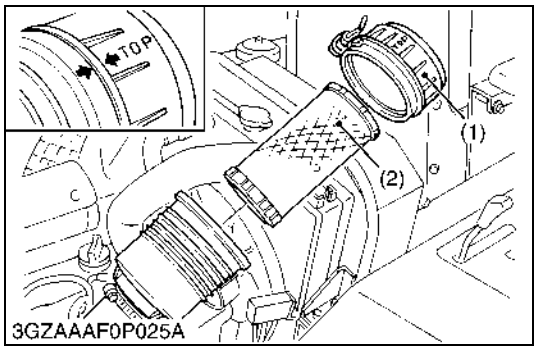


## Greasing (Continued)

1. Apply a grease to the following position as figures.

**CAUTION**

**To avoid personal injury:**

- **Be sure to stop the engine and remove the key before greasing.**

(1) Machine Universal Joint (2) Throttle Cable (Oil)

W1035206

## Cleaning Air Cleaner Element

1. The air cleaner uses a dry element, never apply oil.
2. Do not touch the filter element except where cleaning is required. To clean the element, use clean and dry compressed air on the inside of the element. Air pressure should not exceed 205 kPa (2.1 kgf/cm$^2$, 30 psi).

■ **NOTE**

- **Operating in dusty conditions requires more frequent maintenance.**
- **Align the arrow marks when reinstalling the air cleaner cover.**

(1) Air Cleaner Cover (2) Air Cleaner Element

W1053698

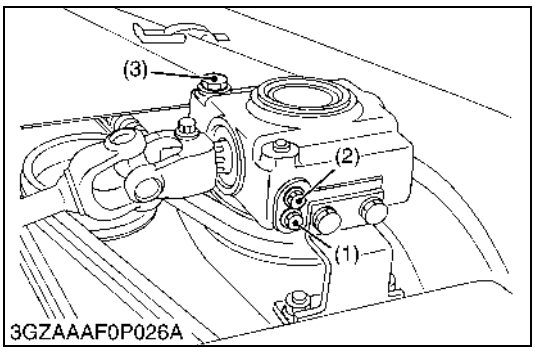


**Checking Gear Box Oil Level**

**CAUTION**

**To avoid personal injury:**

- **Always stop the engine and remove the key before checking oil.**

1. Park the machine on a flat surface and lower the mower to the ground.
   To check the oil level, loosen check plug bolt and check to see that the oil level is just below the check plug port.
   If the level is too low, add new oil to the prescribed level at the oil inlet.
   (See page G-7.)

(1) Drain Plug (Bolt)
(2) Check Plug (Bolt)
(3) Oil Filler Plug

W1054012

# [6] CHECK POINTS OF EVERY 100 HOURS

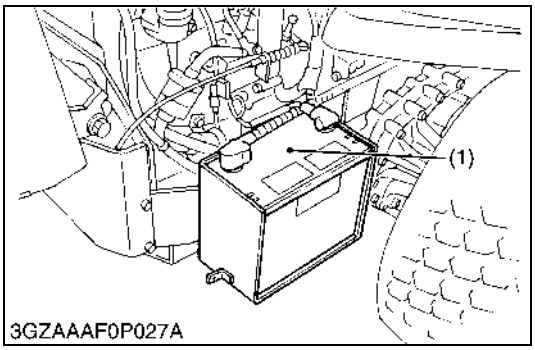


**Checking Battery Condition**

**CAUTION**

- **Never remove the vent cap while the engine is running. Keep electrolyte away from eyes, hands and clothes. If you are spattered with it, wash it away completely with water immediately and get medical attention.**
- **Wear eye protection and rubber gloves when working around battery.**

Mishandling the battery shortens the service life and adds to maintenance costs.

The original battery is a maintenance-free, non accessible type battery.

If the battery is weak, the engine will be difficult to start and the lights will become dim. It is important to check the battery periodically.

(1) Battery

W1083097

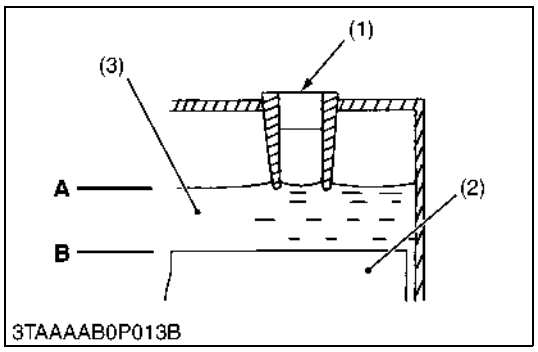


■ **Battery Charging**

**DANGER**

**To avoid serious injury or death:**

- **When the battery is being activated, hydrogen and oxygen gases in the battery are extremely explosive. Keep open sparks and flames away from the battery at all times, especially when charging the battery.**

**CAUTION**

- **When charging battery, ensure that the vent caps are securely in place (if equipped).**
- **When disconnecting the cables from the battery, start with the negative terminal first.**
  **When connecting the cables to the battery, start with the positive terminal first.**
- **Never check battery charge by placing a metal object across the posts.**
  **Use a voltmeter or hydrometer.**
  (For accessible maintainable type batteries with removable vent caps.)

1. Make sure each electrolyte level is at the bottom of vent wells, if necessary add distilled water in a well-ventilated area.
2. The water in the electrolyte evaporates during recharging. Liquid shortage damages the battery. Excessive liquid spills over and damages the machine body.
3. To slow charge the battery, connect the battery positive terminal to the charger positive terminal and the negative to the negative, then recharge in the standard fashion.
4. A boost charge is only for emergencies. It will partially charge the battery at a higher rate and in a short time.
   When using a boost-charged battery, it is necessary to recharge the battery as soon as possible.
   Failure to do this will shorten the battery's service life.
5. When the specific gravity of electrolyte reaches 1.27 to 1.29, charge has completed.
6. When exchanging an old battery with new one, use a battery of equal specification shown in "SPECIFICATIONS".
   (For non-accessible maintenance-free type batteries.)
   Maintenance-free, non-accessible batteries are designed to eliminate the need to add water. Yet the volume of electrolyte above plates may eventually become depleted due to abnormal conditions such as high heat or improper regulator setting. Use a voltmeter to check the state of charge. (See reference chart to determine if charging is necessary.)

| Battery voltage | Reference state of change |
|---|---|
| 12.6 | 100 % (Full charge) |
| 12.4 | 75 % |
| 12.2 | 50 % |
| 12.0 | 25 % |
| 11.8 | 0 % |

(1) Vent well
(2) Separator
(3) Electrolyte

**(A) Highest Level**
**(B) Lowest Level**

W1035046

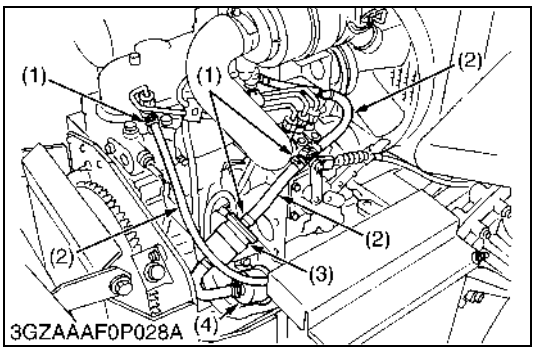


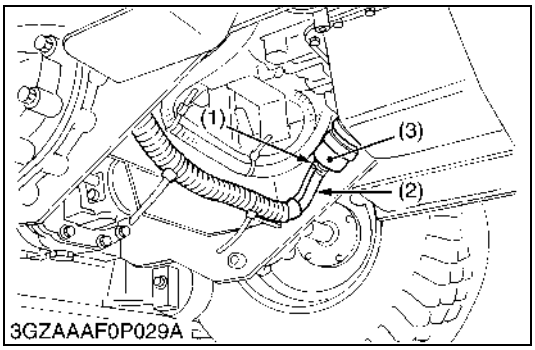


## Checking Fuel Lines And Fuel Filter

**CAUTION**

- **Be sure to stop the engine and remove the key when attempting to make the following checks and changes.**
- **Never fail to check the fuel lines periodically. The fuel lines are subject to wear and age. Fuel may leak out onto the running engine, causing a fire.**

The fuel line connections should be checked annually or every 100 service hours, whichever comes first.

1. The fuel lines is made of rubber and ages regardless of service period.
2. If the fuel line and clamps are found damages or deteriorated, replace them.
3. Check fuel filter, if it is clogged by debris, and replace it.

**■ IMPORTANT**

- **When the fuel line is disconnected for maintenance or repair, close both ends of the fuel line with a piece of clean cloth or paper to prevent dust and dirt from entering. In addition, particular care must be taken not to admit dust and dirt into the fuel pump. Entrance of dust and dirt causes malfunction of the fuel pump and injector components.**

(1) Pipe Clamps
(2) Fuel Line
(3) Fuel Filter
(4) Fuel Pump

W1034725

## Changing Engine Oil

1. See page G-17.

W1034674

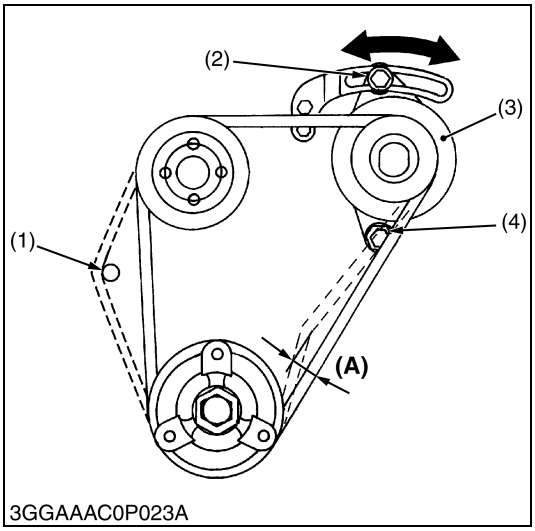


## Adjusting Fan Belt Tension

**CAUTION**

- **Be sure to stop the engine and remove the key before checking belt tension.**

1. If the fan drive belt becomes loose, the engine may overheat.
2. To adjust, loosen bolts and turn the alternator to tighten the belt.
3. After adjustment, securely tighten the bolts.

**Moderate belt tension:**

The belt deflect approx. 10 mm (0.4 in.) when the center of the belt is depressed with finger pressure of 98 N (10 kgf, 22 lbs).

| | | |
|---|---|---|
| Fan belt tension **(A)** | Factory spec. | Approx. 10 mm<br>0.4 in. |

**■ IMPORTANT**

- **When replacing fan belt, be careful not to catch it on the cap under the water pump. See the illustration to the left.**

(1) Cap
(2) Tension bolt
(3) Alternator
(4) Adjustment bolt

W1034382

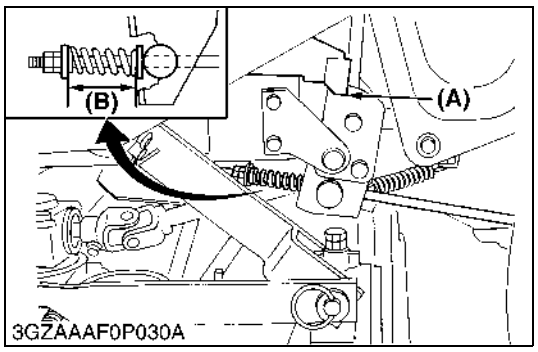


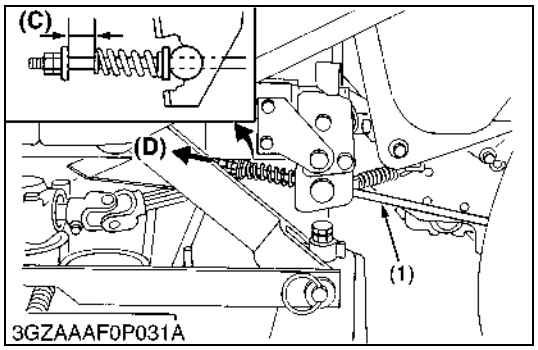


## Checking Parking Brake

**CAUTION**

**To avoid personal injury:**

- **Stop the engine and chock the wheels before checking or adjusting.**
- **Park the machine on a hard and level surface.**

■ **IMPORTANT**

- **Wrong adjustment may cause machine damage.**

■ **Check**

1. Place the motion control levers to **"NEUTRAL LOCK"** position.
2. Be sure to chock the rear wheels.
3. Apply the parking brake to the notch.
4. Check the length of the brake springs on both sides.

| | | |
|---|---|---|
| Proper brake spring length **(B)** with the brake applied to the notch **(A)** | Factory spec. | 70 mm<br>2.76 in. |

5. Release the parking brake.
6. Pull the brake rod fully forward by hand and hold.
7. Check the brake spring play.

| | | |
|---|---|---|
| Proper brake spring play **(C)** | Factory spec. | 1.0 to 2.0 mm<br>0.04 to 0.08 in. |

8. If these dimensions are not correct, adjust.

(1) Brake Rod

**(A) Notch**
**(B) Parking Brake Spring Length**
**(C) Brake Spring Play**
**(D) Pull the Brake Rod**

W1059278

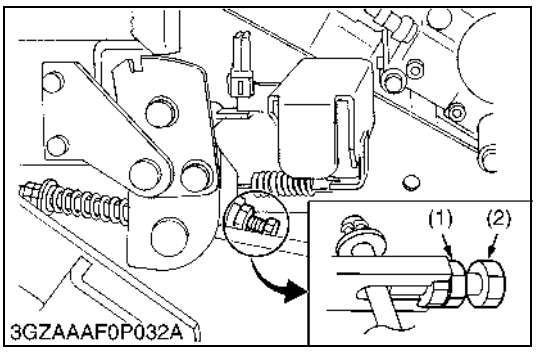


■ **Adjustment of brake spring play**

1. Place the motion control lever to **"NEUTRAL LOCK"** position.
2. Be sure to chock the rear wheels.
3. Release the parking brake.
4. Loosen the lock nuts.
5. Pull the brake rod fully forward by hand and hold.
6. Tighten the nut to the correct space between the end of the spring and the plain washer.
7. Lock the nuts.
8. Adjust the other side spring to the same dimension.

■ **Adjustment of brake length**

1. Place the motion control lever to **"NEUTRAL LOCK"** position.
2. Apply the parking brake to the notch.
3. Loosen the lock nuts.
4. Adjust the spring length to the recommendation.
5. Lock the nuts.
6. Check the brake spring play to the recommendation.
   If there is no play, adjust the brake spring play again.
7. Adjust the other side spring to the same dimension.

■ **Check the play of parking brake lock pedal**

1. Place the motion control levers to **"NEUTRAL LOCK"** position.
2. Be sure to chock the rear wheels.
3. Release the parking brake completely.
4. Check that parking brake release lever moves at the same time as the parking brake lock pedal is depressed.
5. If parking brake release lever does not move momentarily, adjust.

■ **Adjustment of parking brake lock pedal play**

1. Place the motion control lever to **"NEUTRAL LOCK"** position.
2. Be sure to chock the rear wheels.
3. Release the parking brake completely.
4. Loosen the lock nuts (1).
5. Adjust bolt (2) just to eliminate parking brake lock pedal play then lock the nut (1) to secure.

(1) Lock Nut (2) Bolt

W1036954

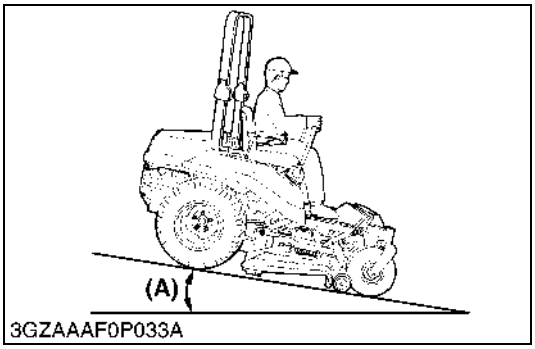


■ **Check on the slope**

1. Place the machine on a 17° ramp.
2. Apply the parking brake.
3. Place the motion control levers in **"NEUTRAL LOCK"** position and shut off the engine.
4. Check that the machine does not move.

■ **NOTE**

- **For parking brake test purposes only use 17° ramp.**

**(A) Under 17° Ramp**

W1037508

# [7] CHECK POINTS OF EVERY 150 HOURS

**Changing Mower Gear Box Oil**

1. See page G-25.

W1036280

# [8] CHECK POINTS OF EVERY 200 HOURS

**Adjusting Front Axle Pivot**

1. See page G-18.

W1064227

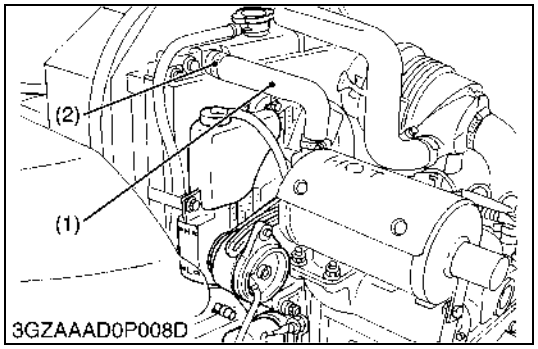


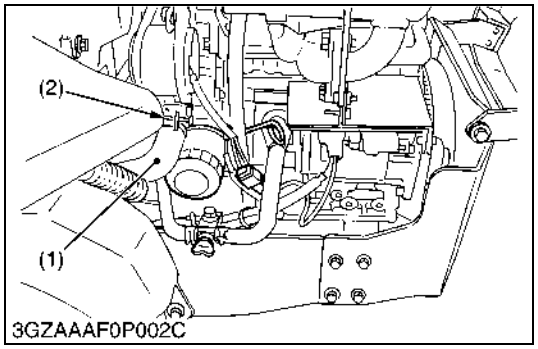


**Checking Radiator Hose and Clamp**

■ **NOTE**
- **Check to see if the radiator hoses are properly fixed every 200 hours of operation or 6 months, whichever comes first.**

1. If clamp bands (2) are loose or water leaks, tighten clamp band (2) securely.
2. Replace radiator hoses (1) and tighten clamp bands (2) securely, if radiator hoses (1) are swollen, hardened or cracked.
   Replace radiator hoses (1) and clamp bands (2) every 2 years or earlier if checked and found that hoses are swollen, hardened or cracked.

■ **NOTE**
- **Take the following actions in the event the coolant temperature be nearly or more than the boiling point, what is called "Overheating".**
- **Park the machine in a safe place and keep the engine unloaded idling.**
- **Don't stop the engine suddenly, but stop it after about 5 minutes of unloaded idling**
- **Keep yourself well away from the machine for further 10 minutes or while the steam is blown out.**
- **Checking that there gets no danger such as burning, get rid of the causes of overheating and then start the engine again.**

(1) Radiator Hose (2) Clamp Band

W1036392

**Changing Engine Oil Filter Cartridge**

1. See page G-17.

W1061492

**Changing Trasmission Fluid**

1. See page G-19.

W1035697

**Replacing Transmission Oil Filter Cartridge**

1. See page G-18.

W1061793

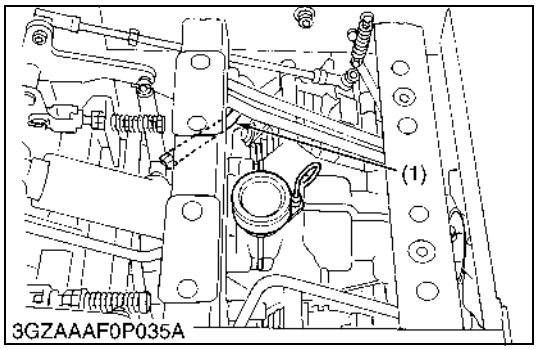


**Checking Hydraulic Hose**

**CAUTION**

**To avoid personal injury:**
- **Be sure to stop the engine and remove the key before checking and replacing hydraulic hose.**
- **Allow transmission case to cool down sufficiently; oil can be hot and may cause burns.**

1. Check to see the hose is tight and not damaged.
2. If the worn or damaged of the hose is found, replace it..

(1) Mower Lift Cylinder Hose

W1036641

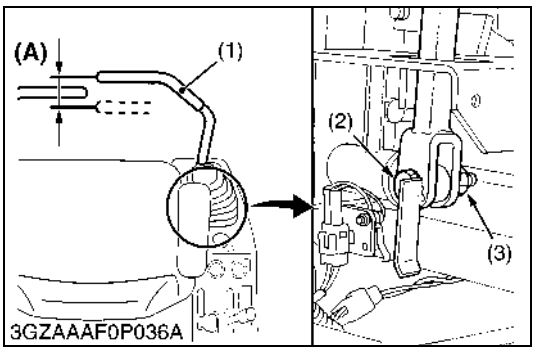


## Adjusting the Motion Control Lever Pivot

**CAUTION**

**To avoid personal injury:**

- **Be sure to stop the engine and set the parking brake to "ON" before checking.**

| | | |
|---|---|---|
| Lever free travel **(A)** | Factory spec. | 2 to 15 mm<br>0.08 to 0.59 in. |

1. Set the motion control lever (1) in the **"NEUTRAL"** position.
2. Slightly move the lever back and forth and measure the free travel at the top of lever stroke.
3. If the free travel limits are exceeded, remove the fender and retighten the nut (3) to specified torque.

■ **NOTE**

- **If the motion control lever pivot bolt (2) is maladjusted, speed control may be difficult.**

| | | |
|---|---|---|
| Tightening torque | Pivot bolt | 18.6 to 20.6 N·m<br>1.9 to 2.1 kgf·m<br>13.7 to 15.2 ft-lbs |

(1) Motion Control Lever
(2) Bolt
(3) Nut
**(A) Free Travel**

W1063124

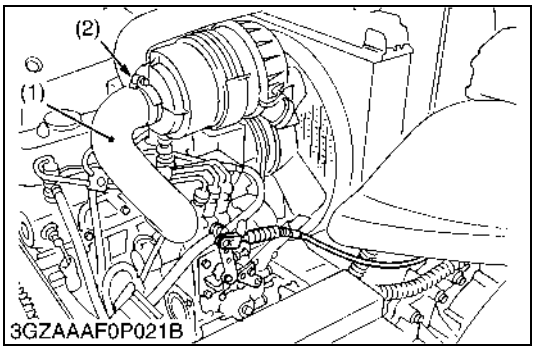


## Checking Intake Air Line

1. Check to see that hoses and hose clamps are tight and not damaged.
2. If hoses and clamps are found worn or damaged, replace or repair them at once.

(1) Hose
(2) Clamp

W1037686

## Adjusting Front Axle Pivot

1. See page G-18.

W1039874

# [9] CHECK POINTS OF EVERY 400 HOURS

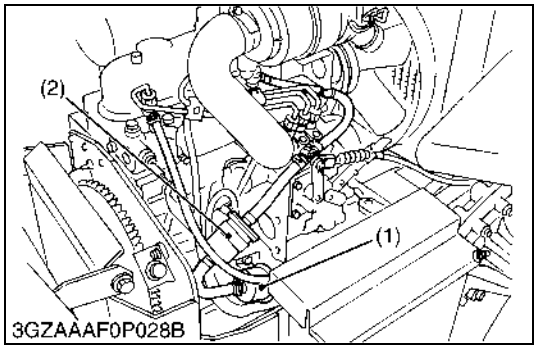


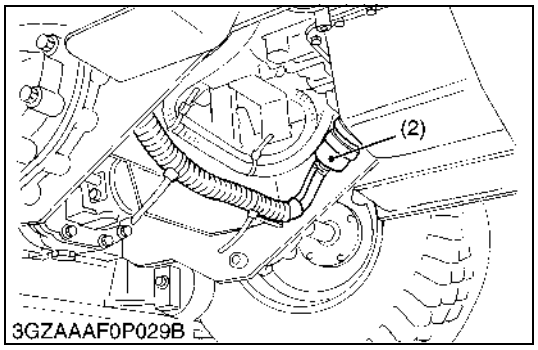


**Replacing Fuel Filter**

1. Disconnect the fuel hoses and loosen the filter band to replace the fuel filter (2).

■ **NOTE**

- **If the fuel line is removed, be sure to properly bleed the fuel system. (See page G-37.)**

(1) Fuel Pump
(2) Fuel Filter

W1037174

# [10] CHECK POINTS OF EVERY 1 YEAR

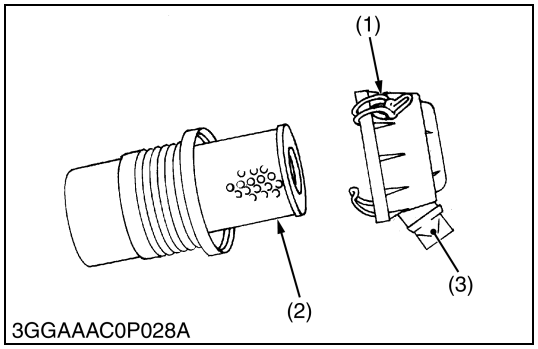


**Replacing Air Cleaner Element**

1. Remove the air cleaner element (2) once a year.

■ **IMPORTANT**

- **The air cleaner uses a dry element, never apply oil.**
- **Do not run the engine with filter element removed.**
- **Be sure to refit the air cleaner cover (1) as shown in the figure. If the air cleaner cover (1) is improperly fitted, evacuator valve (3) will not function and dust will adhere to the element.**
- **If it is loose, dust and dirt may be sucked in, wearing down the cylinder and piston rings earlier and thereby resulting in poor power output.**

(1) Air Cleaner Cover
(2) Air Cleaner Element
(3) Evacuator Valve

W1037268

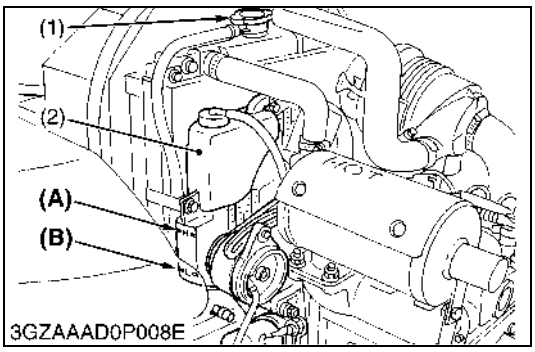


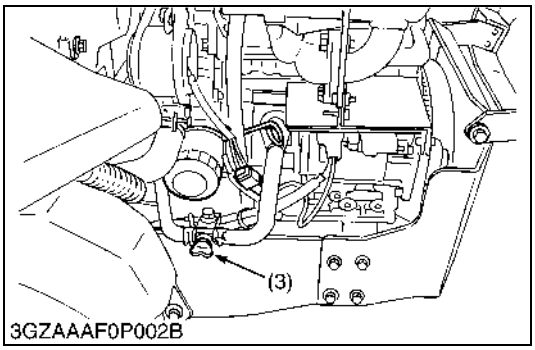


## Flushing Cooling System and Changing Coolant

**CAUTION**

- **Do not remove the radiator cap when the engine is hot. Then loosen cap slightly to the stop to relieve any excess pressure before removing cap completely.**

1. Stop the engine and let cool down.
2. To drain the coolant, open the radiator drain cock (3) and remove the radiator cap (1). The radiator cap (1) must be removed to completely drain the coolant.
3. After all coolant is drained, close the drain cock (3).
4. Fill with clean water and cooling system cleaner.
5. Follow directions of the cleaner instruction.
6. After flushing, fill with clean water and anti-freeze until the coolant level is just below the port. Install the radiator cap (1) securely.
7. Fill with coolant up to **"FULL"** mark on the recovery tank.
8. Start and operate the engine for a few minutes.
9. Stop the engine and let cool. Check coolant level of recovery tank (2) and add coolant if necessary.

**■ IMPORTANT**

- **Do not start engine without coolant.**
- **Use clean, fresh water and anti-freeze to fill the radiator and recovery tank.**
- **When the anti-freeze is mixed with water, the anti-freeze mixing ratio must be less than 50 %.**
- **Securely tighten radiator cap. If the cap is loose or improperly fitted, water may leak out and the engine could overheat.**
- **Refer to "LUBRICANTS, FUEL AND COOLANT". (See page G-7.)**

| | | |
|---|---|---|
| Coolant capacity | Cooling system | 4.0 L<br>4.2 U.S.qts.<br>3.5 Imp.qts. |
| | Recovery tank | 0.25 L<br>0.26 U.S.qts.<br>0.22 Imp.qts. |

(1) Radiator Cap
(2) Recovery Tank
(3) Drain Cock

**A: FULL**
**B: LOW**

W1037402

## Flushing Cooling System and Changing Coolant (Continued)

### ■ Anti-Freeze

If coolant freezes, the cylinders and radiator can be damaged. It is necessary, if the ambient temperature falls below 0 °C (32 °F), to remove coolant mix it with anti-freeze and full the radiator with it.

1. There are two types of anti-freeze available; use the permanent type (PT) for this engine.
2. Before adding anti-freeze for the first time, clean the radiator interior by pouring fresh water and draining it a few times.
3. The procedure for mixing of water and anti-freeze differs according to the maker of the anti-freeze and the ambient temperature, basically should be referred to SAE J1034, more specially also to SAE J814c.
4. Mix the anti-freeze with water, and then fill in to the radiator.

| Vol % Anti-freeze | Freezing Point | | Boiling Point* | |
|---|---|---|---|---|
| | °C | °F | °C | °F |
| 40 | – 24 | – 12 | 106 | 222 |
| 50 | – 37 | – 34 | 108 | 226 |

* At 101 kPa (760 mmHg) pressure (atmospheric). A higher boiling point is obtained by using a radiator pressure cap which permits the development of pressure within the cooling system.

### ■ NOTE

- **The above date represent industry standards that necessitate a minimum glycol content in the concentrates anti-freeze.**
- **When the coolant level drops due to evaporation, add water only. In case of leakage, add anti-freeze and water in the specified mixing ratio.**
- **Anti-freeze absorbs moisture. Keep unused anti-freeze in a tightly sealed container.**
- **Do not use radiator cleaning agents when anti-freeze has been added to the coolant. (Anti-freeze contains an anti-corrosive agent, which will react with the radiator cleaning agent forming sludge which will affect the engine parts.)**

W1037674

# [11] CHECK POINT OF EVERY 2 YEARS

**Replacing Hydraulic Hose**

1. Replace the hose.
   Refer to “Checking Hydraulic Hose”. (See page G-30.)

W1067327

**Replacing Radiator Hose**

1. Replace the hoses and clamps.
   Refer to “Checking Radiator Hose and Hose Clamp”. (See page G-30.)

W1067436

**Replacing Fuel Lines**

1. Replace the fuel line.
   Refer to “Checking Fuel Lines and Fuel Filter”. (See page G-27.)

W1082371

**Replacing Intake Air Line**

1. Replace the intake air line.
   Refer to “Checking Intake Air Line”. (See page G-31.)

W1052932

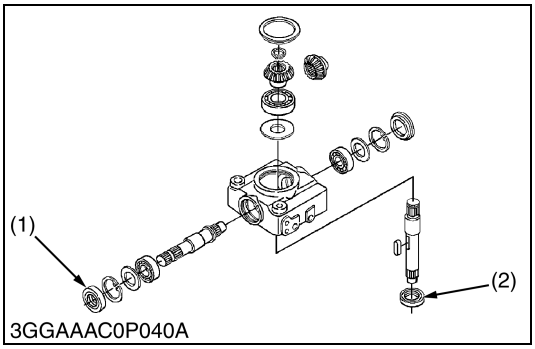


**Replacing Mower Gear Box Seals**

1. Replace the mower gear box oil seals (1), (2).
   Refer to “Disassembling Gear Box Assembly”. (See page 6-S8.)

(1) Oil Seal (2) Oil Seal

W1038357

# [12] OTHERS

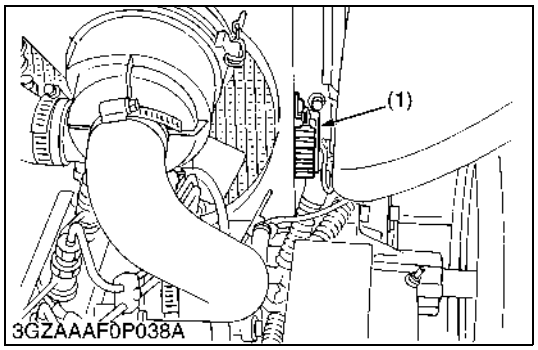


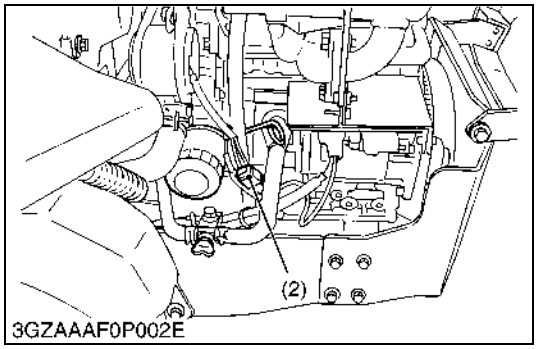


## Replacing Fuses

1. The electrical system is protected from potential damage by fuses.
   A blown fuse indicates that there is an overload or short somewhere in the electrical system.
2. If any of the fuses should blow, replace with a new one of the same capacity.

■ **IMPORTANT**

- **Before replacing a blown fuse, determine why the fuse blew and make any necessary repairs. Failure to follow this procedure may result in serious damage to the electrical system.**

■ **Protected Circuit**

| FUSE NO. (ID LABEL) | CAPACITY (A) | Protected circuit |
|---|---|---|
| 1 | 20A | Engine stop |
| | 15A | Charge system |
| | 15A | Aux. outlet |
| | 15A | Main system |
| | 10A | Control system |
| 2 | Slow blow fuse 40 A | Check circuit against wrong battery connection |

(1) Fuse (2) Slow Blow Fuse

W1038470

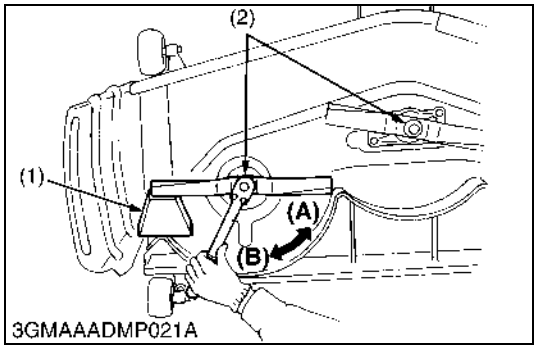


## Retightening Mower Blade Screw

**CAUTION**

- **To avoid injury, always handle the mower blade with care.**

1. Tilt up the mower and turn it over to expose the mower blades.
2. Wedge a wooden block (1) securely between the mower blade and mower deck.
3. Retighten the mower blade screw to the specified torque.
4. If the mower blade screw (2) is worn or broken, replace it.

■ **NOTE**

- **The screw of the red-painted mower blade is of inverse helical type.**

| | | |
|---|---|---|
| Tightening torque | Mower blade screw | 98.0 to 117.6 N·m<br>10.0 to 12.0 kgf·m<br>72.0 to 86.8 ft-lbs |

(1) Wooden Block **(A) Loosen**
(2) Mower Blade Screw **(B) Tighten**

W1022525

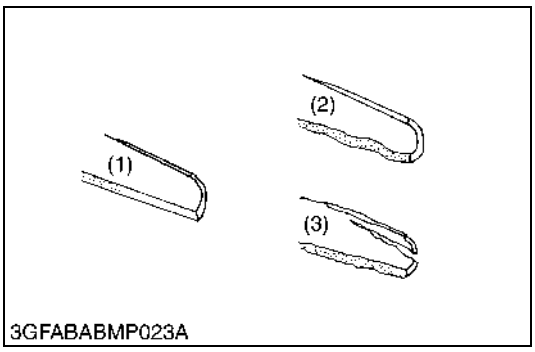


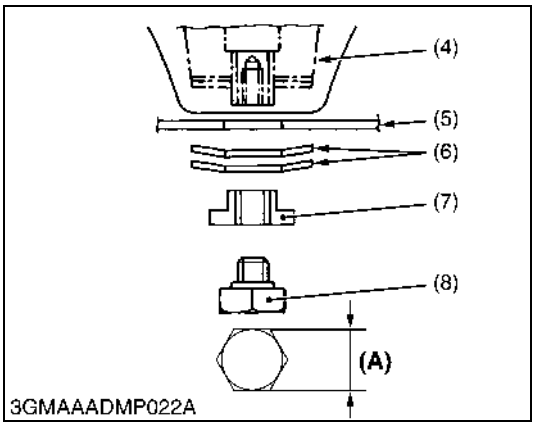


## Checking Mower Blade and Replacing Mower Blade

1. Check the cutting edge of mower blade.
2. Sharpen the cutting edges, if the mower blades are as shown in figure (2).
3. Replace the mower blades, if they are as shown in figure (3).

■ **NOTE**

- **To sharpen the mower blades by yourself, clamp the mower blade securely in a vise and use a large mill file along the original bevel.**
- **To balance the mower blade, place a small rod through the center hole and check to see if the blade balances evenly. File heavy side of the blade until it balance out even.**

4. Tilt up the mower deck.
5. Wedge a wooden block securely between the mower blade and mower deck or use a box wrench over the pulley nut to prevent the spindle from rotating while removing the blade bolts; then loosen the blade bolts.
6. Pass the spline boss through the blade (5) and 2 cup washers (6), and tighten the bolt (8).

■ **NOTE**

- **Make sure that the cup washer is not flattened out or worn; this cause blade to slip excessively.**
  **Replace the 2 cup washers if either is damaged.**

(1) New Blade
(2) Worn Blade
(3) Cracked Blade
(4) Spindle Holder
(5) Blade
(6) 2 Cup Washers
(7) Lock Washer
(8) Bolt
**(A) 30 mm (1-3/16 in.)**

W1022841

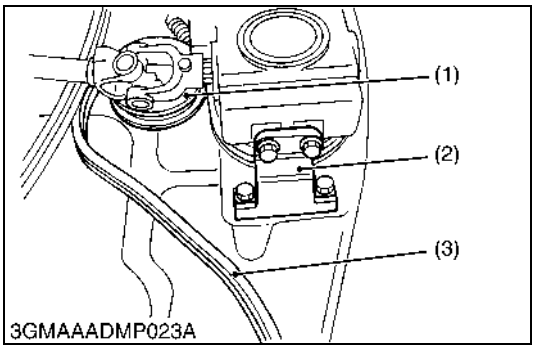


## Replacing Mower Belt

1. Remove the mower deck from the machine.
2. Remove the left and right hand shield from the mower deck.
3. Clean around the gear box.
4. Remove the belt from the tension pulley.
5. Remove the right hand bracket which mounts the gear box to the mower deck and slip the belt over the top of the gear box.
6. To install a new belt, reverse the above procedure.

| | | |
|---|---|---|
| Tightening torque | Bracket mounting screw | 27.6 to 90.2 N·m<br>8.0 to 9.2 kgf·m<br>57.1 to 66.5 ft-lbs |

(1) Tension Pulley
(2) Bracket (RH)
(3) Belt

W1069194

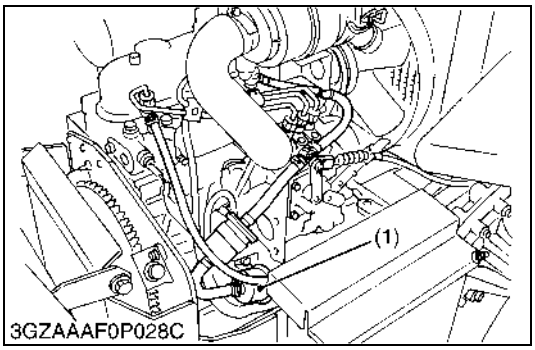


## Bleeding Fuel System

**Air must be removed:**

1. When the fuel filter or lines are removed.
2. When tank is completely empty.
3. After the tractor has not been used for a long period of time.

**Bleeding procedure is as follows:**

1. Fill the fuel tank with fuel.
2. Turn the key switch to **"ON"** position for about 30 seconds. Doing so allows fuel pump to work and pump air out of the fuel system.
3. Start the engine and run for about 30 seconds, and then stop the engine.

(1) Fuel Pump

W1069400

# 8. SPECIAL TOOLS

## [1] SPECIAL TOOLS FOR ENGINE

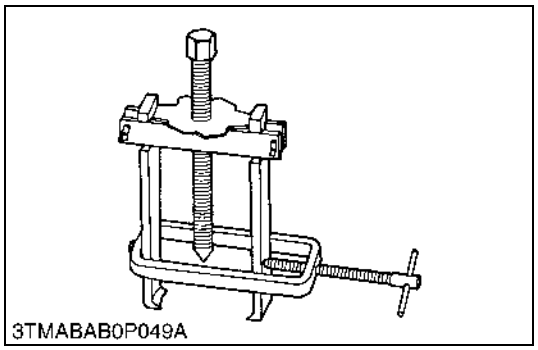


**Special Use Puller Set**

Code No: 07916-09032

Application: Use exclusively for pushing out bearing, gears and other parts with ease.

W1048293

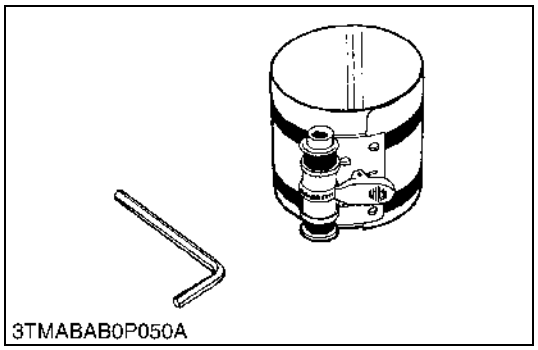


**Piston Ring Compressor**

Code No: 07909-32111

Application: Use exclusively for pushing in the piston with piston rings into the cylinder.

W1048361

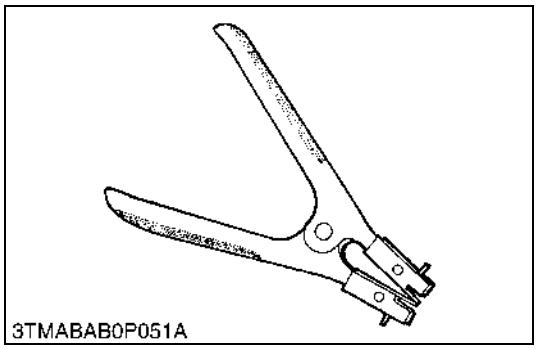


**Piston Ring Tool**

Code No: 07909-32121

Application: Use exclusively for removing or installing the piston ring with ease.

W1048421

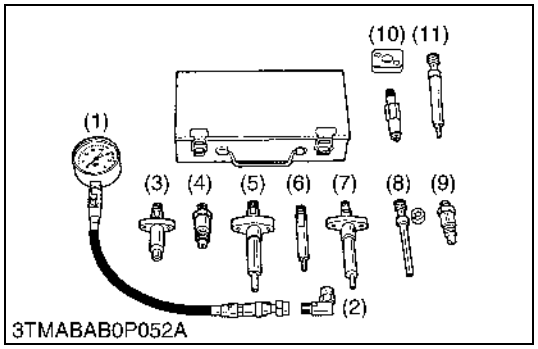


**Diesel Engine Compression Tester**

Code No: 07909-30208 (Assembly) 07909-31251 (G)
07909-30934 (A to F) 07909-31271 (I)
07909-31211 (E and F) 07909-31281 (J)
07909-31231 (H)

Application: Use to measure diesel engine compression and diagnostics of need for major overhaul.

(1) Gauge
(2) **L** Joint
(3) Adaptor **A**
(4) Adaptor **B**
(5) Adaptor **C**
(6) Adaptor **E**
(7) Adaptor **F**
(8) Adaptor **G**
(9) Adaptor **H**
(10) Adaptor **I**
(11) Adaptor **J**

W1048481

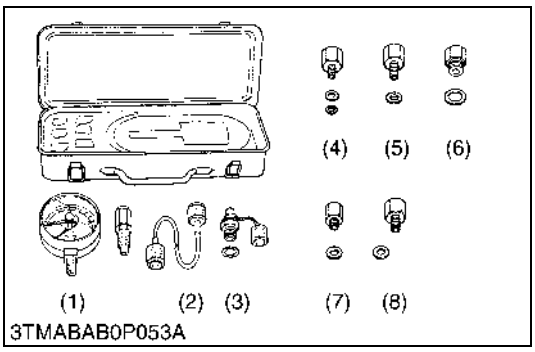


**Oil Pressure Tester**

Code No: 07916-32032
Application: Use to measure lubricating oil pressure.

(1) Gauge
(2) Cable
(3) Threaded Joint
(4) Adaptor 1
(5) Adaptor 2
(6) Adaptor 3
(7) Adaptor 4
(8) Adaptor 5

W1048722

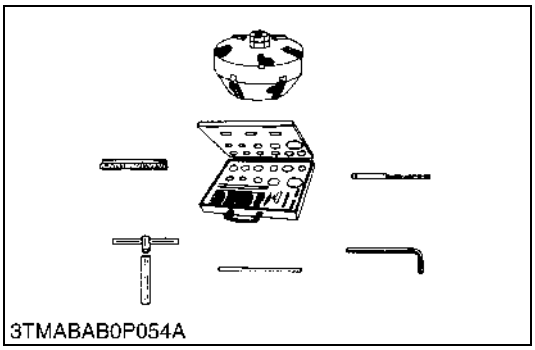


**Valve Seat Cutter**

Code No: 07909-33102
Application: Use to reseat valves.
Angle: 0.785 rad. (45 °)
0.262 rad. (15 °)
Diameter: 28.6 mm (1.126 in.)
31.6 mm (1.244 in.)
35.0 mm (1.378 in.)
38.0 mm (1.496 in.)
41.3 mm (1.626 in.)
50.8 mm (2.000 in.)

W1048944

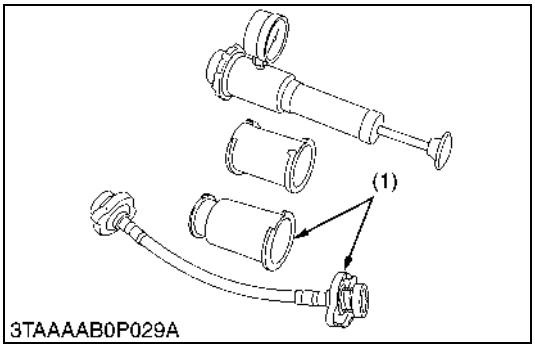


**Radiator Tester**

Code No: 07909-31551
Application: Use to check of radiator cap pressure, and leaks from cooling system.
Remarks: Adapter (1) BANZAI Code No. RCT-2A-30S

W1049045

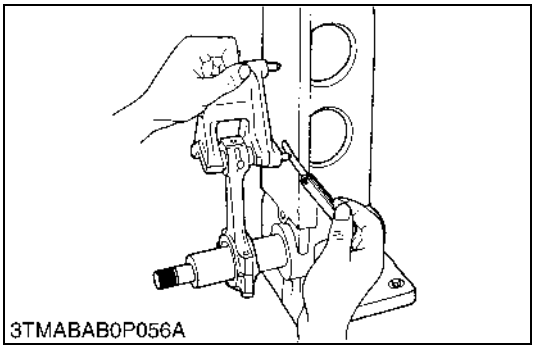


**Connecting Rod Alignment Tool**

Code No: 07909-31661
Application: Use to check the connecting rod alignment.
Applicable: Connecting rod big end I.D.
range 30 to 75 mm (1.18 to 2.95 in.) dia.
Connecting rod length
65 to 300 mm (2.57 to 11.81 in.)

W1049118

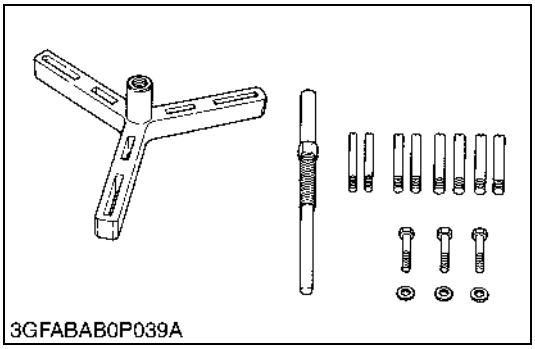


**Flywheel Puller**

Code No: 07916-32011
Application: Use exclusively for removing the flywheel with ease.

W1049723

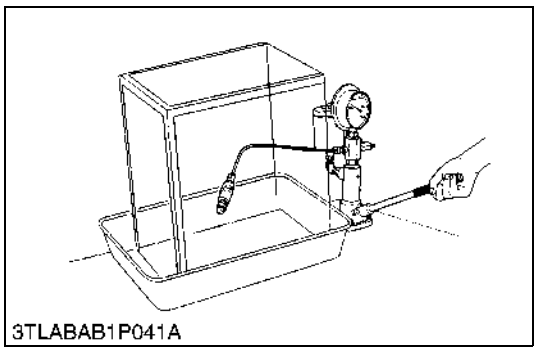


**Nozzle Tester**

Code No: 07909-31361
Application: Use to check the fuel injection pressure and spray pattern of nozzle.
Measuring range: 0 to 50 MPa (0 to 500 kgf/cm$^2$, 0 to 7000 psi)

W1049783

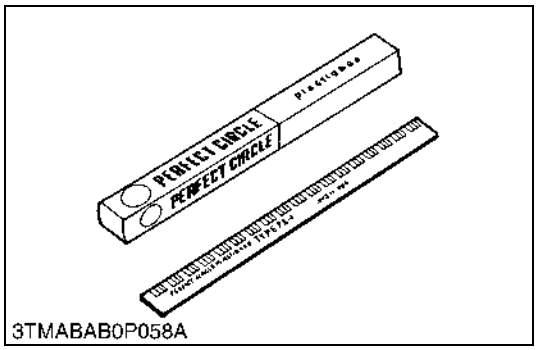


**Plastigage**

Code No: 07909-30241
Application: Use to check the oil clearance between crankshaft and bearing, etc..
Measuring range: Green.....0.025 to 0.076 mm (0.001 to 0.003 in.)
Red.....0.051 to 0.152 mm (0.002 to 0.006 in.)
Blue.....0.102 to 0.229 mm (0.004 to 0.009 in.)

W1049942

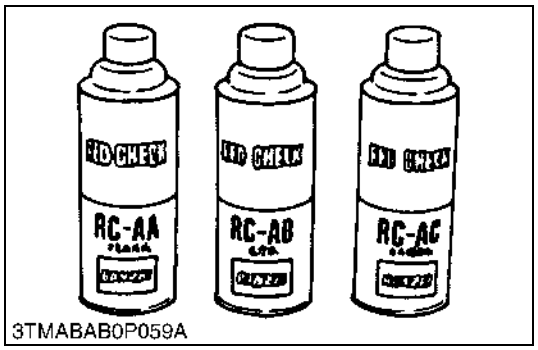


**Red Check**

Code No: 07909-31371
Application: Use to check cracks on cylinder head, cylinder block, etc..

W1050024

■ **NOTE**

- **The following special tools are not provided, so make them referring to the figure.**

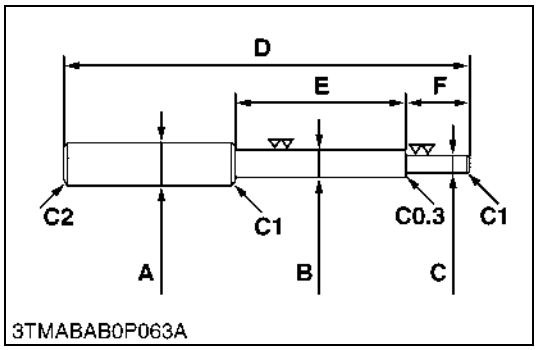


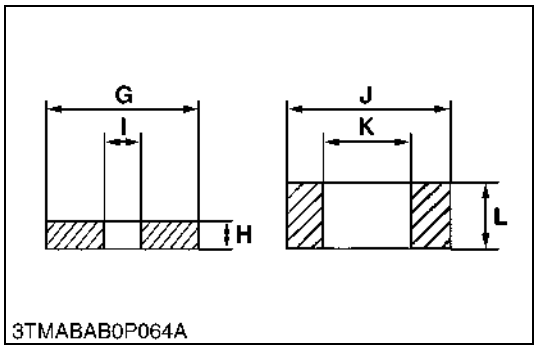


**Valve Guide Replacing Tool**

Application: Use to press out and press fit the valve guide.

| | |
|---|---|
| A | 20 mm dia. (0.79 in. dia.) |
| B | 11.7 to 11.9 mm dia. (0.460 to 0.468 in. dia.) |
| C | 6.5 to 6.6 mm dia. (0.256 to 0.259 in. dia.) |
| D | 225 mm (8.86 in.) |
| E | 70 mm (2.76 in.) |
| F | 45 mm (1.77 in.) |
| G | 25 mm (0.98 in.) |
| H | 5 mm (0.197 in.) |
| I | 6.7 to 7.0 mm dia. (0.263 to 0.275 in. dia.) |
| J | 20 mm dia. (0.787 in. dia.) |
| K | 12.5 to 12.8 mm dia. (0.482 to 0.504 in. dia.) |
| L | 8.9 to 9.1 mm (0.350 to 0.358 in.) |
| C1 | Chamfer 1.0 mm (0.039 in.) |
| C2 | Chamfer 2.0 mm (0.079 in.) |
| C0.3 | Chamfer 0.3 mm (0.012 in.) |

W1050106

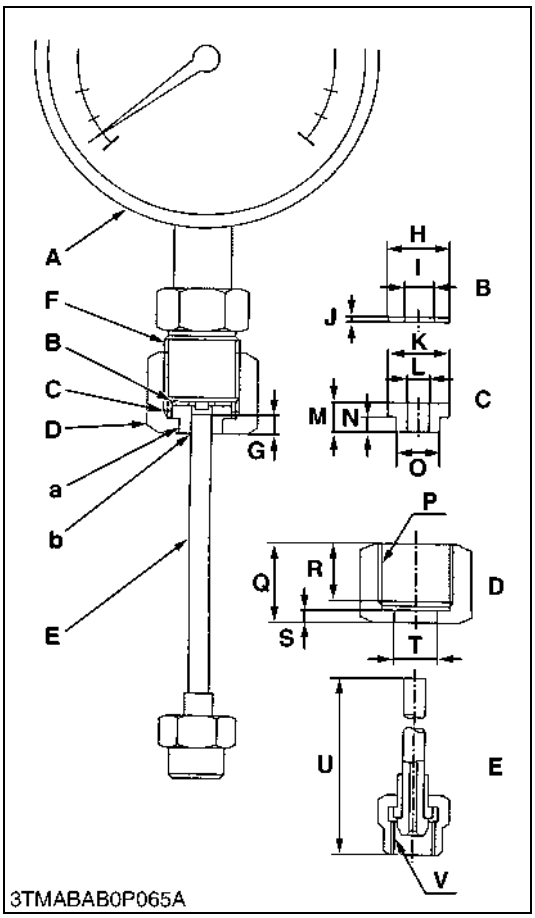


## Injection Pump Pressure Tester

Application: Use to check fuel tightness of injection pumps.

| | |
|---|---|
| A | Pressure gauge full scale: More than 29.4 MPa (300 kgf/cm$^2$, 4267 psi) |
| B | Copper gasket |
| C | Flange (Material: Steel) |
| D | Hex. nut 27 mm (1.06 in.) across the plat |
| E | Injection pipe |
| F | PF1/2 |
| G | 5 mm (0.20 in.) |
| H | 17 mm dia. (0.67 in. dia.) |
| I | 8 mm dia. (0.31 in. dia.) |
| J | 1.0 mm (0.039 in.) |
| K | 17 mm dia. (0.67 in. dia.) |
| L | 6.10 to 6.20 mm dia. (0.2402 to 0.2441 in. dia.) |
| M | 8 mm (0.31 in.) |
| N | 4 mm (0.16 in.) |
| O | 11.97 to 11.99 mm dia. (0.4713 to 0.4721 in. dia.) |
| P | PF1/2 |
| Q | 23 mm (0.91 in.) |
| R | 17 mm (0.67 in.) |
| S | 4 mm (0.16 in.) |
| T | 12.00 to 12.02 mm dia. (0.4724 to 0.4732 in. dia.) |
| U | 100 mm (3.94 in.) |
| V | M12 × P1.5 |
| a | Adhesive application |
| b | Fillet welding on the enter circumference |

W1050289

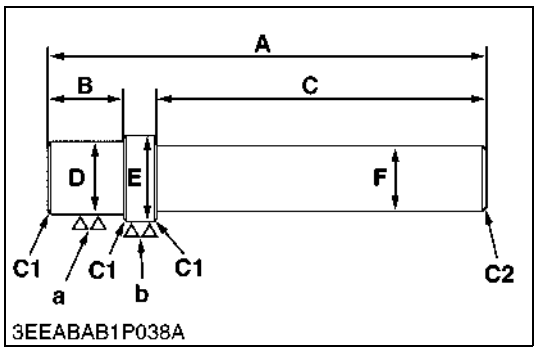


## Bushing Replacing Tool

Application: Use to press out and to press fit the bushing.

1. For small end bushing

| | |
|---|---|
| A | 157 mm (6.1811 in.) |
| B | 24 mm (0.9449 in.) |
| C | 120 mm (4.7244 in.) |
| D | 21.8 to 21.9 mm dia. (0.8583 to 0.8622 in. dia.) |
| E | 24.8 to 24.9 mm dia. (0.9764 to 0.9803 in. dia.) |
| F | 20 mm dia. (0.7874 in. dia.) |
| a | 6.3 μ m (250 μ in.) |
| b | 6.3 μ m (250 μ in.) |

2. For idle gear bushing

| | |
|---|---|
| A | 196 mm (7.7165 in.) |
| B | 26 mm (1.0236 in.) |
| C | 150 mm (5.9055 in.) |
| D | 25.8 to 25.9 mm dia. (1.0157 to 1.0197 in. dia.) |
| E | 28.8 to 28.9 mm dia. (1.1339 to 1.1377 in. dia.) |
| F | 20 mm dia. (0.7874 in. dia.) |
| a | 6.3 μ m (250 μ in.) |
| b | 6.3 μ m (250 μ in.) |

W1050660

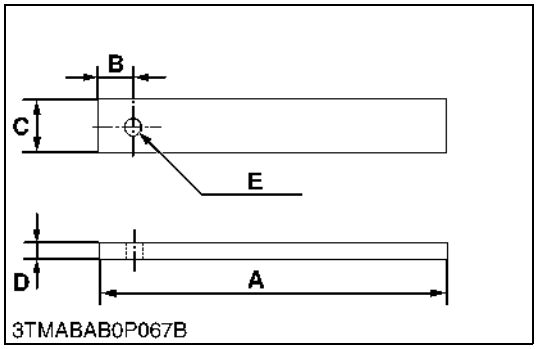


## Flywheel Stopper

Application: Use to loosen and tighten the flywheel screw.

| | |
|---|---|
| A | 200 mm (7.87 in.) |
| B | 20 mm (0.79 in.) |
| C | 30 mm (1.18 in.) |
| D | 8 mm (0.31 in.) |
| E | 10 mm dia. (0.39 in. dia.) |

W1050819

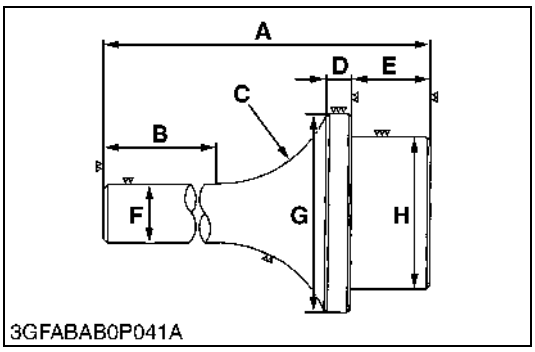


## Crankshaft Bearing 1 Replacing Tool

Application: Use to press out and to press fit the crankshaft bearing 1.

### [Press Out]

| | |
|---|---|
| A | 135 mm (5.31 in.) |
| B | 72 mm (2.83 in.) |
| C | 1.57 rad. (40°) |
| D | 10 mm (0.39 in.) |
| E | 22 mm (0.87 in.) |
| F | 20 mm dia. (0.79 in. dia.) |
| G | 56.80 to 56.90 mm dia. (2.2362 to 2.2402 in. dia.) |
| H | 51.80 to 51.90 mm dia. (2.0393 to 2.0433 in. dia.) |

### [Press Fit]

| | |
|---|---|
| A | 130 mm (5.12 in.) |
| B | 72 mm (2.83 in.) |
| C | 1.57 rad. (40°) |
| D | 9 mm (0.35 in.) |
| E | 24 mm (0.95 in.) |
| F | 20 mm dia. (0.79 in. dia.) |
| G | 68 mm dia. (0.79 in. dia.) |
| H | 47.38 to 47.48 mm dia. (1.865 to 1.869 in. dia.) |

W1051113

# [2] SPECIAL TOOLS FOR MACHINE

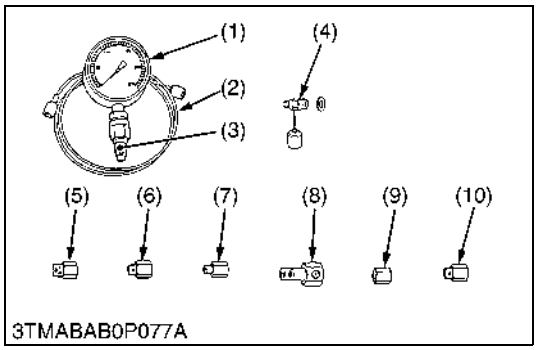


**Relief Valve Pressure Tester**

Code No: 07916-50045

Application: This allows easy measurement of relief set pressure.

(1) Gauge (07916-50322)
(2) Cable (07916-50331)
(3) Threaded Joint (07916-50401)
(4) Threaded Joint (07916-50341)
(5) Adaptor **B** (M18 × P1.5) (07916-50361)
(6) Adaptor **C** (PS3/8) (07916-50371)
(7) Adaptor **D** (PT1/8) (07916-50381)
(8) Adaptor **E** (PS3/8) (07916-50392)
(9) Adaptor **F** (PF1/2) (07916-62601)
(10) Adaptor **58** (PT1/4) (07916-52391)

W1051907

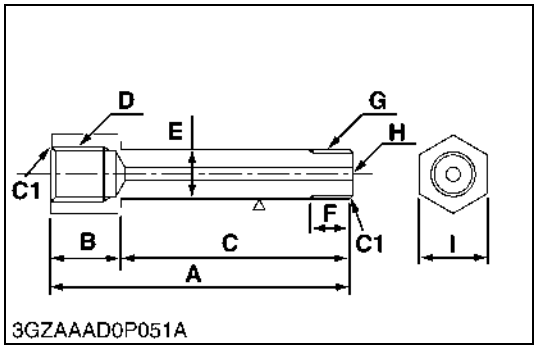


**HST Relief Valve Adaptor**

Application: This adaptor is used to measure the HST relief valve pressure.

| | |
|---|---|
| A | 80 mm (3.15 in.) |
| B | 20 mm (0.79 in.) |
| C | 60 mm (2.36 in.) |
| D | G 1/4 × 15 mm (0.59 in.) |
| E | 12 mm (0.47 in.) |
| F | 13 mm (0.51 in.) |
| G | G 1/4 |
| H | 3 mm dia. (0.118 in. dia.) |
| I | 19 mm (0.75 in.) |
| C1 | Chamfer 1.0 mm (0.039 in.) |

W1040355

# 7-1 ENGINE

# SERVICING

## CONTENTS

# 1. TROUBLESHOOTING

| Symptom | Probable Cause | Solution | Reference Page |
|---|---|---|---|
| **Engine Does Not Start** | • No fuel | Replenish fuel | – |
| | • Air in the fuel system | Bleed fuel system | – |
| | • Water in the fuel system | Change fuel and replace fuel system | – |
| | • Fuel pipe clogged | Clean fuel pipe | – |
| | • Fuel filter clogged | Replace fuel filter | G-32 |
| | • Excessively high viscosity of fuel or engine oil at low temperature | Use specified fuel or engine oil | G-7 |
| | • Fuel with low cetane number | Use specified fuel | G-7 |
| | • Fuel leak due to loose injection pipe retaining nut | Tighten retaining nut | 1-S18 |
| | • Incorrect injection timing | Adjust injection timing | – |
| | • Fuel camshaft worn | Replace fuel camshaft | 1-S22 |
| | • Injection nozzle clogged | Clean injection nozzle | – |
| | • Injection pump malfunctioning | Repair or replace injection pump | 1-S22 |
| | • Seizure of crankshaft, camshaft, piston, cylinder or bearing | Replace crankshaft, camshaft, piston, cylinder or bearing | 1-S23, S25, S28 |
| | • Compression leak from cylinder | Replace head gasket, tighten cylinder head screw, glow plug and nozzle holder | 1-S19 |
| | • Improper valve timing | Correct valve timing | 1-S23 |
| | • Piston ring and cylinder worn | Replace piston ring | 1-S26 |
| | • Excessive valve clearance | Adjust valve clearance | 1-S17 |
| **(Starter Does Not Run)** | • Battery discharged | Charge battery | G-26 |
| | • Starter malfunctioning | Repair or replace starter | 5-S12 |
| | • Slow blow fuse blown | Replace slow blow fuse | G-36 |
| | • Main switch malfunctioning | Repair or replace main switch | 5-S8 |
| | • PTO switch defective | Replace PTO switch | 5-S10 |
| | • Parking brake switch defective | Replace brake switch | 5-S10 |
| | • Motion control lever switch defective | Replace reverse switch or adjust reverse switch gap | 5-S10 |
| | • Seat switch defective | Replace seat switch | 5-S10 |
| | • Wiring harness disconnected | Connect wiring harness | – |

W1066187

| Symptom | Probable Cause | Solution | Reference Page |
|---|---|---|---|
| **Engine Revolution Is Not Smooth** | • Fuel filter clogged or dirty | Replace fuel filter | G-32 |
| | • Air cleaner clogged | Clean or replace air cleaner element. | G-24 |
| | • Fuel leak due to loose injection pipe retaining nut | Tighten retaining nut | 1-S18 |
| | • Injection pump malfunctioning | Repair or replace injection pump | 1-S22 |
| | • Incorrect nozzle injection pressure | Adjust nozzle injection pressure | – |
| | • Injection nozzle stuck or clogged | Repair or replace injection nozzle | 1-S52 |
| | • Governor malfunctioning | Repair governor | 1-S23 |
| **Either White or Blue Exhaust Gas Is Observed** | • Excessive engine oil | Reduce to specified engine oil level | – |
| | • Piston ring and cylinder worn or stock | Repair piston ring and bore oversize piston | 1-S26 |
| | • Incorrect injection timing | Adjust injection timing | – |
| | • Deficient compression | Replace each bearings | 1-S28, S37 |
| **Either Black or Dark Gray Exhaust Gas Is Observed** | • Overload | Lessen load | – |
| | • Low grade fuel used | Use specified fuel | – |
| | • Fuel filter clogged | Replace fuel filter | G-32 |
| | • Air cleaner clogged | Clean or replace air cleaner element | G-24 |
| | • Deficient nozzle injection | Repair or replace nozzle | 1-S52 |
| **Deficient Output** | • Incorrect injection timing | Adjust injection timing | – |
| | • Engine's moving parts seem to be seized. | Repair or replace engine’s moving parts | – |
| | • Uneven fuel injection | Repair or replace injection pump | 1-S22 |
| | • Deficient nozzle injection | Repair or replace nozzle | 1-S52 |
| | • Compression leak from cylinder | Replace head gasket, tighten cylinder head screws, glow plugs and nozzle holders. | 1-S19 |
| **Excessive Lubricant Oil Consumption** | • Piston ring’s gap facing the same direction | Shift ring gap direction | 1-S25 |
| | • Oil ring worn or stuck | Replace oil ring | 1-S26 |
| | • Piston ring groove worn | Replace piston | 1-S26 |
| | • Valve stem and valve guide worn | Replace valve and valve guide | 1-S20, S30 |
| | • Oil leaking due to defective seals or packing | Replace defective seals or packing | – |

W1010717

| Symptom | Probable Cause | Solution | Reference Page |
|---|---|---|---|
| **Fuel Mixed into Lubricant Oil** | • Injection pump's plunger worn | Replace pump element or injection pump | 1-S22 |
| | • Deficient nozzle injection | Repair or replace nozzle | 1-S52 |
| | • Injection pump broken | Replace injection pump | 1-S22 |
| **Water Mixed into Lubricant Oil** | • Head gasket defective | Replace head gasket | 1-S19 |
| | • Cylinder block or cylinder head flawed | Replace cylinder block or cylinder head | – |
| **Low Oil Pressure** | • Engine oil insufficient | Replenish engine oil | G-17 |
| | • Oil strainer clogged | Clean oil strainer | 1-S24 |
| | • Engine oil filter cartridge clogged | Change engine oil filter cartridge | G-17 |
| | • Relief valve stuck with dirt | Clean or replace relief valve | – |
| | • Relief valve spring weaken or broken | Replace relief valve spring | – |
| | • Excessive oil clearance of crankshaft bearing | Replace main bearings, metals or crankshaft | 1-S28 |
| | • Excessive oil clearance of crankpin bearing | Replace crankpin bearings | 1-S24 |
| | • Excessive oil clearance of rocker arm | Replace rocker arms, rocker arm brackets or rocker arm shaft. | 1-S19 |
| | • Oil passage clogged | Clean oil passage | – |
| | • Different type of oil | Use specified type of oil | – |
| | • Oil pump defective | Repair or replace oil pump | 1-S21 |
| **High Oil Pressure** | • Different type of oil | Use specified type of oil | G-7 |
| | • Relief valve defective | Replace relief valve | – |

W1012734

| Symptom | Probable Cause | Solution | Reference Page |
|---|---|---|---|
| **Engine Overheated** | • Engine oil insufficient | Replenish engine oil | G-17 |
| | • Fan belt broken or tensioned improperly | Replace fan belt or adjust fan belt tension | G-27, 1-S14 |
| | • Coolant insufficient | Replenish coolant | – |
| | • Radiator net and radiator fin clogged with dust | Clean radiator net and radiator fin | – |
| | • Inside of radiator corroded | Clean inside of radiator or replace radiator | G-33 |
| | • Coolant flow route corroded | Clean or replace coolant flow route | G-33 |
| | • Radiator cap defective | Replace radiator cap | – |
| | • Overload running | Loosen load | – |
| | • Head gasket defective | Replace head gasket | 1-S19 |
| | • Incorrect injection timing | Adjust injection timing | – |
| | • Unsuitable fuel used | Use specified fuel | – |

W1013908

# 2. SERVICING SPECIFICATIONS [D1005-E2-ZD]

## [1] ENGINE BODY

| Item | | Factory Specification | Allowable Limit |
|---|---|---|---|
| Cylinder Head Surface | Flatness | – | 0.05 mm<br>0.0020 in. |
| Top Clearance | | 0.55 to 0.70 mm<br>0.0217 to 0.0276 in. | – |
| Compression Pressure (When Cranking with Starting Motor) | | 2.84 to 3.24 MPa<br>29 to 33 kgf/cm$^2$<br>412 to 469 psi | 2.26 MPa<br>23 kgf/cm$^2$<br>327 psi |
| Variance among Cylinders | | – | 10 % or less |
| Valve Clearance (Cold) | | 0.145 to 0.185 mm<br>0.0057 to 0.0072 in. | – |
| Valve Seat | Width | 2.12 mm<br>0.0835 in. | – |
| Valve Seat | Angle (Intake) | 1.047 rad<br>60° | – |
| | Angle (Exhaust) | 0.785 rad<br>45° | – |
| Valve Face | Angle (Intake) | 1.047 rad<br>60° | – |
| | Angle (Exhaust) | 0.785 rad<br>45° | – |
| Valve Recessing | | – 0.05 to 0.15 mm<br>– 0.0020 to 0.0059 in. | 0.40 mm<br>0.0157 in. |
| Valve Stem to Valve Guide | Clearance | 0.035 to 0.065 mm<br>0.0014 to 0.0026 in. | 0.10 mm<br>0.0039 in. |
| Valve Stem | O.D. | 6.960 to 6.975 mm<br>0.2740 to 0.2746 in. | – |
| Valve Guide | I.D. | 7.010 to 7.025 mm<br>0.27599 to 0.27657 in. | – |
| Valve Timing (Intake Valve) | Open | 0.24 rad (14°)<br>before T.D.C. | – |
| | Close | 0.52 rad (30°)<br>after B.D.C. | – |
| Valve Timing (Exhaust Valve) | Open | 0.96 rad (55°)<br>before B.D.C. | – |
| | Close | 0.24 rad (14°)<br>after T.D.C. | – |

W1015702

**ENGINE BODY (Continued)**

| Item | | Factory Specification | Allowable Limit |
|---|---|---|---|
| Valve Spring | Free Length | 37.0 to 37.5 mm<br>1.457 to 1.476 in. | 36.5 mm<br>1.437 in. |
| | Setting Load | 117.6 N<br>12.0 kgf<br>26.4 lbs | 100.0 N<br>10.2 kgf<br>22.5 lbs |
| | Setting Length | 31.0 mm<br>1.220 in. | – |
| | Tilt | – | 1.0 mm<br>0.039 in. |
| Rocker Arm Shaft to Rocker Arm | Clearance | 0.016 to 0.045 mm<br>0.0006 to 0.0018 in. | 0.10 mm<br>0.0039 in. |
| Rocker Arm Shaft | O.D. | 11.973 to 11.984 mm<br>0.4714 to 0.4718 in. | – |
| Rocker Arm | I.D. | 12.000 to 12.018 mm<br>0.4724 to 0.4732 in. | – |
| Push Rod | Alignment | – | 0.25 mm<br>0.0098 in. |
| Tappet to Tappet Guide | Clearance | 0.020 to 0.062 mm<br>0.00079 to 0.00244 in. | 0.07 mm<br>0.0028 in. |
| Tappet | O.D. | 19.959 to 19.980 mm<br>0.78579 to 0.78661 in. | – |
| Tappet Guide | I.D. | 20.000 to 20.021 mm<br>0.78740 to 0.78823 in. | – |
| Camshaft | Side Clearance | 0.07 to 0.22 mm<br>0.0028 to 0.0087 in. | 0.30 mm<br>0.0118 in. |
| Camshaft | Alignment | – | 0.01 mm<br>0.0004 in. |
| Cam Height | Intake | 28.80 mm<br>1.1339 in. | 28.75 mm<br>1.1319 in. |
| | Exhaust | 29.00 mm<br>1.1417 in. | 28.95 mm<br>1.1398 in. |
| Camshaft Journal to Cylinder Block Bore | Oil Clearance | 0.05 to 0.09 mm<br>0.0020 to 0.0036 in. | 0.15 mm<br>0.0059 in. |
| Camshaft Journal | O.D. | 35.934 to 35.950 mm<br>1.4147 to 1.4154 in. | – |
| Cylinder Block Bore | I.D. | 36.000 to 36.025 mm<br>1.4173 to 1.4183 in. | – |

W1016974

**ENGINE BODY (Continued)**

| Item | | Factory Specification | Allowable Limit |
|---|---|---|---|
| Timing Gear | | | |
| Crank Gear to Idle Gear | Backlash | 0.032 to 0.115 mm<br>0.0013 to 0.0045 in. | 0.15 mm<br>0.0059 in. |
| Idle Gear to Cam Gear | Backlash | 0.036 to 0.114 mm<br>0.0014 to 0.0045 in. | 0.15 mm<br>0.0059 in. |
| Idle Gear to Injection Pump Gear | Backlash | 0.034 to 0.116 mm<br>0.00134 to 0.00457 in. | 0.15 mm<br>0.0059 in. |
| Injection Pump Gear to Governor Gear | Backlash | 0.030 to 0.117 mm<br>0.00118 to 0.00461 in. | 0.15 mm<br>0.0059 in. |
| Idle Gear | Side Clearance | 0.20 to 0.51 mm<br>0.0079 to 0.0200 in. | 0.8 mm<br>0.0315 in. |
| Idle Gear Shaft to Gear Bushing | Clearance | 0.020 to 0.054 mm<br>0.0008 to 0.0021 in. | 0.10 mm<br>0.0039 in. |
| Idle Gear Shaft | O.D. | 25.967 to 25.980 mm<br>1.0223 to 1.0228 in. | – |
| Gear Bushing | I.D. | 26.000 to 26.021 mm<br>1.0236 to 1.0244 in. | – |
| Piston Pin Bore | I.D. | 22.000 to 22.013 mm<br>0.8661 to 0.8667 in. | 22.03 mm<br>0.8673 in. |
| Piston Ring Clearance | Second Ring | 0.085 to 0.112 mm<br>0.00335 to 0.00441 in | 0.20 mm<br>0.0079 in. |
| | Oil Ring | 0.020 to 0.055 mm<br>0.0008 to 0.0022 in. | 0.15 mm<br>0.0059 in. |
| Ring Gap | Top Ring and Second Ring | 0.30 to 0.45 mm<br>0.0118 to 0.0177 in. | 1.25 mm<br>0.0492 in. |
| | Oil Ring | 0.25 to 0.40 mm<br>0.0098 to 0.0157 in. | 1.25 mm<br>0.0492 in. |
| Connecting Rod | Alignment | – | 0.05 mm<br>0.0020 in. |
| Piston Pin to Small End Bushing | Clearance | 0.014 to 0.038 mm<br>0.00055 to 0.00150 in. | 0.15 mm<br>0.0059 in. |
| Piston Pin | O.D. | 22.002 to 22.011 mm<br>0.86622 to 0.86657 in. | – |
| Small End Bushing | I.D. | 22.025 to 22.040 mm<br>0.86713 to 0.86771 in. | – |
| Crankshaft | Alignment | – | 0.02 mm<br>0.0008 in. |

W1019055

**ENGINE BODY (Continued)**

| Item | | Factory Specification | Allowable Limit |
|---|---|---|---|
| Crankshaft Journal to Crankshaft Bearing 1 | Oil Clearance | 0.034 to 0.114 mm<br>0.00134 to 0.00449 in. | 0.20 mm<br>0.0079 in. |
| Crankshaft Journal | O.D. | 47.934 to 47.950 mm<br>1.88717 to 1.88779 in. | – |
| Crankshaft Bearing 1 | I.D. | 47.984 to 48.048 mm<br>1.88913 to 1.89165 in. | – |
| Crankshaft Journal to Crankshaft Bearing 2 | Oil Clearance | 0.034 to 0.095 mm<br>0.00134 to 0.00374 in. | 0.20 mm<br>0.0079 in. |
| Crankshaft Journal | O.D. | 47.934 to 47.950 mm<br>1.88716 to 1.88779 in. | – |
| Crankshaft Bearing 2 | I.D. | 47.984 to 48.029 mm<br>1.88913 to 1.89091 in. | – |
| Crankpin to Crankpin Bearing | Oil Clearance | 0.029 to 0.091 mm<br>0.00114 to 0.00358 in. | 0.20 mm<br>0.0079 in. |
| Crankpin | O.D. | 39.959 to 39.975 mm<br>1.57319 to 1.57382 in. | – |
| Crankpin Bearing | I.D. | 40.004 to 40.050 mm<br>1.57496 to 1.57677 in. | – |
| Crankshaft Journal to Crankshaft Bearing 3 | Oil Clearance | 0.034 to 0.098 mm<br>0.00134 to 0.00386 in. | 0.20 mm<br>0.0079 in. |
| Crankshaft Journal | O.D. | 51.921 to 51.940 mm<br>2.04413 to 2.04488 in. | – |
| Crankshaft Bearing 3 | I.D. | 51.974 to 52.019 mm<br>2.04622 to 2.04799 in. | – |
| Crankshaft | Side Clearance | 0.15 to 0.31 mm<br>0.0059 to 0.0122 in. | 0.50 mm<br>0.0197 in. |
| Cylinder<br>[Standard] | I.D. | 76.000 to 76.019 mm<br>2.9921 to 2.9929 in. | 76.169 mm<br>2.9988 in. |
| Cylinder<br>[Oversize: 0.5 mm (0.0197 in.)] | I.D. | 76.500 to 76.519 mm<br>3.0118 to 3.1255 in. | 76.319 mm<br>3.0185 in. |

W1022700

## [2] LUBRICATING SYSTEM

| Item | | Factory Specification | Allowable Limit |
|---|---|---|---|
| Engine Oil Pressure | At Idle Speed | More than 49 kPa<br>0.5 kgf/cm$^2$<br>7 psi | – |
| | At Rated Speed | 196 to 441 kPa<br>2.0 to 4.5 kgf/cm$^2$<br>36 to 64 psi | 147 kPa<br>1.5 kgf/cm$^2$<br>27 psi |
| Inner Rotor to Outer Rotor | Clearance | 0.06 to 0.18 mm<br>0.0024 to 0.0071 in. | – |
| Outer Rotor to Pump Body | Clearance | 0.100 to 0.180 mm<br>0.0039 to 0.0071 in. | – |
| Rotor to Cover | Clearance | 0.025 to 0.075 mm<br>0.0010 to 0.0029 in. | – |

W1017384

## [3] COOLING SYSTEM

| | | | |
|---|---|---|---|
| Thermostat | Valve Opening Temperature (At Beginning) | 80.5 to 83.5 °C<br>176.9 to 182.3 °F | – |
| | Valve Opening Temperature (Opened Completely) | 95 °C<br>203 °F | – |
| Radiator | Water Leakage Test Pressure | No leak at<br>137 kPa<br>1.4 kgf/cm$^2$<br>20 psi | – |
| Radiator Cap | Pressure Falling Time | 10 seconds or more for pressure falling from<br>88 to 59 kPa<br>from 0.9 to 0.6 kgf/cm$^2$<br>from 13 to 9 psi | – |
| Fan Belt | Tension | Approx. 10 mm (0.4 in.) deflection at 98 N<br>(10 kgf, 22 lbs) of force | – |

W1017547

# [4] FUEL SYSTEM

| Item | | Factory Specification | Allowable Limit |
|---|---|---|---|
| Injection Pump | Injection Timing | 0.30 to 0.33 rad<br>17.0 to 19.0°<br>before T.D.C. | – |
| Fuel Injection Nozzle | Injection Pressure | 13.73 to 14.71 MPa<br>140 to 150 kgf/cm$^2$<br>1991 to 2133 psi | – |
| Fuel Injection Nozzle Valve Seat | Valve Seat Tightness | When the pressure is 12.75 MPa (130 kgf/cm$^2$, 1849 psi), the valve seat must be fuel tightness. | – |

W1013874

# 3. TIGHTENING TORQUES

Tightening torques of screws, bolts and nuts on the table below are especially specified.
(For general use screws, bolts and nuts : See page G-9.)

| Item | Size × Pitch | N·m | kgf·m | ft-lbs |
|---|---|---|---|---|
| Starter **M** terminal nut | M6 × 1.0 | 9.8 to 13.7 | 1.0 to 1.4 | 7.2 to 10.1 |
| Universal joint mounting screw | M8 × 1.25 | 26.0 to 28.0 | 2.7 to 2.9 | 19.2 to 20.7 |
| Engine support mounting screw | M10 × 1.25 | 48.1 to 55.9 | 4.9 to 5.7 | 35.4 to 41.2 |
| Engine mounting nut | M8 × 1.25 | 23.5 to 27.5 | 2.4 to 2.8 | 17.4 to 20.3 |
| Cushion mounting nut | M8 × 1.25 | 17.6 to 20.6 | 1.8 to 2.1 | 13.0 to 15.2 |

W1026185

| Item | Size × Pitch | N·m | kgf·m | ft-lbs |
|---|---|---|---|---|
| Air cleaner stay nut | M10 × 1.25 | 48.1 to 55.9 | 4.9 to 5.7 | 35.4 to 41.2 |
| * Bearing case cover screw | M6 × 1.0 | 9.8 to 11.3 | 1.00 to 1.15 | 7.2 to 8.3 |
| Connecting rod screw | M8 × 1.0 | 41.2 to 46.1 | 4.2 to 4.7 | 30.3 to 33.9 |
| * Cylinder head cover cap nut | M7 × 1.0 | 6.9 to 8.8 | 0.7 to 0.9 | 5.1 to 6.5 |
| * Cylinder head screw | M10 × 1.25 | 63.7 to 68.6 | 6.5 to 7.0 | 47.0 to 50.6 |
| * Fan drive pulley screw | M14 × 1.5 | 235.4 to 245.2 | 24.0 to 25.0 | 173.6 to 180.8 |
| * Flywheel | M10 × 1.25 | 53.9 to 58.8 | 5.5 to 6.0 | 39.8 to 43.4 |
| Glow plug | M8 × 1.0 | 7.8 to 14.7 | 0.8 to 1.5 | 5.8 to 10.8 |
| * Idle gear shaft mounting screw | M6 × 1.0 | 9.8 to 11.3 | 1.00 to 1.15 | 7.2 to 8.3 |
| Injection pipe retaining nut | M12 × 1.5 | 24.5 to 34.3 | 2.5 to 3.5 | 18.1 to 25.3 |
| * Main bearing case screw 1 | M8 × 1.25 | 29.4 to 34.3 | 3.0 to 3.5 | 21.7 to 25.3 |
| * Main bearing case screw 2 | M9 × 1.25 | 49.0 to 53.9 | 5.0 to 5.5 | 36.2 to 39.8 |
| Nozzle holder | | 34.3 to 39.2 | 3.5 to 4.0 | 25.3 to 28.9 |
| Nozzle holder assembly | M20 × 1.5 | 49.0 to 68.6 | 5.0 to 7.0 | 36.2 to 50.6 |
| * Oil pressure switch | PT 1/8 | 14.7 to 19.6 | 1.5 to 2.0 | 10.8 to 14.5 |
| Overflow pipe assembly retaining nut | M12 × 1.5 | 19.6 to 24.5 | 2.0 to 2.5 | 14.5 to 18.1 |
| * Rocker arm bracket nut | M7 × 1.0 | 21.6 to 26.5 | 2.2 to 2.7 | 15.9 to 19.5 |

■ **NOTE**

- **In removing and applying the bolts and nuts marked with " * ", a pneumatic wrench or similar pneumatic tool, if employed, must be used with enough care not to get them sized.**
- **For * marked screws, bolts and nuts on the table, apply engine oil to their threads and seats before tightening.**
- **The letter "M" in Size × Pitch means that the screw, bolt or nut dimension stands for metric. The size is the nominal outside diameter in mm of the threads. The pitch is the nominal distance in mm between two threads.**

W1026768

# 4. CHECKING, DISASSEMBLING AND SERVICING

## [1] SEPARATING ENGINE

### (1) Disassembling and Assembling

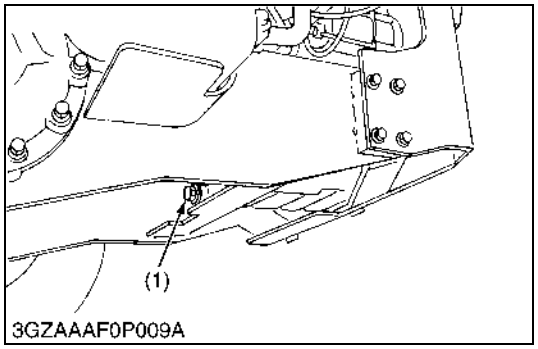


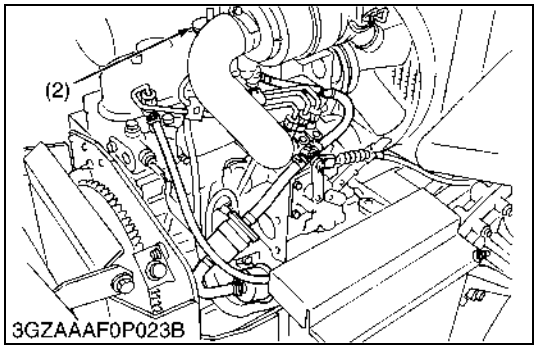


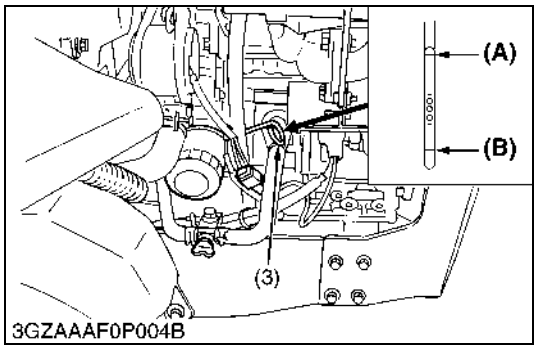


**Draining Engine Oil**

1. Park the machine on level ground.
2. Start and warm up the engine for approx. 5 minutes.
3. Place an oil pan underneath the engine.
4. Remove the drain plug (1) to drain oil.
5. After draining, screw in the drain plug (1).

**(When refilling)**

- Fill the engine oil up to the upper line on the dipstick (3).

| | | |
|---|---|---|
| Engine oil | Capacity | 3.4 L<br>3.6 U.S.qts.<br>3.0 Imp.qts. |

■ **IMPORTANT**

- **Never mix two different type of oil.**
- **Use the proper SAE Engine Oil according to ambient temperatures.**
  **Refer to "LUBRICANTS, FUEL AND COOLANT". (See page G-7.)**

(1) Drain Plug
(2) Oil Inlet Plug
(3) Dipstick

**(A) Upper Level**
**(B) Lower Level**

W1019220

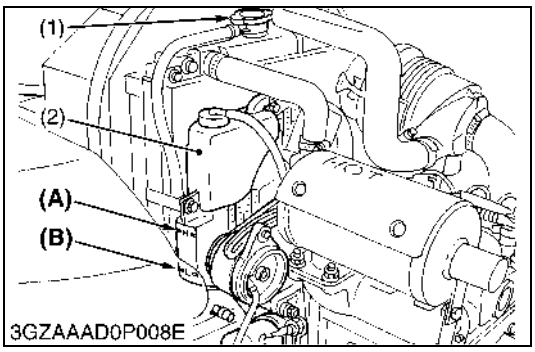


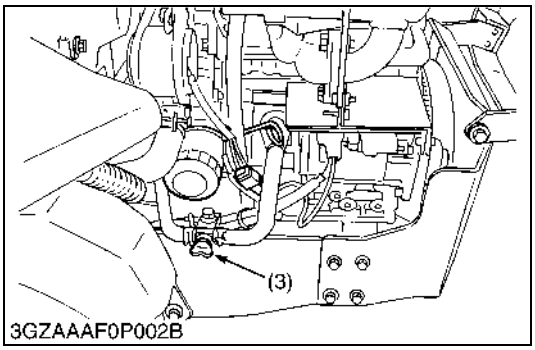


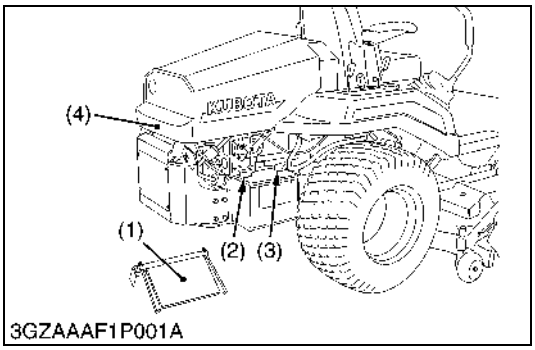


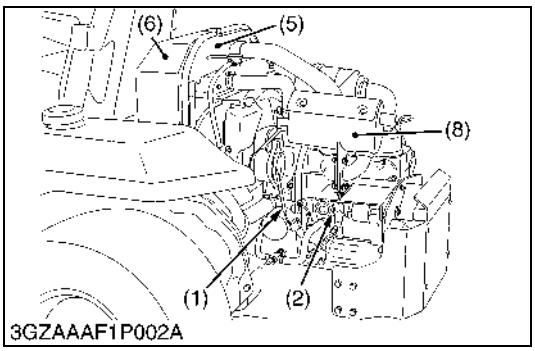


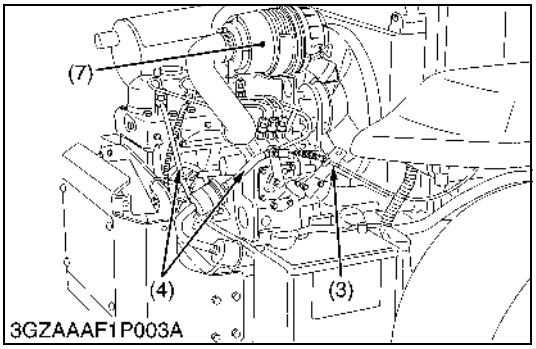


## Draining Coolant

**CAUTION**

- **Never open the radiator cap while operating or immediately after stopping. Otherwise, hot water will spout out from the radiator. Wait for more than ten minutes to cool the radiator, before opening the cap.**

1. Stop the engine and let cool down.
2. Remove the radiator coolant drain cock (3) to drain the coolant.
3. Remove the radiator cap (1) to completely drain the coolant.
4. After all coolant is drained, close the drain cock (3).

| | | | |
|---|---|---|---|
| Coolant | Capacity | Radiator | 4.0 L<br>4.2 U.S.qts.<br>3.5 Imp.qts |
| | | Recovery tank | 0.25 L<br>0.26 U.S.qts.<br>0.22 Imp.qts |

(1) Radiator Cap
(2) Recovery Tank
(3) Engine Coolant Drain Cock

W1019510

## Battery and Bonnet

**CAUTION**

- **When disconnecting the battery cables, disconnect the negative cable from the battery first. When connecting, connect the positive cable to the battery first.**

1. Remove the battery cover (1).
2. Disconnect the negative cable (3) from the battery.
3. Disconnect the positive cable (2) from the battery.
4. Remove the snap pin and bonnet mounting screw, then remove the bonnet (4).

(1) Battery Cover
(2) Positive Cable
(3) Negative Cable
(4) Bonnet

W1043431

## Panel Screen, Shutter Plate and Others

1. Disconnect the glow plug and stop solenoid harness (1) and positive cable (2) battery side first.
2. Disconnect the accelerator wire (3) and fuse box from shutter plate (5).
3. Disconnect the fuel hoses (4).
4. Remove the air cleaner (7) and muffler (8).
5. Remove the panel screen (6).

■ **IMPORTANT**

- **When disconnecting the fuel hoses, be careful not to let the fuel spill out the hoses.**

(1) Wire Harness
(2) Positive Cable
(3) Accelerator Wire
(4) Fuel Hose
(5) Shutter Plate
(6) Panel Screen
(7) Air Cleaner
(8) Muffler

W1043705

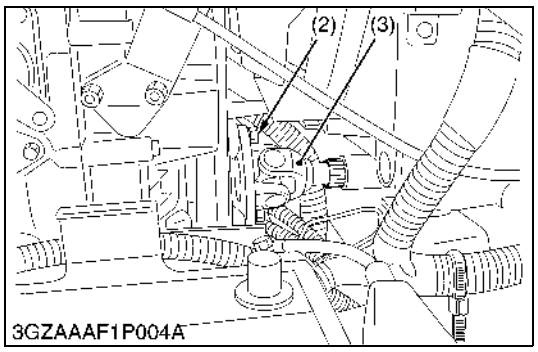


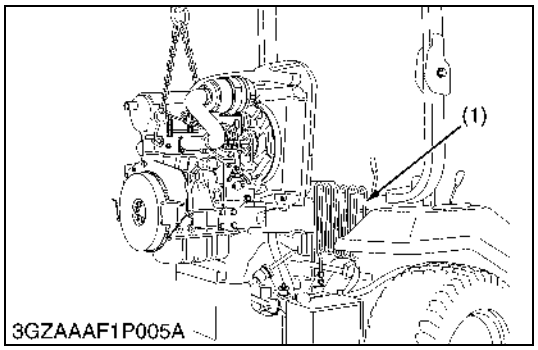


## Engine Disassembly

1. Remove the universal joint mounting screws (2).
2. Disconnect the universal joint (3) from fun drive pulley.
3. Remove the engine mounting nuts.
4. Separate the engine with the radiator from the frame, take care not to damage the radiator.

**(When reassembling)**

- Apply grease to the all splines on the drive shaft.

| | | |
|---|---|---|
| Tightening torque | Universal joint mounting screw | 26.0 to 28.0 N·m<br>2.7 to 2.9 kgf·m<br>19.2 to 20.7 ft-lbs |
| | Engine mounting nut | 23.5 to 27.5 N·m<br>2.4 to 2.8 kgf·m<br>17.4 to 20.3 ft-lbs |

(1) Oil Cooler
(2) Universal Joint Mounting Screw
(3) Universal Joint

W1045010

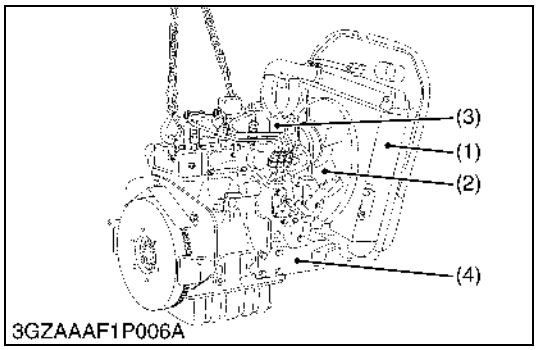


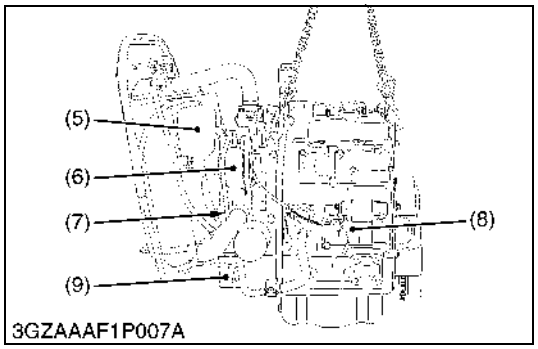


## Dynamo, Fan Belt and Muffler

1. Disconnect the radiator hoses and separate the radiator (1) with recovery tank (5) from engine assembly.
2. Remove the cooling fan (2) and fan pulley.
3. Remove the dynamo (6) and fan belt (7).
4. Remove the starter (8).
5. Remove the air cleaner stay (3).
6. Remove the wire bracket.
7. Remove the engine support LH (9) and RH (4).

**(When reassembling)**

- Check to see that there are no cracks on the belt surface.

■ **IMPORTANT**

- **After reassembling the fan belt, be sure to adjust the fan belt tension.**

| | | |
|---|---|---|
| Tightening torque | Engine support mounting screw | 48.1 to 55.9 N·m<br>4.9 to 5.7 kgf·m<br>35.4 to 41.2 ft-lbs |

(1) Radiator
(2) Cooling Fan
(3) Air Cleaner Stay
(4) Engine Support RH
(5) Recovery Tank
(6) Dynamo
(7) Fan Belt
(8) Starter
(9) Engine Support LH

W1045360

# [2] ENGINE BODY

## (1) Checking and Adjusting

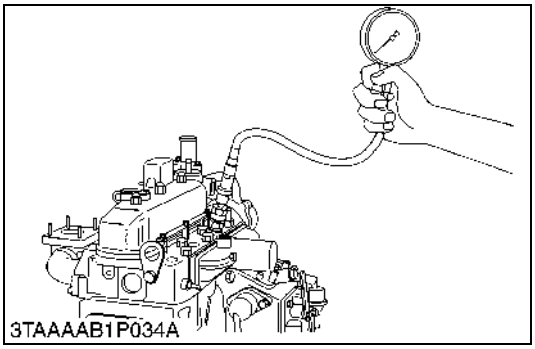


**Compression Pressure**

1. Run the engine until it is warmed up.
2. Stop the engine.
3. Disconnect the **2P** connector from the fuel pump.
4. Remove the air cleaner, the muffler and all injection nozzles.
5. Disconnect the accelerator wire.
6. Engage the parking brake.
7. Set a compression tester (Code No. 07909-30208) with the adaptor (Adaptor H, Code No. 07909-31231) to the nozzle hole.
8. While cranking the engine with the starter, measure the compression pressure.
9. Repeat steps 7 and 8 for each cylinder.
10. If the measurement is below the allowable limit, apply a small amount of oil to the cylinder wall through the nozzle hole and measure the compression pressure again.
11. If the compression pressure is still less than the allowable limit, check the top clearance, valve clearance and cylinder head.
12. If the compression pressure increases after applying oil, check the cylinder wall and piston rings.

■ **NOTE**

- **Check the compression pressure with the specified valve clearance.**
- **Always use a fully charged battery for performing this test.**
- **Variances in cylinder compression values should be under 10 %.**

| | | |
|---|---|---|
| Compression pressure | Factory spec. | 2.84 to 3.24 MPa<br>29.0 to 33.0 kgf/cm$^2$<br>412 to 469 psi |
| | Allowable limit | 2.26 MPa<br>23.0 kgf/cm$^2$<br>327 psi |

W1022478

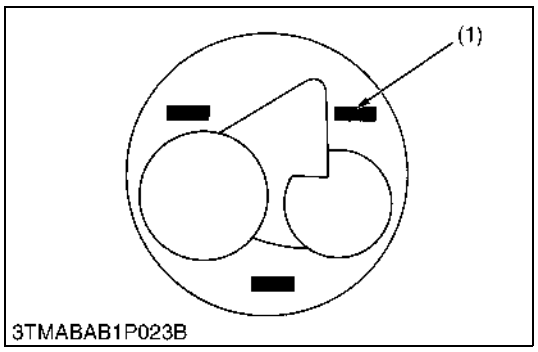


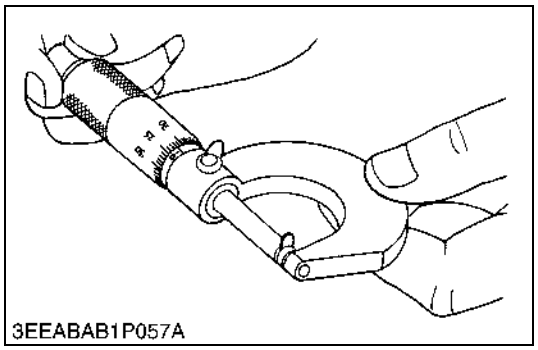


**Top Clearance**

1. Remove the cylinder head. (Do not attempt to remove the cylinder head gasket.)
2. Move the piston up, and stick a strip of fuse [1.5 mm dia. (0.059 in. dia.), 5 to 7 mm long (0.197 to 0.276 in. long)] on the piston head at three positions with grease so as to avoid the intake and exhaust valves and the combustion chamber ports.
3. Lower the piston, and install the cylinder head and tighten the cylinder head screws to the specified torque.
4. Turn the crankshaft until the piston exceeds its top dead center.
5. Remove the cylinder head, and measure the thickness of the squeezed fuses.
6. If the measurement is not within the factory specifications, check the oil clearance between the crankpin and crankpin bearing and between the piston pin and small end bushing.

■ **NOTE**

- **After checking the top clearance, be sure to assemble the cylinder head with a new cylinder head gasket.**

| | | |
|---|---|---|
| Top clearance | Factory spec. | 0.55 to 0.70 mm<br>0.0217 to 0.276 in. |

| | | |
|---|---|---|
| Tightening torque | Cylinder head screw | 63.7 to 68.6 N·m<br>6.5 to 7.0 kgf·m<br>47.0 to 50.6 ft-lbs |

(1) Fuse

W10107670

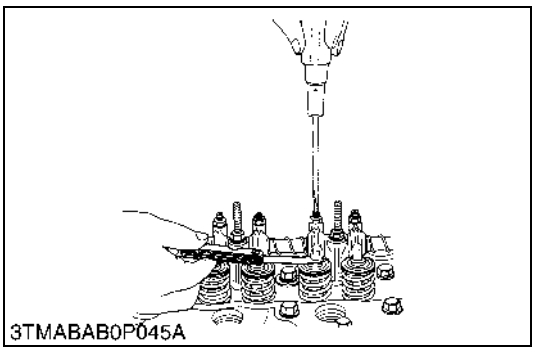


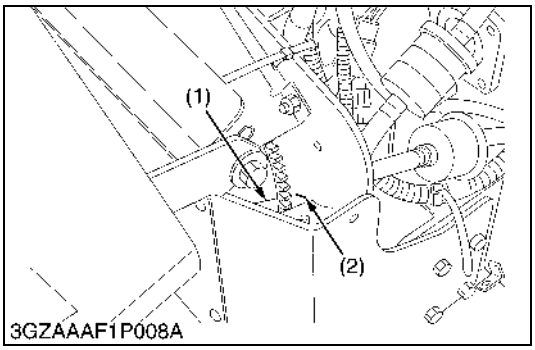


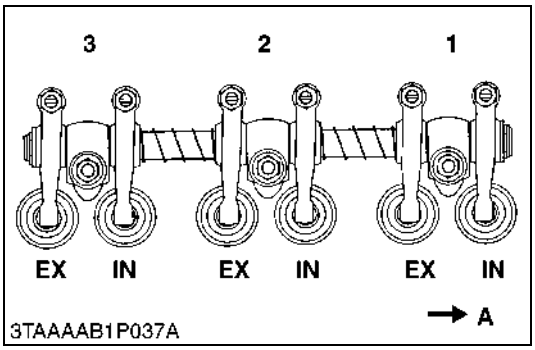


## Valve Clearance

■ **IMPORTANT**

- **The valve clearance must be checked and adjusted when engine is cold.**

1. Remove the cylinder head cover and the glow plugs.
2. Align the “1TC” mark (1) on the flywheel and alignment mark (2) on the rear end plate so that the No. 1 piston comes to the compression top dead center.
3. Check the following valve clearance marked with “★” using a feeler gauge.

**[When No. 1 piston comes to the compression top dead center]**

| Cylinder No. | No. 1 | No. 2 | No. 3 |
|---|---|---|---|
| Intake valve | ★ | | ★ |
| Exhaust valve | ★ | ★ | |

4. If the clearance is not within the factory specifications, adjust with the adjusting screw.
5. Then turn the flywheel 6.28 rad (360°), and align the “1TC” mark (1) on the flywheel and alignment mark (2) on the rear end plate so that the No. 1 piston comes to the overlap position.
6. Check the following valve clearance marked with “☆” using a feeler gauge.

**[When No. 1 piston comes to the overlap position]**

| Cylinder No. | No. 1 | No. 2 | No. 3 |
|---|---|---|---|
| Intake valve | | ☆ | |
| Exhaust valve | | | ☆ |

7. If the clearance is not within the factory specifications, adjust with the adjusting screw.

| | | |
|---|---|---|
| Intake and exhaust valve clearance (Cold) | Factory spec. | 0.145 to 0.185 mm<br>0.00571 to 0.00728 in. |

■ **NOTE**

- **The sequence of cylinder numbers is given as No. 1, No. 2 and No. 3 starting from the gear case side.**
- **After adjusting the valve clearance, secure the adjusting screw with the lock nut.**

(1) “1TC” Mark
(2) Alignment Mark

**A : Gear Case Side**

W10113200

## (2) Disassembling and Assembling

## (A) Cylinder Head and Valves

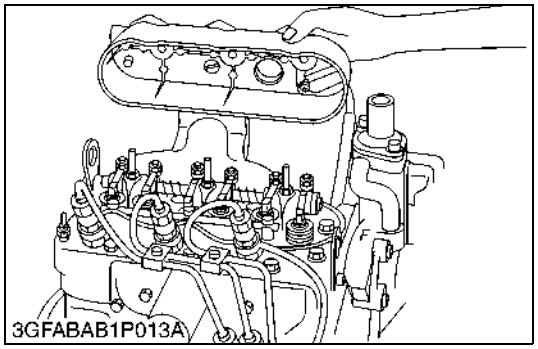


### Cylinder Head Cover

1. Remove the head cover cap nuts.
2. Remove the cylinder head cover.

**(When reassembling)**

- Check to see if the cylinder head cover gasket is not defective.
- Apply engine oil to the cylinder head cover cap nuts.
  And tighten them.

| | | |
|---|---|---|
| Tightening torque | Cylinder head cover cap nut | 6.9 to 8.8 N·m<br>0.7 to 0.9 kgf·m<br>5.1 to 6.5 ft-lbs |

W10147380

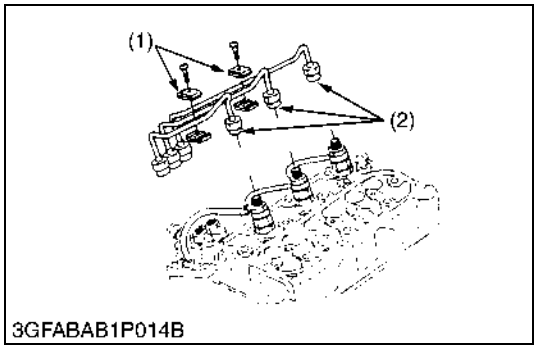


### Injection Pipes

1. Loosen the screws on the pipe clamps (1).
2. Detach the injection pipes (2).

**(When reassembling)**

- Blow out dust from the pipes with compressed air.
  Then reassemble the pipes in the reverse order.

| | | |
|---|---|---|
| Tightening torque | Injection pipe retaining nut | 24.5 to 34.3 N·m<br>2.5 to 3.5 kgf·m<br>18.1 to 25.3 ft-lbs |

(1) Pipe Clamp
(2) Injection Pipe

W10150780

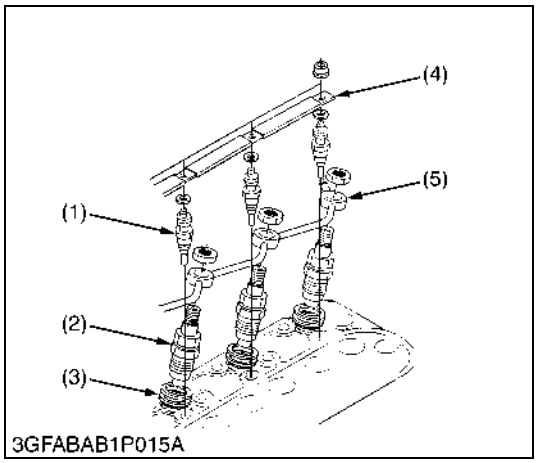


### Nozzle Holder Assembly and Glow Plug

1. Remove the overflow pipe assembly (5).
2. Remove the nozzle holder assemblies (2) using a 21 mm deep socket wrench.
3. Remove the copper gasket and heat seal (3).
4. Remove the lead (4) from the glow plugs.
5. Remove the glow plugs (1).

**(When reassembling)**

- Replace the copper gasket and heat seal with new one.

| | | |
|---|---|---|
| Tightening torque | Nozzle holder assembly | 49.0 to 68.6 N·m<br>5.0 to 7.0 kgf·m<br>36.2 to 50.6 ft-lbs |
| | Overflow pipe assembly retaining nut | 19.6 to 24.5 N·m<br>2.0 to 2.5 kgf·m<br>14.5 to 18.1 ft-lbs |
| | Glow plug | 7.8 to 14.7 N·m<br>0.8 to 1.5 kgf·m<br>5.8 to 10.8 ft-lbs |

(1) Glow Plug
(2) Nozzle Holder Assembly
(3) Heat Seal
(4) Lead
(5) Overflow Pipe Assembly

W10259700

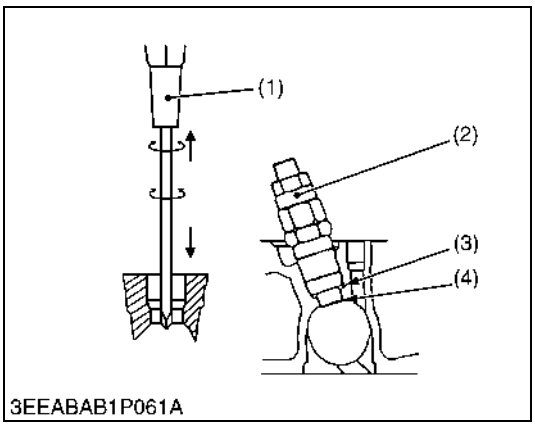


## Removal Procedure for Nozzle Heat Seal Service

■ **IMPORTANT**
- **Use a plus (phillips head) screw driver (1) that has a Dia. bigger than the heat seal hole (Approx. 6 mm) 1/4 in..**

1. Drive a screw driver (1) lightly into the heat seal hole.
2. Turn a screw driver three or four times each way.
3. While turning the screw driver, slowly pull the heat seal (4) out together with the copper gasket (3).
4. If the heat seal drops, repeat the above procedure.

(1) Screw driver (Plus)
(2) Nozzle Holder
(3) Copper Gasket
(4) Heat Seal

W10154410

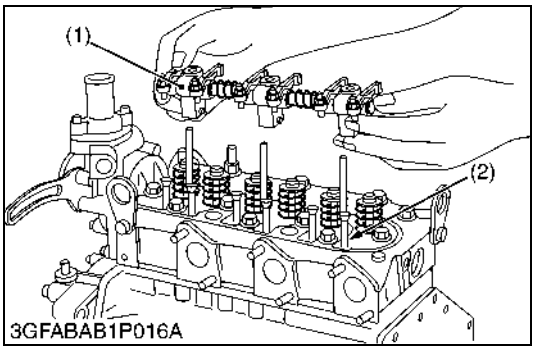


## Rocker Arm and Push Rod

1. Remove the rocker arm bracket nuts.
2. Detach the rocker arm assembly (1).
3. Remove the push rods (2).

**(When reassembling)**
- When putting the push rods (2) onto the tappets (3), check to see if their ends are properly engaged with the grooves.

■ **IMPORTANT**
- **After installing the rocker arm, be sure to adjust the valve clearance.**
- **Apply engine oil to the rocker arm bracket nuts. And tighten them.**

| | | |
|---|---|---|
| Tightening torque | Rocker arm bracket nut | 21.6 to 26.5 N·m<br>2.2 to 2.7 kgf·m<br>15.9 to 19.5 ft-lbs |

(1) Rocker Arm Assembly
(2) Push Rod
(3) Tappet

W10155810

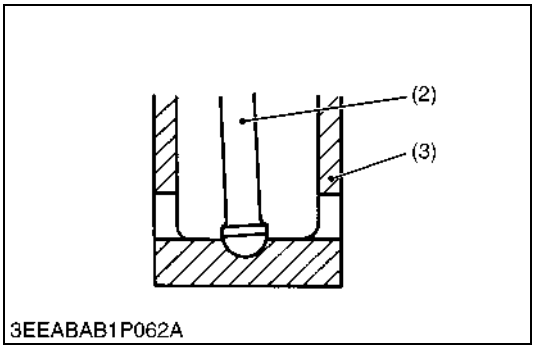


## Cylinder Head

1. Loosen the pipe clamp, and remove the water return pipe.
2. Remove the cylinder head bolt in the order of (14) to (1).
3. Lift up the cylinder head to detach.
4. Remove the cylinder head gasket and O-ring.

**(When reassembling)**
- Replace the cylinder head gasket with a new one.
- Tighten the cylinder head screws after applying sufficient oil.
- Tighten the cylinder head screws in diagonal sequence starting from the center. (Refer to figure left.)
- Tighten them uniformly, or the cylinder head may deform in the long run.

■ **NOTE**
- **To Loosen : 14 to 1**
- **To Tighten : 1 to 14**

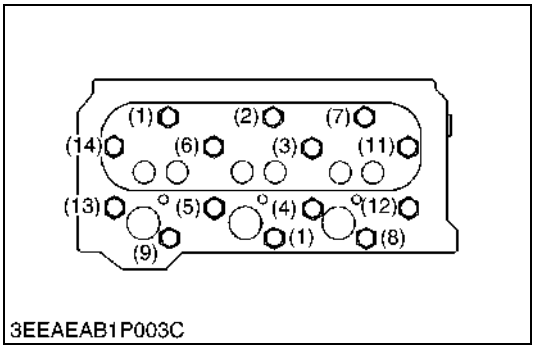


| | | |
|---|---|---|
| Tightening torque | Cylinder head screw | 63.7 to 68.6 N·m<br>6.5 to 7.0 kgf·m<br>47.0 to 50.6 ft-lbs |

W10159710

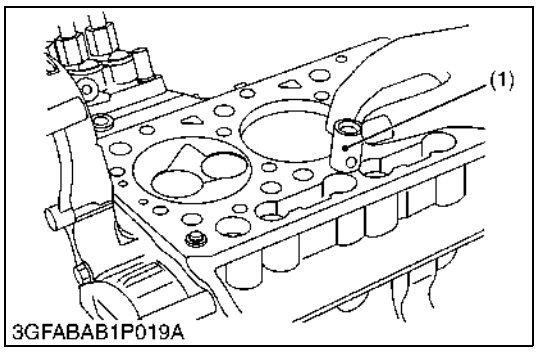


**Tappets**

1. Remove the tappets (1) from the crankcase.

**(When reassembling)**

- Before installing the tappets, apply engine oil thinly around them.

■ **IMPORTANT**

- **Mark the cylinder number to the tappets to prevent interchanging.**

(1) Tappet

W1027457

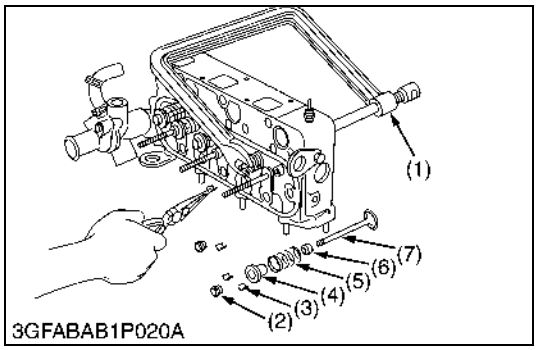


**Valves**

1. Remove the valve caps (2).
2. Remove the valve spring collet (3), pushing the valve spring retainer (4) by valve spring replacer (1).
3. Remove the valve spring retainer (4), valve spring (5) and valve stem seal (6).
4. Remove the valve (7).

**(When reassembling)**

- Wash the valve stem and valve guide hole, and apply engine oil sufficiently.
- After installing the valve spring collets, lightly tap the stem to assure proper fit with a plastic hammer.

■ **IMPORTANT**

- **Don't change the combination of valve and valve guide.**

(1) Valve Spring Replacer
(2) Valve Cap
(3) Valve Spring Collet
(4) Valve Spring Retainer
(5) Valve Spring
(6) Valve Stem Seal
(7) Valve

W10162820

## (B) Timing Gears, Fuel Camshaft and Camshaft

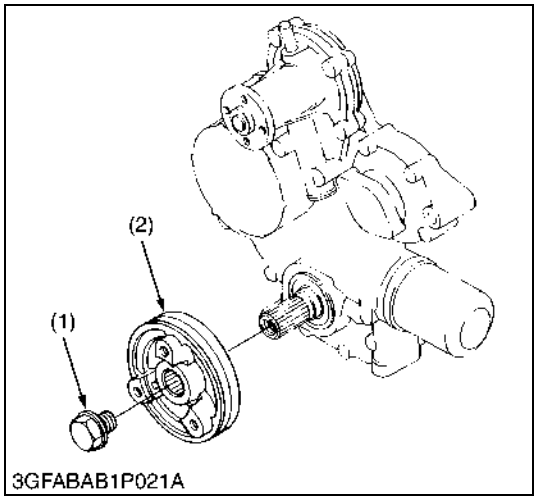


**Fan Drive Pulley**

1. Set the stopper to the flywheel.
2. Remove the fan drive pulley screw (1).
3. Draw out the fan drive pulley (2) with a puller.

**(When reassembling)**

- Install the fan drive pulley to the crankshaft, aligning the marks (3) on them.

| | | |
|---|---|---|
| Tightening torque | Fan drive pulley retaining screw | 235.4 to 245.2 N·m<br>24.0 to 25.0 kgf·m<br>173.6 to 180.8 ft-lbs |

(1) Fan Drive Pulley Screw
(2) Fan Drive Pulley
(3) Aligning Mark

W1035250

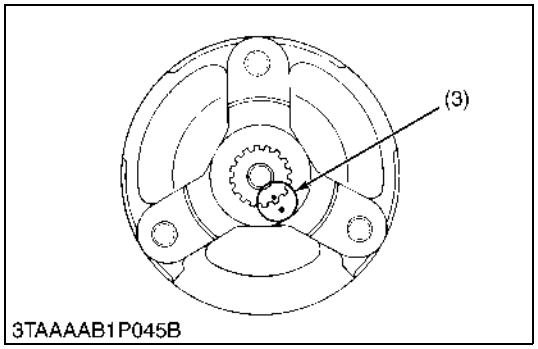

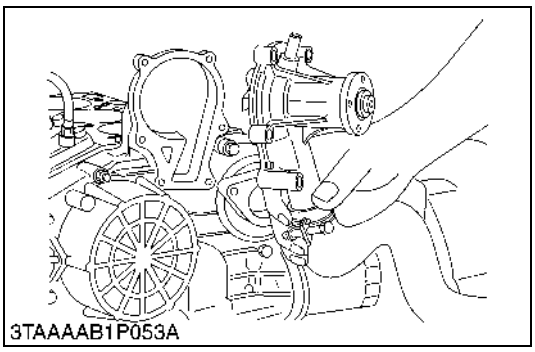


## Water Pump

1. Remove the water pump flange.

**(When reassembling)**

- Before installing the water pump flange gasket, apply liquid gasket (Three Bond 1215 or equivalent) to the both side.

W1035410

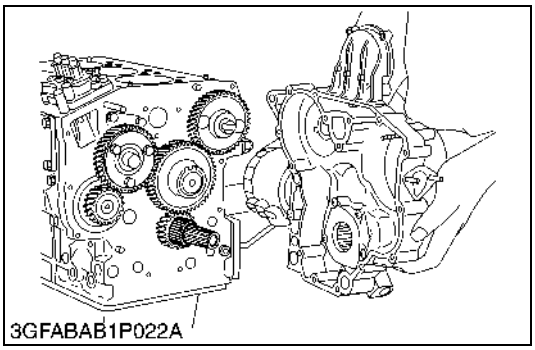


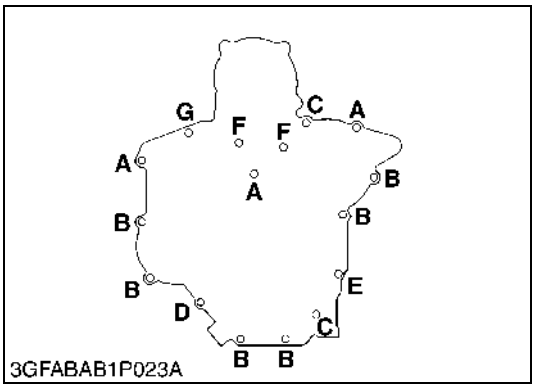


## Gear Case

1. Remove the gear case.
2. Remove the crankshaft collar and O-rings.

**(When reassembling)**

- Replace the gear case gasket with a new one.
- Be sure to set four O-rings inside the gear case and the O-ring on the crankshaft.
- Apply a thin film of engine oil to the oil seal, and install it, noting the lip come off.
- Length of the gear case mounting screws. (Refer to the figure.)
  A : 45 mm (1.77 in.)
  B : 50 mm (1.97 in.)
  C : 55 mm (2.17 in.)
  D : 59 mm (2.32 in.)
  E : 68 mm (2.68 in.)
  F : 80 mm (3.15 in.)
  G : Nut

W1035535

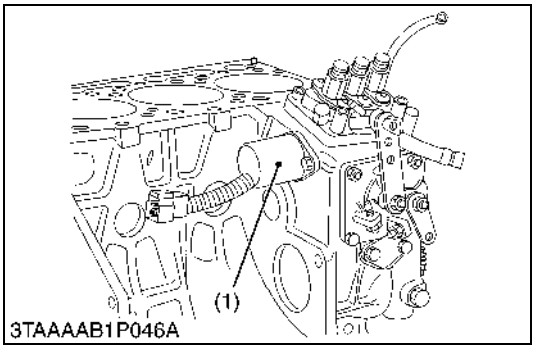


## Engine Stop Solenoid

1. Remove the engine stop solenoid (1).

**(When reassembling)**

- Apply a thin coat of liquid-type gasket (Three Bond 1215 or equivalent) to both surfaces of the solenoid's cover packing.
- Confirm the convex part of the flange of the engine stop solenoid has fitted into the hole, and then fasten the bolts.

(1) Engine Stop Solenoid

W1035740

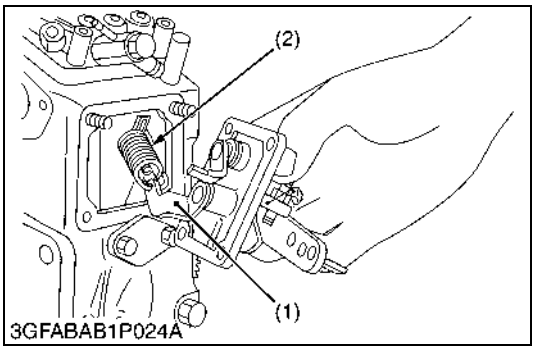


## Speed Control Plate

1. Remove the speed control plate and governor lever (1) from the governor springs 1 (2).

**(When reassembling)**

- Securely catch the governor spring on the governor lever as shown in the figure.
- Apply a liquid gasket (Three Bond 1215 or equivalent) to both sides of the speed control plate gasket.

(1) Governor Lever (2) Governor Spring 1

W1035848

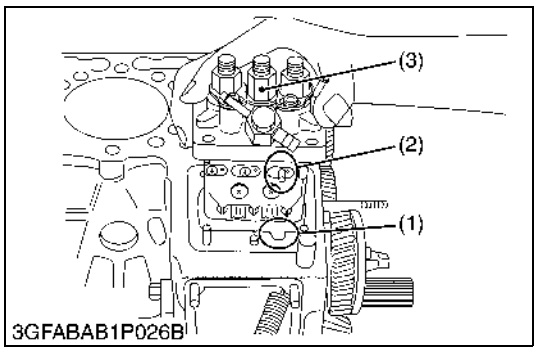



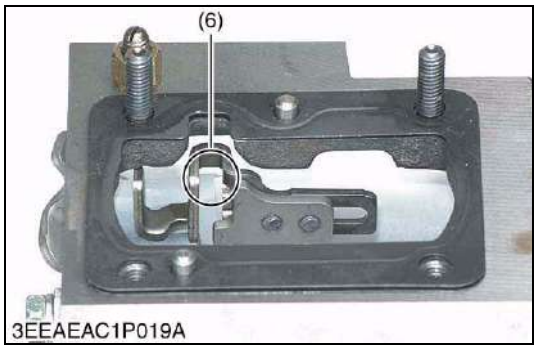


## Injection Pump

1. Disconnect the starter spring (4) on the thrust lever side (5).
2. Align the control rack pin (2) with the notch (1) on the crankcase, and remove the injection pump (3).
3. Remove the injection pump shims.
4. In principle, the injection pump should not be disassembled.

**(When reassembling)**

- When installing the injection pump, insert the control rack pin (2) firmly into the groove (6) of the thrust lever of fork lever.

■ **NOTE**

- **The sealant is applied to both sides of the soft metal gasket shim. The liquid gasket is not required for assembling.**
- **Addition or reduction of shim (0.05 mm, 0.0020 in.) delays or advances the injection timing by approx. 0.0087 rad (0.5 °).**
- **In disassembling and replacing, be sure to use the same number or new gasket shims with the same thickness.**

(1) Notch
(2) Control Rack Pin
(3) Injection Pump
(4) Start Spring
(5) Thrust Lever
(6) Groove

W1062712

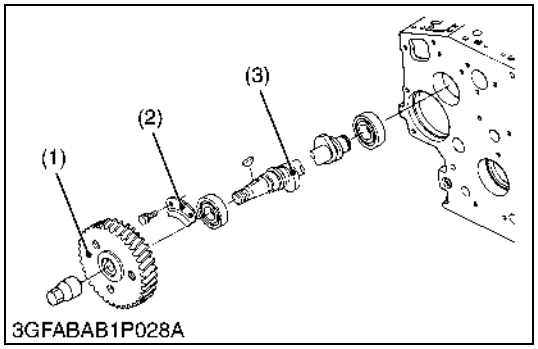


## Fuel Camshaft

1. Remove the fuel camshaft stopper (2).
2. Draw out the fuel camshaft (3) and injection pump gear (1).

**(When reassembling)**

- Apply engine oil thinly to the fuel camshaft before installation.

(1) Injection Pump Gear
(2) Fuel Camshaft Stopper
(3) Fuel Camshaft

W1036263

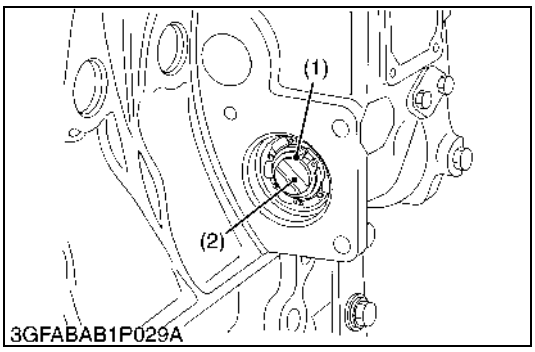


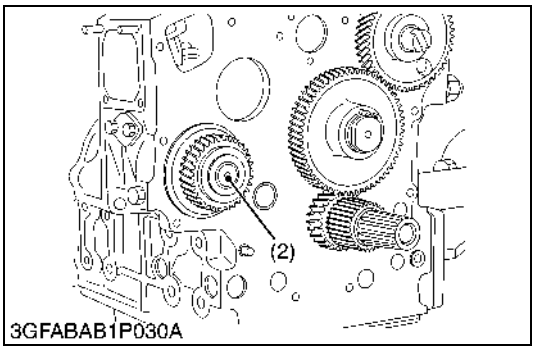


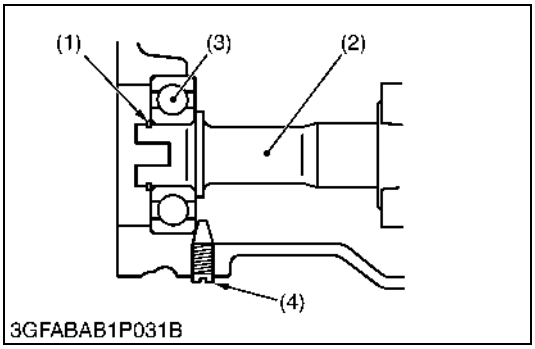


## Governor Shaft

1. Remove the pump cover.
2. Remove the external snap ring (1) from the governor shaft (2).
3. Pull out the governor shaft (2).

**(When reassembling)**

- Make sure assembling the external snap ring of the governor shaft.
- Check the governor shaft for smooth rotation.

■ **IMPORTANT**

- **When replacing the ball bearing of governor shaft, securely fit the ball bearing (3) to the crankcase, apply an adhesive (Three Bond 1324B or equivalent) to the set screw (4), and fasten the screw until its tapered part contacts the circumferential end of the ball bearing.**

(1) External Snap Ring
(2) Governor Shaft
(3) Ball Bearing
(4) Set Screw

W1036385

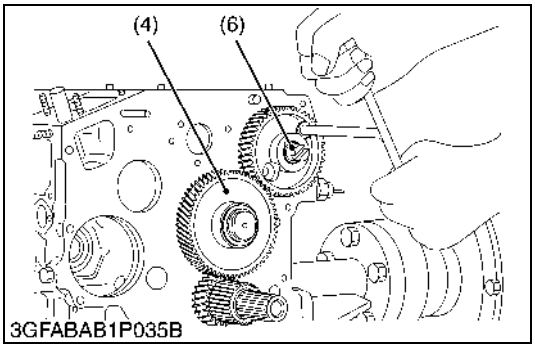


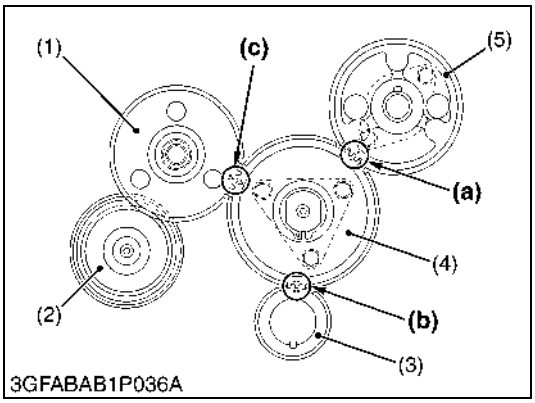


## Camshaft and Idle Gear

1. Remove the external snap ring, and then remove the idle gear (4).
2. Remove the camshaft stopper mounting screw, and pull out the camshaft (6).

**(When reassembling)**

- When installing the idle gear, be sure to align the alignment marks **(a)**, **(b)**, **(c)** on the gears.
- Securely fit the external snap ring and stopper.

(1) Injection Pump Gear
(2) Governor Gear
(3) Crank Gear
(4) Idle Gear
(5) Cam Gear
(6) Camshaft

**(a) Alignment Mark (Idle Gear and Cam Gear)**
**(b) Alignment Mark (Idle Gear and Crank Gear)**
**(c) Alignment Mark (Idle Gear and Injection Pump Gear)**

W1036981

## (C) Connecting Rod and Piston

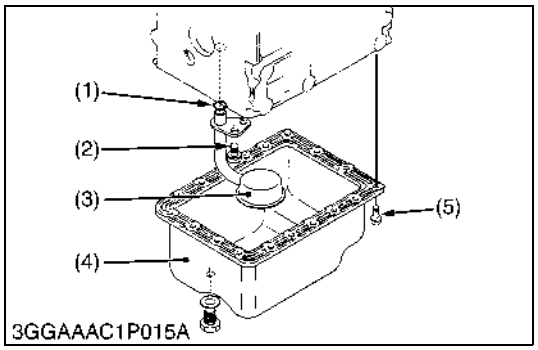


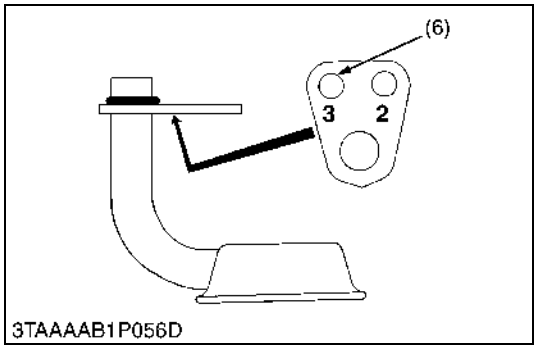


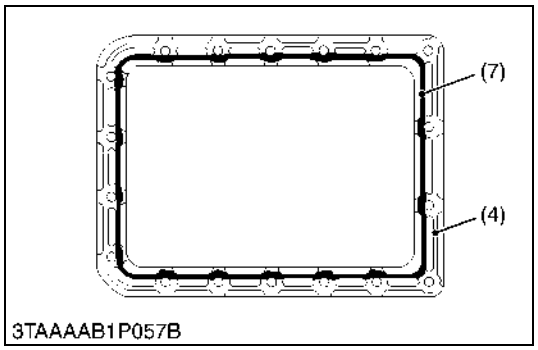


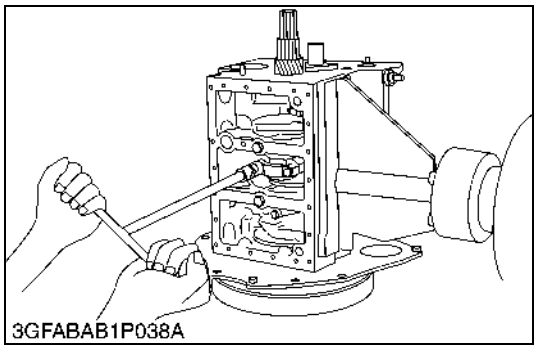


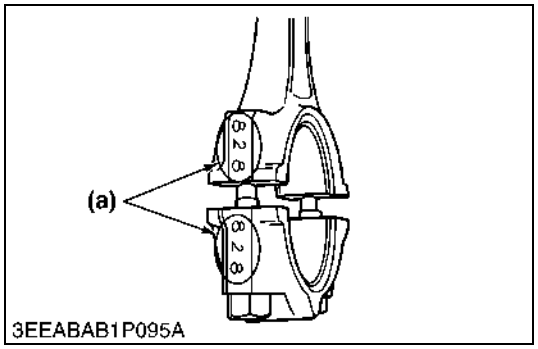


**Oil Pan and Oil Strainer**

1. Remove the oil pan (4).
2. Remove the oil strainer (3).

**(When reassembling)**

- Install the oil strainer, using care not to damage the O-ring (1).
- Using the hole (6) numbered “3”, install the oil strainer by mounting screw.
- Apply liquid gasket (Three Bond 1270D or 1270C) to the oil pan as shown in the figure.

■ **IMPORTANT**

- **Scrape off the old adhesive completely. Wipe the sealing surface clean using waste cloth soaked with gasoline. Now apply new adhesive 3 to 5 mm (0.12 to 0.20 in.) thick all over the contact surface. Apply the adhesive also on the center of the flange as well as on the inner wall of each bolt hole.**
- **Cut the nozzle of the “fluid sealant” container at its second notch. Apply “fluid sealant” about 5 mm (0.20 in.) thick. Within 20 minutes after the application of fluid sealant, reassemble the components. Wait then for about 30 minutes, and pour oil in the crankcase.**

(1) O-ring
(2) Screw
(3) Oil Strainer
(4) Oil Pan
(5) Oil Pan Mounting Screws
(6) Hole
(7) Fluid sealant

W10265670

**Connecting Rod Cap**

1. Remove the connecting rod screws from connecting rod cap.
2. Remove the connecting rod caps.

**(When reassembling)**

- Align the marks **(a)** with each other. (Face the marks toward the injection pump.)
- Apply engine oil to the connecting rod screws and lightly screw it in by hand, then tighten it to the specified torque.
  If the connecting rod screw won’t be screwed in smoothly, clean the threads.
  If the connecting rod screw is still hard to screw in, replace it.
- Do not change the combination of crankpin bearing and connecting rod.

| | | |
|---|---|---|
| Tightening torque | Connecting rod screw | 41.2 to 46.1 N·m<br>4.2 to 4.7 kgf·m<br>30.3 to 33.9 ft-lbs |

**(a) Mark**

W10275480

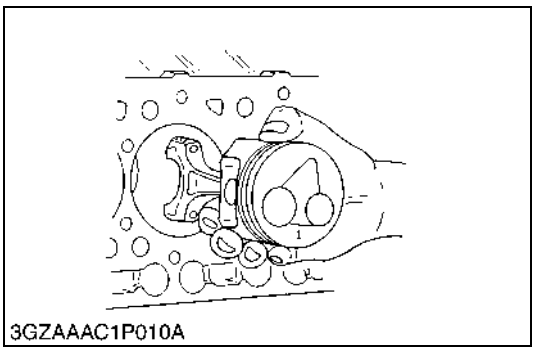
3GZAAAC1P010A

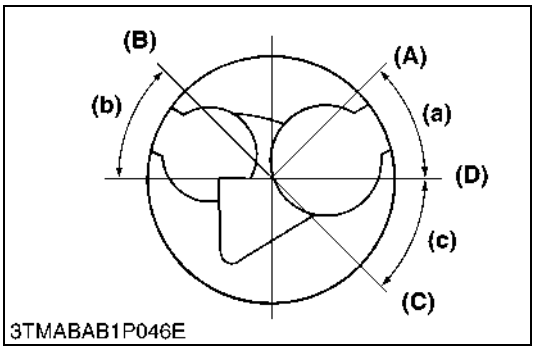

3TMABAB1P046E

**Piston**

1. Turn the flywheel and bring the No. 1 piston to the top dead center.
2. Pull out the piston upward by lightly tapping it from the bottom of the crankcase with the grip of a hammer.

**(When reassembling)**

- Before inserting the piston into the cylinder, apply enough engine oil to the cylinder.
- When inserting the piston into the cylinder, face the mark on the connecting rod to the injection pump.

■ **IMPORTANT**

- **Do not change the combination of cylinder and piston. Make sure of the position of each piston by marking. For example, mark "1" on the No. 1 piston.**
- **When inserting the piston into the cylinder, place the gap of the compression ring 1 on the opposite side of the combustion chamber and stagger the gaps of the compression ring 2 and oil ring making a right angle from the gap of the compression ring 1.**
- **Carefully insert the pistons using a piston ring compressor. Otherwise, their chrome-plated section may be scratched, causing trouble inside the cylinder.**

| | |
|---|---|
| **(A) Top Ring Gap** | **(a) 0.79 rad (45°)** |
| **(B) Second Ring Gap** | **(b) 0.79 rad (45°)** |
| **(C) Oil Ring Gap** | **(c) 0.79 rad (45°)** |
| **(D) Piston Pin Hole** | |

W10277450

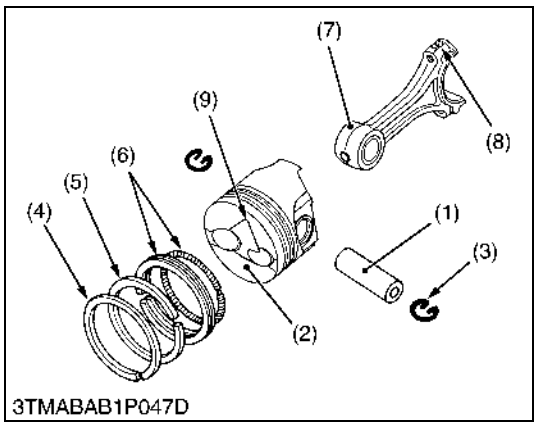

3TMABAB1P047D

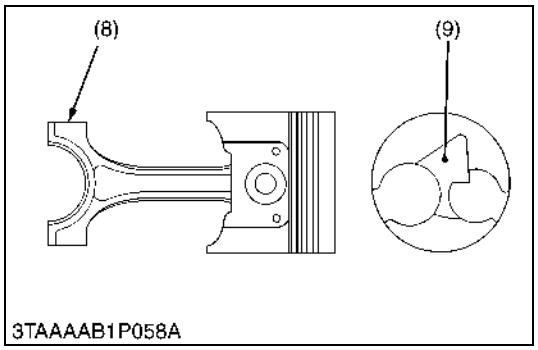

3TAAAAB1P058A

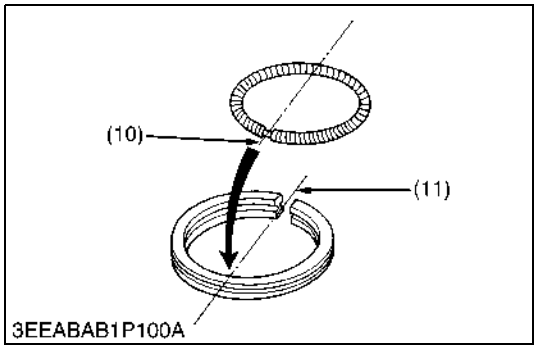

3EEABAB1P100A

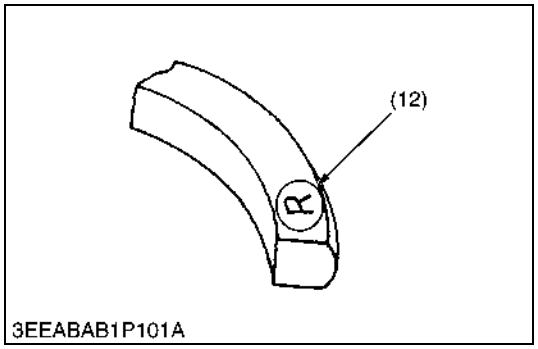

3EEABAB1P101A

## Piston Ring and Connecting Rod

1. Remove the piston rings using a piston ring tool.
2. Remove the piston pin (1), and separate the connecting rod (7) from the piston (2).

**(When reassembling)**

- When installing the rings, assemble the rings so that the manufacturer's mark (12) near the gap faces the top of the piston.
- When installing the oil ring onto the piston, place the expander joint (10) on the opposite side of the oil ring gap (11).
- Apply engine oil to the piston pin.
- When installing the piston pin, immerse the piston in 80 °C (176 °F) oil for 10 to 15 minutes and insert the piston pin to the piston.
- When installing the connecting rod to the piston, align the mark (8) on the connecting rod to the fan-shaped concave (9).

■ **IMPORTANT**

- **Mark the same number on the connecting rod and the piston so as not to change the combination.**

(1) Piston Pin
(2) Piston
(3) Piston Pin Snap Ring
(4) Top Ring
(5) Second Ring
(6) Oil Ring
(7) Connecting Rod
(8) Mark
(9) Fan-Shaped Concave
(10) Expander Joint
(11) Oil Ring Gap
(12) Manufacturer's Mark

W10281670

## (D) Crankshaft

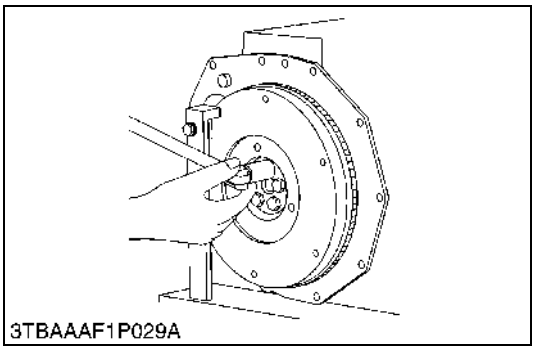
3TBAAAF1P029A

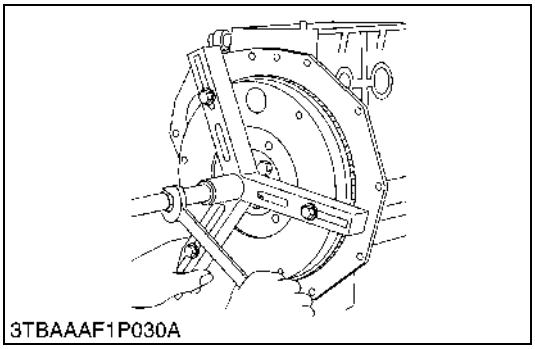
3TBAAAF1P030A

**Flywheel**

1. Lock the flywheel not to turn using flywheel stopper.
2. Remove the flywheel screws, except for two which must be loosened and left as they are.
3. Set a flywheel puller (Code No: 07916-32011), and remove the flywheel.

**(When reassembling)**

- Apply engine oil to the flywheel screws. And tighten them.

| | | |
|---|---|---|
| Tightening torque | Flywheel bolt | 53.9 to 58.8 N·m<br>5.5 to 6.0 kgf·m<br>39.8 to 43.4 ft-lbs |

W1030810

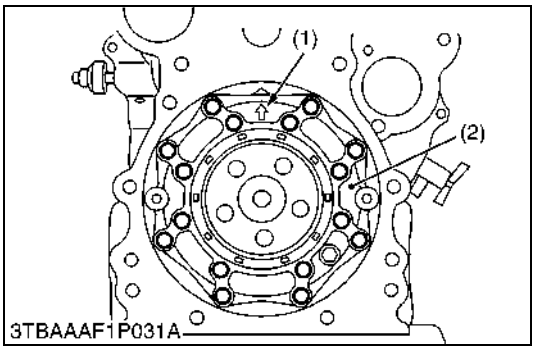

3TBAAAF1P031A

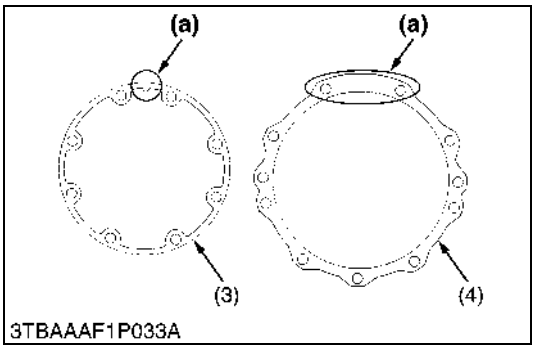

3TBAAAF1P033A

**Bearing Case Cover**

1. Remove the bearing case cover mounting screws. First, remove inside screws and then outside screws.

**(When reassembling)**

- Fit the bearing case gasket (3) and the bearing case cover gasket (4) with correct directions.
- Apply liquid-type gasket (Three Bond 1215 or its equivalent) to both sides of a new bearing case cover gasket.
- Install the bearing case cover to position the casting mark **"UP"** on it upward.
- Apply engine oil to the oil seal lip and take care that it is not rolled when installing.
- Tighten the bearing case cover mounting screws with even force on the diagonal line.

| | | |
|---|---|---|
| Tightening torque | Bearing case cover mounting screw | 9.8 to 11.3 N·m<br>1.00 to 1.15 kgf·m<br>7.2 to 8.3 ft-lbs |

(1) Mark
(2) Mark Bearing Case Cover
(3) Bearing Case Gasket
(4) Bearing Case Cover Gasket

**(a) Upside**

W1031168

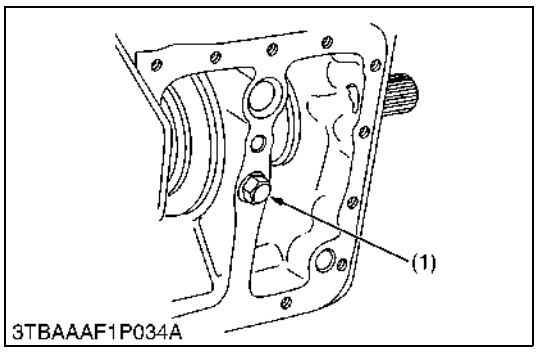


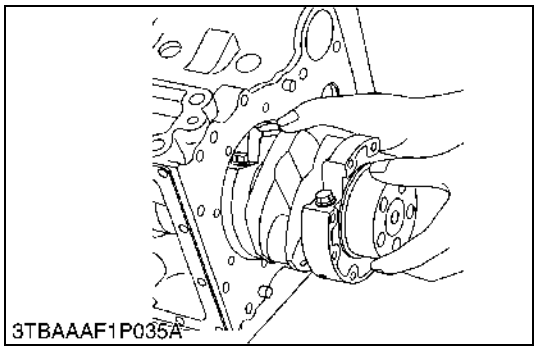


## Crankshaft

1. Remove the main bearing case screw 2 (1).
2. Pull out the crankshaft assembly.
3. Turn the crankshaft by 2.09 rad (120°) counterclockwise to set the crank pin of the second cylinder to the bottom dead center. Draw out the crankshaft until the crank pin of the first cylinder comes to the center of the third cylinder.
4. Repeat the above steps to draw out all the crankshafts.

**(When reassembling)**

- Install the crankshaft sub assembly, aligning the screw hole of main bearing case 2 with the screw hole of cylinder block.
- Apply engine oil to the main bearing case screw 2. And tighten it.

| | | |
|---|---|---|
| Tightening torque | Main bearing case screw 2 | 49.0 to 53.9 N·m<br>5.0 to 5.5 kgf·m<br>36.2 to 39.8 ft-lbs |

(1) Main Bearing Case Screw 2

W1031360

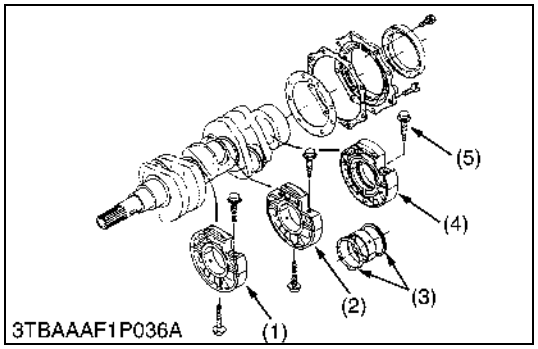


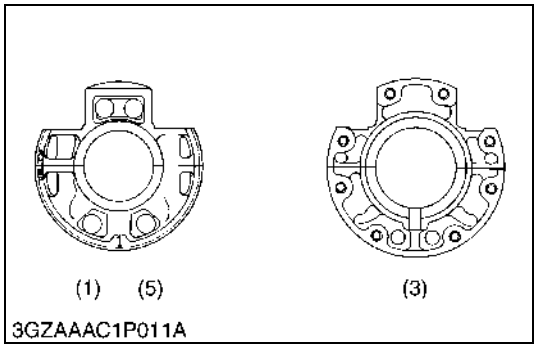


## Main Bearing Case Assembly

1. Remove the two bearing case screws 1 (4), and remove the main bearing case assembly (3), being careful with the thrust bearing (2) and crankshaft bearing 2.
2. Remove the main bearing case assemblies 1 (5), 2 (1).

**(When reassembling)**

- Clean the oil passage in the main bearing case.
- Apply clean engine oil on the crankshaft bearing 2 and thrust bearings.
- Install the main bearing case assemblies in the original positions. Since diameters of main bearing case vary, install them in order of makings (1, 2) from the gear case side.
- When installing the main bearing case assemblies 1 (5), 2 (1), face the mark **"FLYWHEEL"** to the flywheel.
- Be sure to install the thrust bearing (2) with its oil groove facing outward.
- Do not change the combination of crankshaft bearing and main bearing case.
- Confirm that the main bearing case moves smoothly after tightening the main bearing case screw 1 to the specified torque.

| | | |
|---|---|---|
| Tightening torque | Main bearing case screw 1 | 29.4 to 34.3 N·m<br>3.0 to 3.5 kgf·m<br>21.7 to 25.3 ft-lbs |

(1) Main Bearing Case Assembly 2
(2) Thrust Bearing
(3) Main Bearing Case Assembly
(4) Bearing Case Screw 1
(5) Main Bearing Case Assembly 1

W1031597

## (3) Servicing

## (A) Cylinder Head and Valve

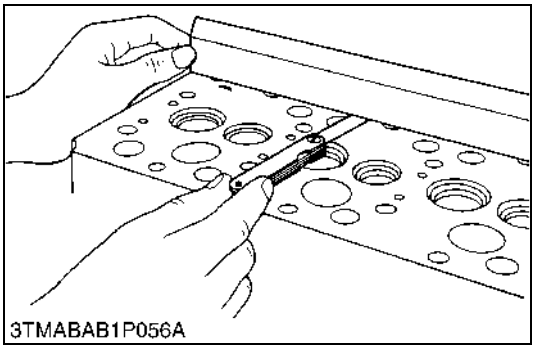
3TMABAB1P056A

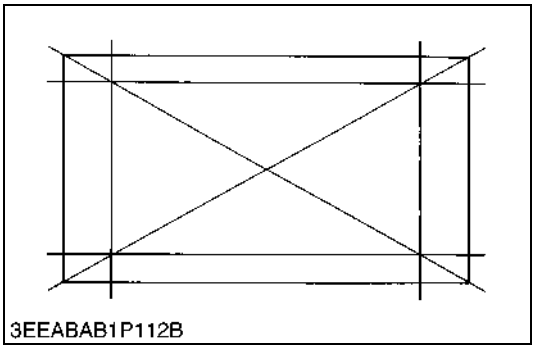
3EEABAB1P112B

### Cylinder Head Surface Flatness

1. Clean the cylinder head surface.
2. Place a straightedge on the cylinder head's four sides and two diagonal as shown in the figure.
3. Measure the clearance with a feeler gauge.
4. If the measurement exceeds the allowable limit, correct it with a surface grinder.

■ **IMPORTANT**
- **Do not place the straightedge on the combustion chamber.**
- **Be sure to check the valve recessing after correcting.**

| | | |
|---|---|---|
| Cylinder head surface flatness | Allowable limit | 0.05 mm<br>0.0020 in. |

W10301620

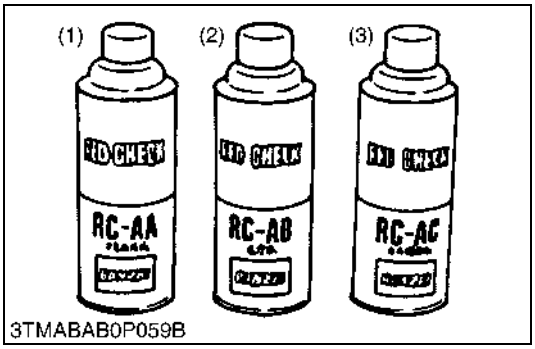

3TMABAB0P059B

### Cylinder Head Flaw

1. Prepare an air spray red check (Code No. 07909-31371).
2. Clean the surface of the cylinder head with detergent (2).
3. Spray the cylinder head surface with the red permeative liquid (1). Leave it five to ten minutes after spraying.
4. Wash away the red permeative liquid on the cylinder head surface with the detergent (2).
5. Spray the cylinder head surface with white developer (3).
6. If flawed, it can be identified as red marks.

(1) Red Permeative Liquid
(2) Detergent
(3) White Developer

W10303200

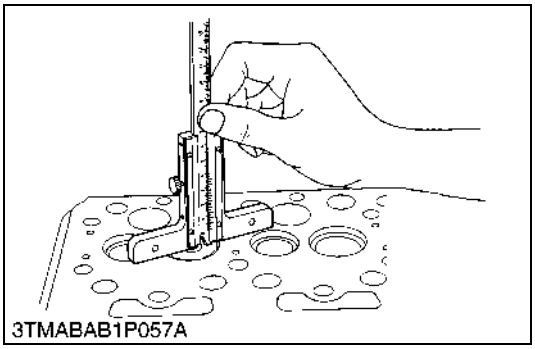
3TMABAB1P057A

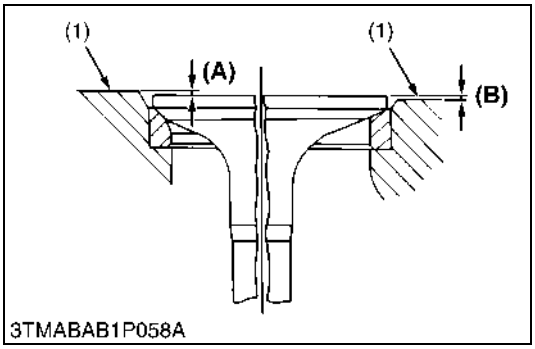

3TMABAB1P058A

### Valve Recessing

1. Clean the cylinder head surface, valve face and valve seat.
2. Insert the valve into the valve guide.
3. Measure the valve recessing with a depth gauge.
4. If the measurement exceeds the allowable limit, replace the valve.
5. If it still exceeds the allowable limit after replacing the valve, correct the valve seat face of the cylinder head with a valve seat cutter (Code No. 07909-33102) or valve seat grinder.
6. Then, correct the cylinder head surface with a surface grinder, or replace the cylinder head.

| | | |
|---|---|---|
| Valve recessing | Factory spec. | 0.05 (protrusion) to 0.15 (recessing) mm<br>0.0020 (protrusion) to 0.0059 (recessing) in. |
| | Allowable limit | 0.40 (recessing) mm<br>0.0157 (recessing) in. |

(1) Cylinder Head Surface
**(A) Recessing**
**(B) Protrusion**

W10305870

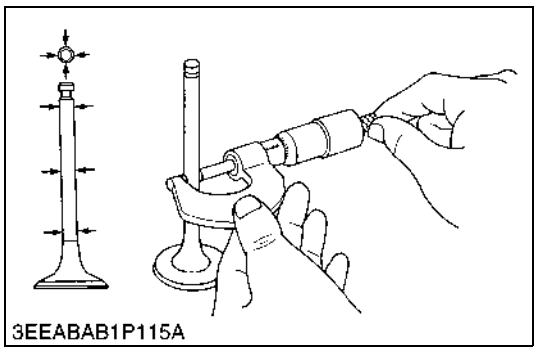
3EEABAB1P115A

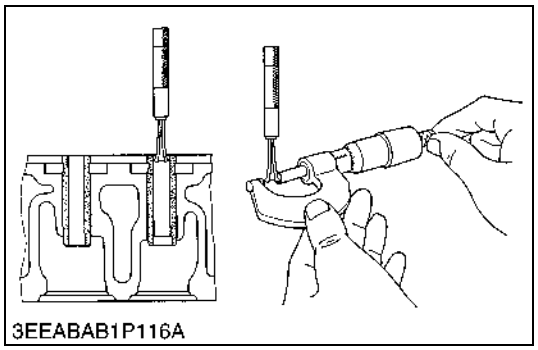
3EEABAB1P116A

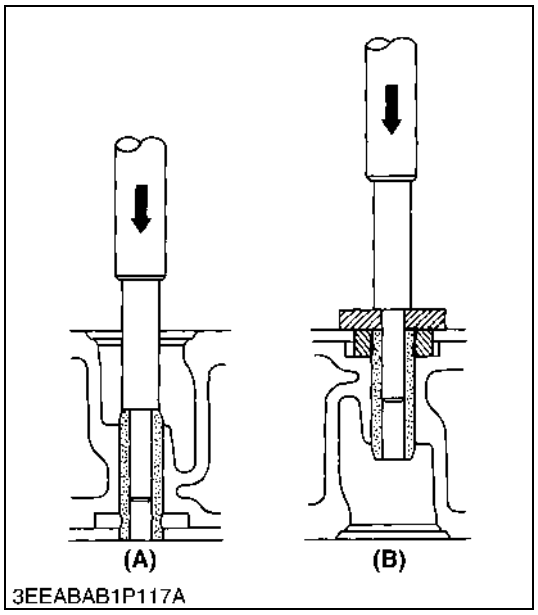

3EEABAB1P117A

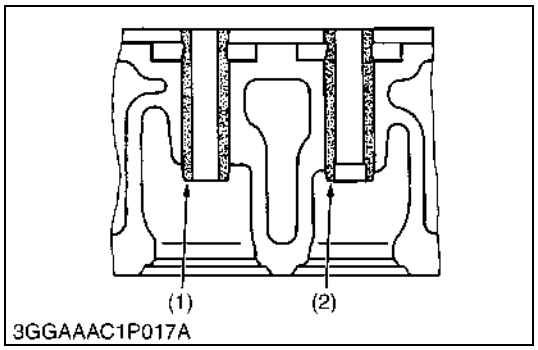

3GGAAAC1P017A

## Clearance between Valve Stem and Valve Guide

1. Remove carbon from the valve guide section.
2. Measure the valve stem O.D. with an outside micrometer.
3. Measure the valve guide I.D. with a small hole gauge, and calculate the clearance.
4. If the clearance exceeds the allowable limit, replace the valves. If it still exceeds the allowable limit, replace the valve guide.

| | | |
|---|---|---|
| Clearance between valve stem and valve guide | Factory spec. | 0.035 to 0.065 mm<br>0.00138 to 0.00256 in. |
| | Allowable limit | 0.10 mm<br>0.0039 in. |

| | | |
|---|---|---|
| Valve stem O.D. | Factory spec. | 6.960 to 6.975 mm<br>0.27402 to 0.27461 in. |
| Valve guide I.D. | Factory spec. | 7.010 to 7.025 mm<br>0.27599 to 0.27657 in. |

W10311740

## Replacing Valve Guide

**(When removing)**

1. Press out the used valve guide using a valve guide replacing tool.

**(When installing)**

1. Clean a new valve guide and valve guide bore, and apply engine oil to them.
2. Press in a new valve guide using a valve guide replacing tool.
3. Ream precisely the I.D. of the valve guide to the specified dimension.

| | | |
|---|---|---|
| Valve guide I.D.<br>(Intake and exhaust) | Factory spec. | 7.010 to 7.025 mm<br>0.27599 to 0.27657 in. |

■ **IMPORTANT**

- **Do not hit the valve guide with a hammer during replacement.**

(1) Intake Valve Guide
(2) Exhaust Valve Guide

**(A) When Removing**
**(B) When Installing**

W10314690

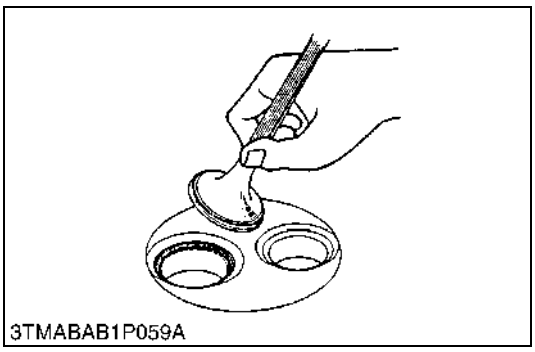
3TMABAB1P059A

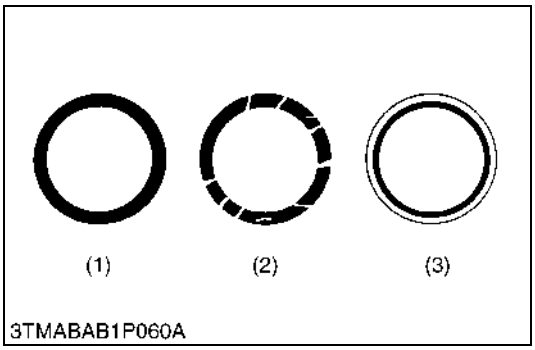

3TMABAB1P060A

## Valve Seating

1. Coat the valve face lightly with prussian blue and put the valve on its seat to check the contact.
2. If the valve does not seat all the way around the valve seat or the valve contact is less than 70 %, correct the valve seating as follows.
3. If the valve contact does not comply with the reference valve, replace the valve or correct the contact of valve seating.

(1) Correct
(2) Incorrect
(3) Incorrect

W1033143

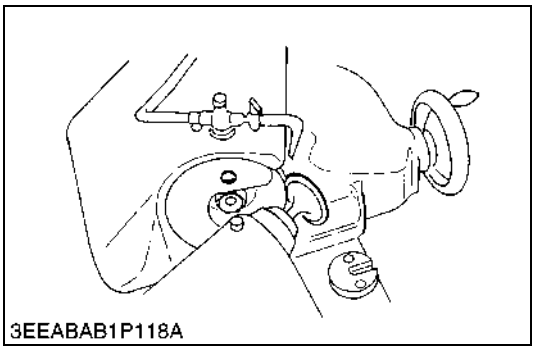
3EEABAB1P118A

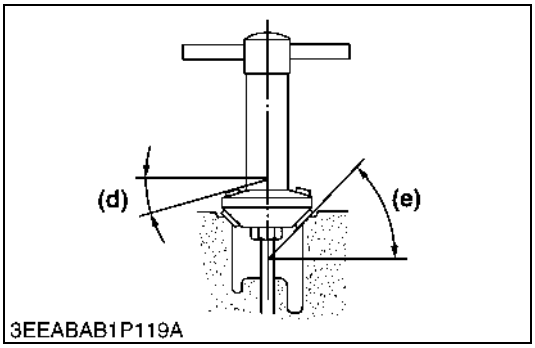

3EEABAB1P119A

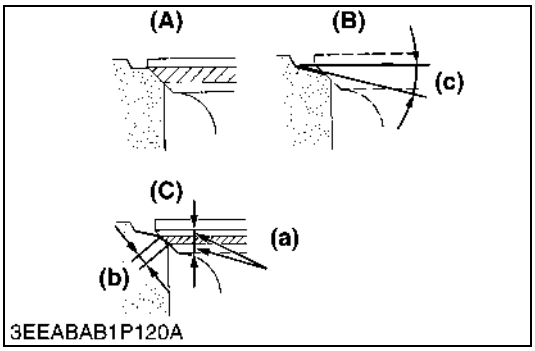

3EEABAB1P120A

## Correcting Valve and Valve Seat

■ **NOTE**

- **Before correcting the valve and seat, check the valve stem and the I.D. of the valve guide section, and repair them if necessary.**
- **After correcting the valve seat, be sure to check the valve recessing.**

**1) Correcting Valve**

1. Correct the valve with a valve refacer.

| | | |
|---|---|---|
| Intake valve | Factory spec. | 1.047 rad<br>60° |
| Exhaust valve | Factory spec. | 0.785 rad<br>45° |

**2) Correcting Valve Seat**

1. Slightly correct the seat surface with a 0.79 rad (45°) valve seat cutter (Code No. 07909-33102).
2. Fitting the valve, check the contact position of the valve face and seat surface with red lead. (Visual check) [If the valve has been used for a long period, the seat tends to come in contact with the upper side of the valve face.]
3. Grind the upper surface of the valve seat with a 0.26 rad (15°) valve seat cutter until the valve seat touches to the center of the valve face (so that a equals **b** as shown in the figure).
4. Grind the seat with a 0.79 rad (45°) valve seat cutter again, and visually recheck the contact between the valve and seat.
5. Repeat steps 3 and 4 until the correct contact is achieved.
6. Continue lapping until the seated rate becomes more than 70 % of the total contact area.

| | | |
|---|---|---|
| Valve seat angle | Factory spec. | 0.79 rad<br>45.0° |

**(a) Identical Dimensions**
**(b) Valve Seat Width**
**(c) 0.26 rad (15°)**
**(d) 0.26 rad (15°)**
**(e) 0.79 rad (45°)**

**(A) Check Contact**
**(B) Correct Seat Width**
**(C) Check Contact**

W10319540

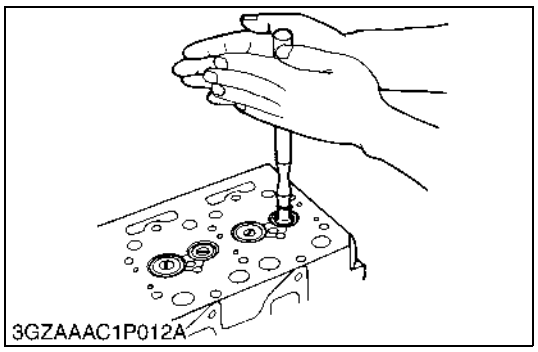


## Valve Lapping

1. Apply compound evenly to the valve lapping surface.
2. Insert the valve into the valve guide. Lap the valve onto its seat with a valve flapper or screwdriver.
3. After lapping the valve, wash the compound away and apply oil, then repeat valve lapping with oil.
4. Apply prussian blue to the contact surface to check the seated rate. If it is less than 70 %, repeat valve lapping again.

■ **IMPORTANT**

- **When valve lapping is performed, be sure to check the valve recessing and adjust the valve clearance after assembling the valve.**

W10309820

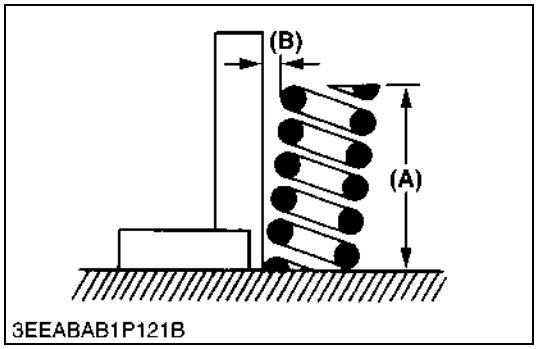


## Free Length and Tilt of Valve Spring

1. Measure the free length **(A)** of valve spring with venire calipers. If the measurement is less than the allowable limit, replace it.
2. Put the valve spring on a surface plate, place a square on the side of the valve spring.
3. Check to see if the entire side is in contact with the square. Rotate the valve spring and measure the maximum tilt **(B)**. If the measurement exceeds the allowable limit, replace it. Check the entire surface of the valve spring for scratches. If there is any defect, replace it.

| | | |
|---|---|---|
| Free length **(A)** | Factory spec. | 37.0 to 37.5 mm<br>1.457 to 1.476 in. |
| | Allowable limit | 36.5 mm<br>1.437 in. |

| | | |
|---|---|---|
| Tilt **(B)** | Allowable limit | 1.0 mm<br>0.039 in. |

W11157830

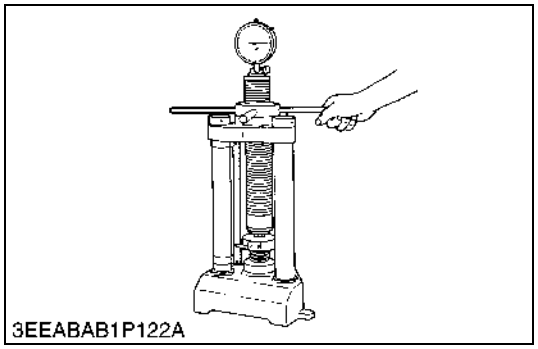


## Valve Spring Setting Load

1. Place the valve spring on a tester and compress it to the same length it is actually compressed the engine.
2. Read the compression load on the gauge.
3. If the measurement is less than the allowable limit, replace it.

| | | |
|---|---|---|
| Setting load /<br>Setting length | Factory spec. | 117.6 N / 31.0 mm<br>12.0 kgf / 31.0 mm<br>26.4 lbs / 1.220 in. |
| | Allowable limit | 100.0 N / 31.0 mm<br>10.2 kgf / 31.0 mm<br>22.5 lbs / 1.220 in. |

W11177330

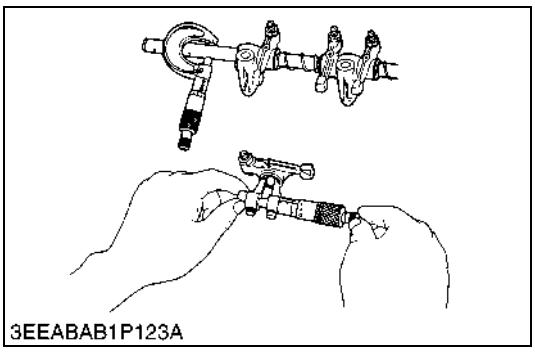
3EEABAB1P123A

## Oil Clearance between Rocker Arm and Rocker Arm Shaft

1. Measure the rocker arm shaft O.D. with an outside micrometer.
2. Measure the rocker arm I.D. with an inside micrometer, and then calculate the oil clearance.
3. If the oil clearance exceeds the allowable limit, replace the rocker arm and measure the oil clearance again. If it still exceeds the allowable limit, replace also the rocker arm shaft.

| | | |
|---|---|---|
| Oil clearance between rocker arm and rocker arm shaft | Factory spec. | 0.016 to 0.045 mm<br>0.00063 to 0.00177 in. |
| | Allowable limit | 0.10 mm<br>0.0039 in. |

| | | |
|---|---|---|
| Rocker arm shaft O.D. | Factory spec. | 11.973 to 11.984 mm<br>0.47138 to 0.47181 in. |
| Rocker arm I.D. | Factory spec. | 12.000 to 12.018 mm<br>0.47244 to 0.47315 in. |

W11199710

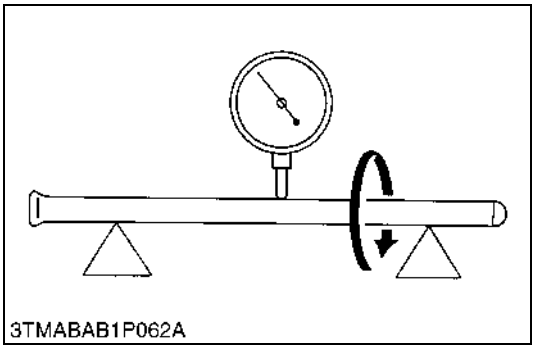
3TMABAB1P062A

## Push Rod Alignment

1. Place the push rod on V blocks.
2. Measure the push rod alignment.
3. If the measurement exceeds the allowable limit, replace the push rod.

| | | |
|---|---|---|
| Push rod alignment | Allowable limit | 0.25 mm<br>0.0098 in. |

W11220210

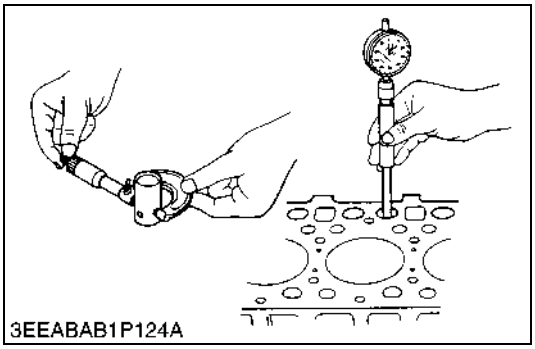
3EEABAB1P124A

## Oil Clearance between Tappet and Tappet Guide Bore

1. Measure the tappet O.D. with an outside micrometer.
2. Measure the I.D. of the tappet guide bore with a cylinder gauge, and calculate the oil clearance.
3. If the oil clearance exceeds the allowable limit or the tappet is damaged, replace the tappet.

| | | |
|---|---|---|
| Oil clearance between tappet and tappet guide bore | Factory spec. | 0.020 to 0.062 mm<br>0.00079 to 0.00244 in. |
| | Allowable limit | 0.07 mm<br>0.0028 in. |

| | | |
|---|---|---|
| Tappet O.D. | Factory spec. | 19.959 to 19.980 mm<br>0.78579 to 0.78661 in. |
| Tappet guide bore I.D. | Factory spec. | 20.000 to 20.021 mm<br>0.78740 to 0.78823 in. |

W11231410

## (B) Timing Gears, Camshaft and Fuel Camshaft

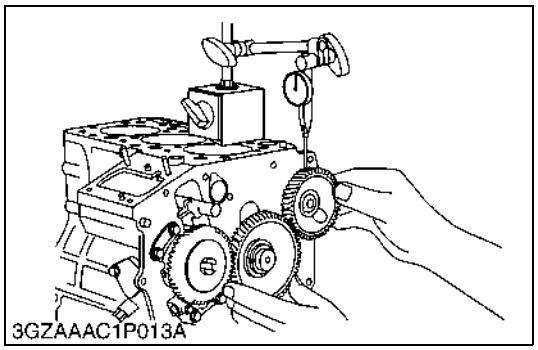


### Timing Gear Backlash

1. Set a dial indicator (lever type) with its tip on the gear tooth.
2. Move the gear to measure the backlash, holding its mating gear.
3. If the backlash exceeds the allowable limit, check the oil clearance of the shaft and the gear.
4. If the oil clearance is proper, replace the gear.

| | | |
|---|---|---|
| Backlash between idle gear and crank gear | Factory spec. | 0.032 to 0.115 mm<br>0.00120 to 0.00453 in. |
| | Allowable limit | 0.15 mm<br>0.0059 in. |

| | | |
|---|---|---|
| Backlash between idle gear and cam gear | Factory spec. | 0.036 to 0.114 mm<br>0.00142 to 0.00449 in. |
| | Allowable limit | 0.15 mm<br>0.0059 in. |

| | | |
|---|---|---|
| Backlash between idle gear and injection pump gear | Factory spec. | 0.034 to 0.116 mm<br>0.00134 to 0.00457 in. |
| | Allowable limit | 0.15 mm<br>0.0059 in. |

| | | |
|---|---|---|
| Backlash between injection pump gear and governor gear | Factory spec. | 0.030 to 0.117 mm<br>0.00118 to 0.00461 in. |
| | Allowable limit | 0.15 mm<br>0.0059 in. |

W11264830

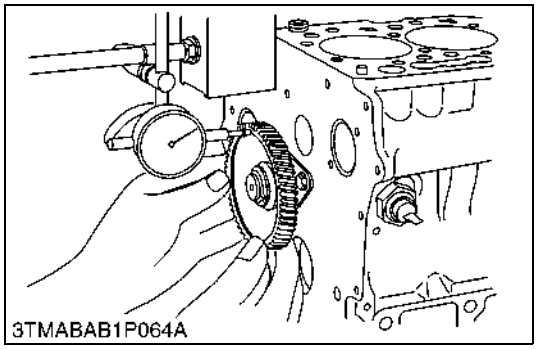


### Idle Gear Side Clearance

1. Set a dial indicator with its tip on the idle gear.
2. Measure the side clearance by moving the idle gear to the front and rear.
3. If the measurement exceeds the allowable limit, replace the idle gear collar.

| | | |
|---|---|---|
| Idle gear side clearance | Factory spec. | 0.20 to 0.51 mm<br>0.0079 to 0.0201 in. |
| | Allowable limit | 0.80 mm<br>0.0315 in. |

W11286770

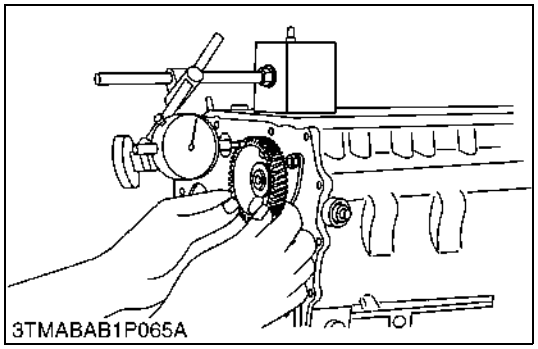


### Camshaft Side Clearance

1. Set a dial indicator with its tip on the camshaft.
2. Measure the side clearance by moving the cam gear to the font and rear.
3. If the measurement exceeds the allowable limit, replace the camshaft stopper.

| | | |
|---|---|---|
| Camshaft side clearance | Factory spec. | 0.07 to 0.22 mm<br>0.0028 to 0.0087 in. |
| | Allowable limit | 0.30 mm<br>0.0118 in. |

W11299720

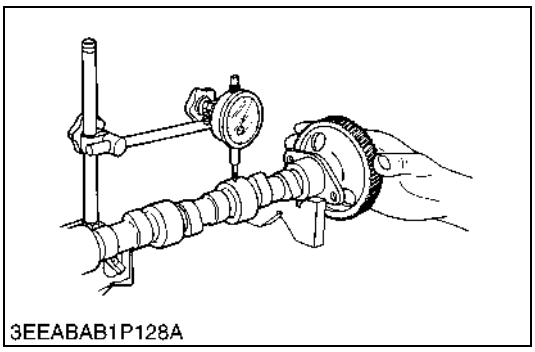
3EEABAB1P128A

## Camshaft Alignment

1. Support the camshaft with V blocks on the surface plate at both end journals.
2. Set a dial indicator with its tip on the intermediate journal.
3. Measure the camshaft alignment.
4. If the measurement exceeds the allowable limit, replace the camshaft.

| | | |
|---|---|---|
| Camshaft alignment | Allowable limit | 0.01 mm<br>0.0004 in. |

W11312720

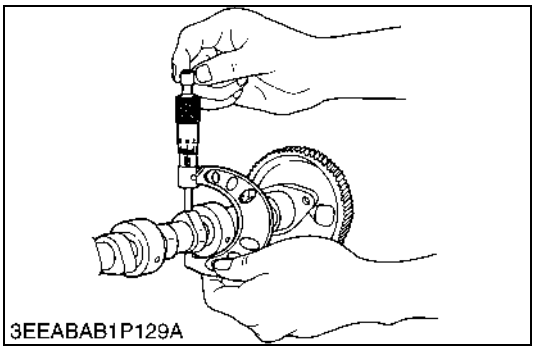
3EEABAB1P129A

## Cam Height

1. Measure the height of the cam at its highest point with an outside micrometer.
2. If the measurement is less than the allowable limit, replace the camshaft.

| | | |
|---|---|---|
| Cam height of intake | Factory spec. | 28.80 mm<br>1.1339 in. |
| | Allowable limit | 28.75 mm<br>1.1319 in. |

| | | |
|---|---|---|
| Cam height of exhaust | Factory spec. | 29.00 mm<br>1.1417 in. |
| | Allowable limit | 28.95 mm<br>1.1398 in. |

W11324040

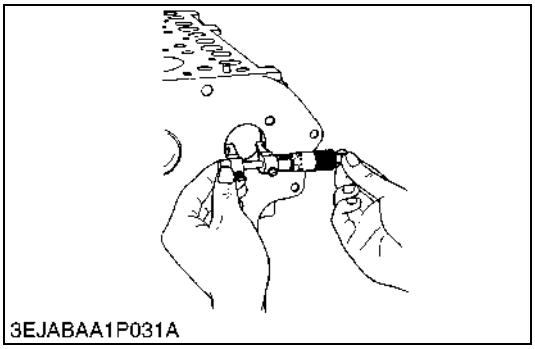
3EJABAA1P031A

## Oil Clearance of Camshaft Journal

1. Measure the camshaft journal O.D. with an outside micrometer.
2. Measure the camshaft bearing I.D. (cylinder block bore I.D.) for camshaft with an inside micrometer.
   Calculate the oil clearance.
3. If the oil clearance exceeds the allowable limit, replace the camshaft.

| | | |
|---|---|---|
| Oil clearance of camshaft journal | Factory spec. | 0.050 to 0.091 mm<br>0.00197 to 0.00358 in. |
| | Allowable limit | 0.15 mm<br>0.0059 in. |

| | | |
|---|---|---|
| Camshaft journal O.D. | Factory spec. | 35.934 to 35.950 mm<br>1.41473 to 1.41535 in. |
| Cylinder block bore I.D. | Factory spec. | 36.000 to 36.025 mm<br>1.41732 to 1.41830 in. |

W11335580

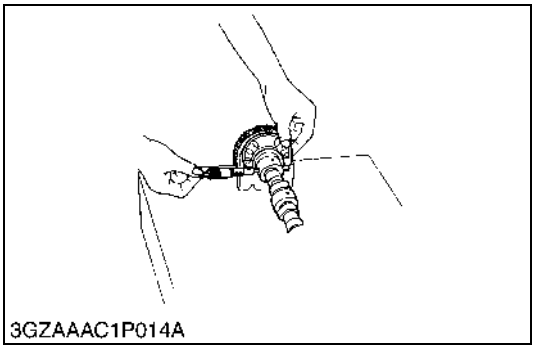
3GZAAAC1P014A

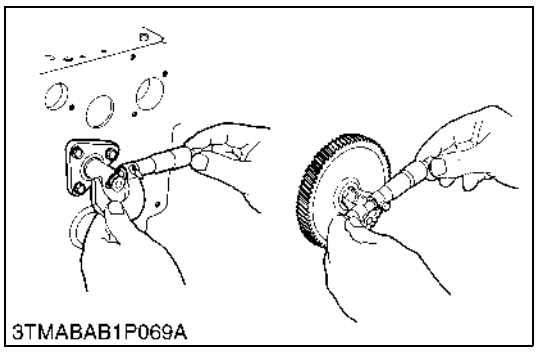


**Oil Clearance between Idle Gear Shaft and Idle Gear Bushing**

1. Measure the idle gear shaft O.D. with an outside micrometer.
2. Measure the idle gear bushing I.D. with an inside micrometer, and calculate the oil clearance.
3. If the oil clearance exceeds the allowable limit, replace the bushing.
   If it still exceeds the allowable limit, replace the idle gear shaft.

| | | |
|---|---|---|
| Oil clearance between idle gear shaft and idle gear bushing | Factory spec. | 0.020 to 0.054 mm<br>0.00079 to 0.00213 in. |
| | Allowable limit | 0.10 mm<br>0.0039 in. |

| | | |
|---|---|---|
| Idle gear shaft O.D. | Factory spec. | 25.967 to 25.980 mm<br>1.02232 to 1.02283 in. |
| Idle gear bushing I.D. | Factory spec. | 26.000 to 26.021 mm<br>1.02362 to 1.02445 in. |

W11356150

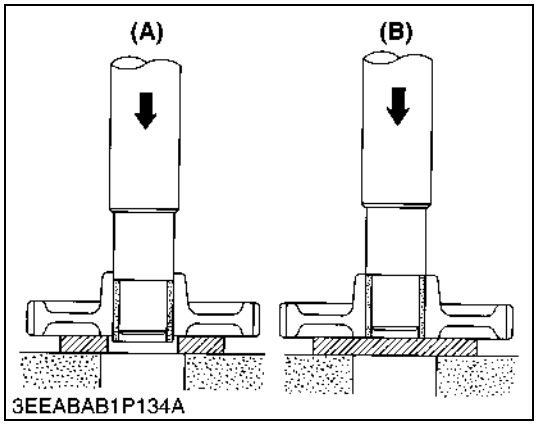


**Replacing Idle Gear Bushing**

**(When removing)**

1. Press out the used idle gear bushing using an idle gear bushing replacing tool.

**(When installing)**

1. Clean a new idle gear bushing and idle gear bore, and apply engine oil to them.
2. Press in a new brushing using an idle gear bushing replacing tool, until it is flush with the end of the idle gear.

**(A) When Removing** **(B) When Installing**

W11373220

## (C) Piston and Connecting Rod

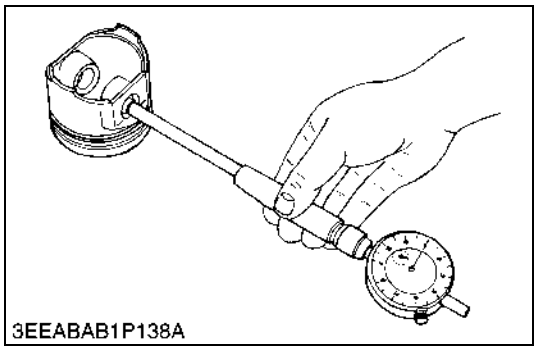


**Piston Pin Bore I.D.**

1. Measure the piston pin bore I.D. in both the horizontal and vertical directions with a cylinder gauge.
2. If the measurement exceeds the allowable limit, replace the piston.

| | | |
|---|---|---|
| Piston pin bore I.D. | Factory spec. | 22.000 to 22.013 mm<br>0.86614 to 0.86665 in. |
| | Allowable limit | 22.03 mm<br>0.8673 in. |

W11406200

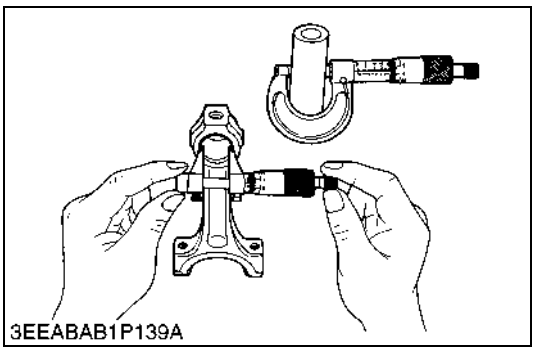


## Oil Clearance between Piton Pin and Small End Bushing

1. Measure the piston pin O.D. where it contacts the bushing with an outside micrometer.
2. Measure the small end bushing I.D. with an inside micrometer, and calculate the oil clearance.
3. If the oil clearance exceeds the allowable limit, replace the bushing. If it still exceeds the allowable limit, replace the piston pin.

| | | |
|---|---|---|
| Oil clearance between piston pin and small end bushing | Factory spec. | 0.014 to 0.038 mm<br>0.00055 to 0.00150 in. |
| | Allowable limit | 0.15 mm<br>0.0059 in. |

| | | |
|---|---|---|
| Piston pin O.D. | Factory spec. | 22.002 to 22.011 mm<br>0.86622 to 0.86657 in. |
| Small end bushing I.D. | Factory spec. | 22.025 to 22.040 mm<br>0.86713 to 0.86771 in. |

W11420110

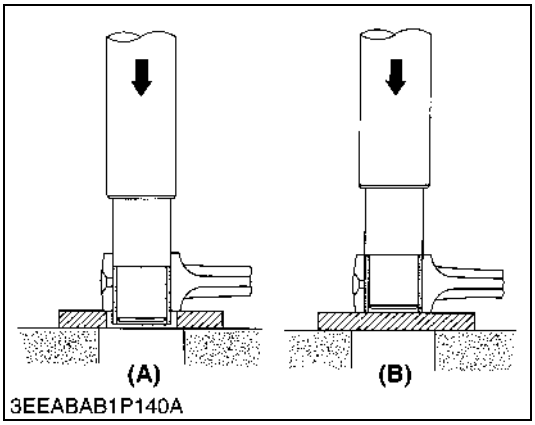


## Replacing Small End Bushing

**(When removing)**

1. Press out the used bushing using a small end bushing replacing tool.

**(When installing)**

1. Clean a new small end bushing and bore, and apply engine oil to them.
2. Insert a new bushing onto the tool and press-fit it with a press so that the seam (1) of bushing positions as shown in the figure, until it is flash with the connecting rod.
3. Drill a hole to the bushing with aligning the oil hole (2) of connecting rod using 4.0 mm dia. (0.157 in. dia.) drill.

■ **NOTE**

- **Be sure to chamfer the oil hole circumference with an oil stone.**

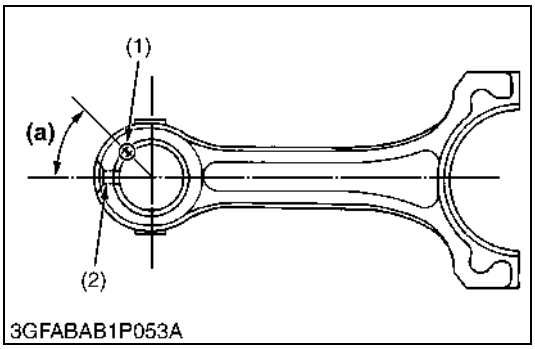


(1) Seam
(2) Oil Hole

**(A) When Removing**
**(B) When Installing**

**(a) 0.79 rad (45°)**

W11437590

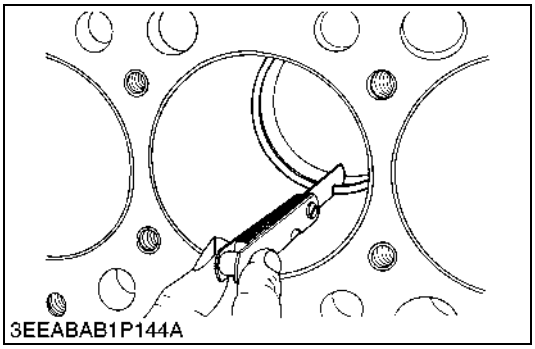


## Piston Ring Gap

1. Insert the piston ring into the lower part of the cylinder (the least worn out part) with a piston ring compressor and piston.
2. Measure the ring gap with a feeler gauge.
3. If the measurement exceeds the allowable limit, replace the piston ring.

| | | | |
|---|---|---|---|
| Piston ring gap | Factory spec. | Top ring<br>Second ring | 0.25 to 0.45 mm<br>0.0098 to 0.0177 in. |
| | | Oil ring | 0.25 to 0.40 mm<br>0.0098 to 0.0157 in. |
| | Allowable limit | Top ring<br>Second ring | 1.25 mm<br>0.0492 in. |
| | | Oil ring | |

W11466710

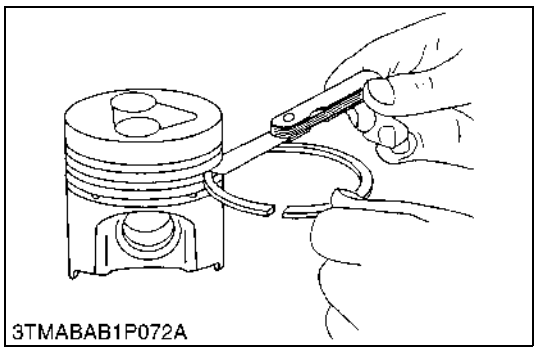


## Clearance between Piston Ring and Piston Ring Groove

1. Clean the rings and the ring grooves, and install each ring in its groove.
2. Measure the clearance between the ring and the groove with a feeler gauge.
3. If the clearance exceeds the allowable limit, replace the piston ring.
4. If the clearance still exceeds the allowable limit after replacing the ring, replace the piston.

| | | | |
|---|---|---|---|
| Clearance between piston ring and piston ring groove | Factory spec. | Second ring | 0.085 to 0.112 mm<br>0.00335 to 0.00441 in. |
| | | Oil ring | 0.020 to 0.055 mm<br>0.00079 to 0.00217 in. |
| | Allowable limit | Second ring | 0.20 mm<br>0.0079 in. |
| | | Oil ring | 0.15 mm<br>0.0059 in. |

W11485500

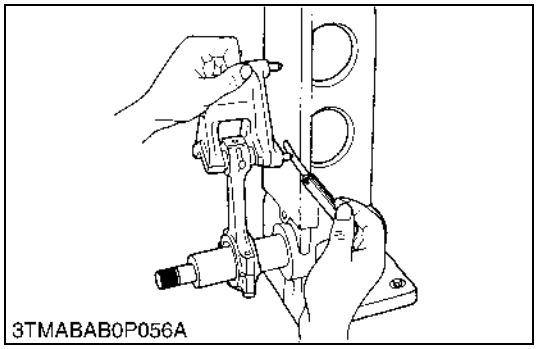


## Connecting Rod Alignment

■ **NOTE**

- **Since the I.D. of the connecting rod small end bushing is the basis of this check, check the bushing for wear beforehand.**

1. Remove the crankpin bearing, and install the connecting rod cap.
2. Install the piston pin in the connecting rod.
3. Install the connecting rod on the connecting rod alignment tool (Code No. 07909-31661).
4. Put a gauge over the piston pin, and move it against the face plate.
5. If the gauge does not fit squarely against the face plate, measure the space between the pin of the gauge and the face plate.
6. If the measurement exceeds the allowable limit, replace the connecting rod.

| | | |
|---|---|---|
| Space between gauge pin and face plate | Allowable limit | 0.05 mm<br>0.0020 in. |

W11499650

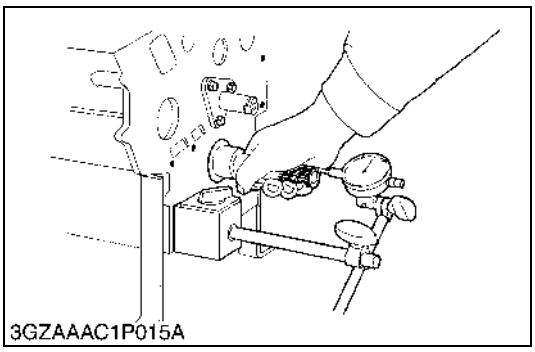


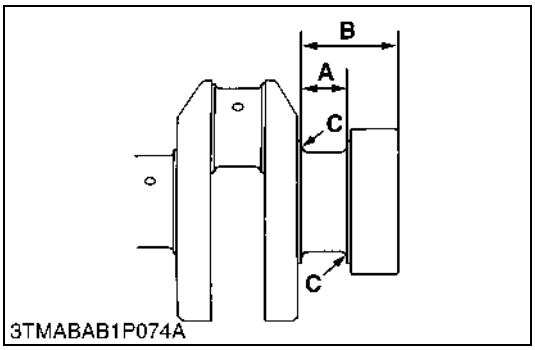


## Crankshaft Side Clearance

1. Set a dial indicator with its tip on the end of the crankshaft.
2. Measure the side clearance by moving the crankshaft to the front and rear.
3. If the same size bearing is useless because of the crankshaft journal wear, replace it with an oversize one referring to the table and the figure.

| | | |
|---|---|---|
| Crankshaft side clearance | Factory spec. | 0.15 to 0.25 mm<br>0.0059 to 0.0098 in. |
| | Allowable limit | 0.50 mm<br>0.0197 in. |

**(Reference)**

- Oversize thrust bearing assembly

| Oversize | Bearing | Code Number | Marking |
|---|---|---|---|
| 0.2 mm<br>0.008 in. | Thrust bearing 1 02 | 15521-23950 | 020 OS |
| | Thrust bearing 2 02 | 19202-23970 | 020 OS |
| 0.4 mm<br>0.016 in. | Thrust bearing 1 04 | 15521-23960 | 040 OS |
| | Thrust bearing 2 04 | 19202-23980 | 040 OS |

- Oversize dimensions of crankshaft journal

| Oversize | 0.2 mm<br>0.008 in. | 0.4 mm<br>0.016 in. |
|---|---|---|
| Dimension **A** | 28.20 to 28.25 mm<br>1.1102 to 1.1122 in. | 28.40 to 28.45 mm<br>1.1181 to 1.1201 in. |
| Dimension **B** | 51.5 to 51.7 mm<br>2.028 to 2.035 in. | 51.6 to 51.8 mm<br>2.031 to 2.039 in. |
| Dimension **C** | 2.3 to 2.7 mm radius<br>0.091 to 0.106 in. radius | 2.3 to 2.7 mm radius<br>0.091 to 0.106 in. radius |
| The crankshaft journal must be fine-finished to higher than ∇∇∇∇. (0.8-S) | | |

W11586190

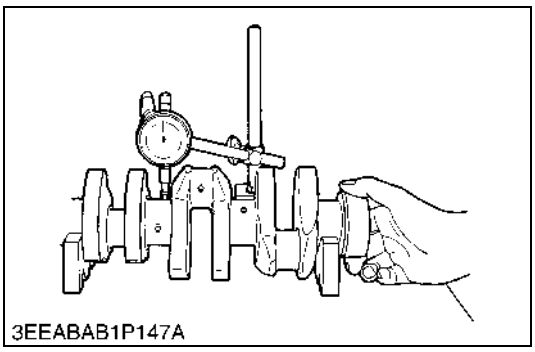


## Crankshaft Alignment

1. Support the crankshaft with V blocks on the surface plate at both end journals.
2. Set a dial indicator with its tip on the intermediate journal.
3. Measure the crankshaft alignment.
4. If the measurement exceeds the allowable limit, replace the crankshaft.

| | | |
|---|---|---|
| Crankshaft alignment | Allowable limit | 0.02 mm<br>0.0008 in. |

W11613530

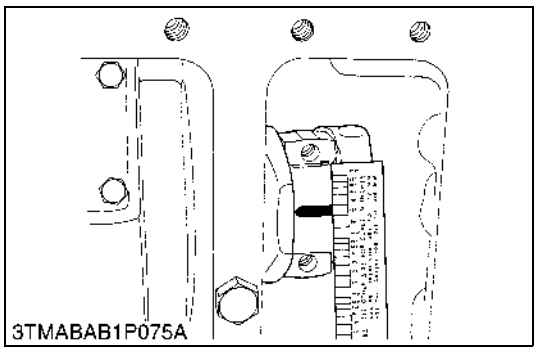


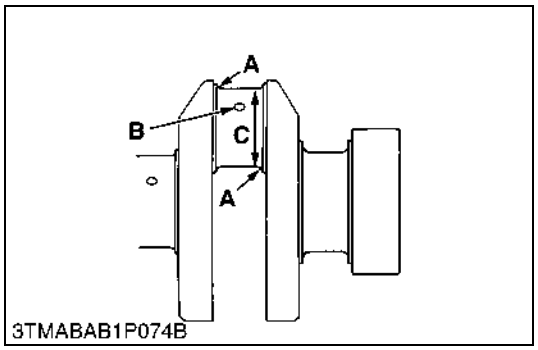


**Oil Clearance between Crankpin and Crankpin Bearing**

1. Clean the crankpin and crankpin bearing.
2. Put a strip of plastigage (Code No. 07909-30241) on the center of the crankpin.
3. Install the connecting rod cap and tighten the connecting rod screws to the specified torque, and remove the cap again.
4. Measure the amount of the flattening with the scale, and get the oil clearance.
5. If the oil clearance exceeds the allowable limit, replace the crankpin bearing.
6. If the same size bearing is useless because of the crankpin wear, replace it with an undersize one referring to the table and the figure.

■ **NOTE**

- **Never insert the plastigage into the crankpin oil hole.**
- **Be sure not to move the crankshaft while the connecting rod screws are tightened.**

| | | |
|---|---|---|
| Oil clearance between crankpin and crankpin bearing | Factory spec. | 0.029 to 0.091mm<br>0.00114 to 0.00358 in. |
| | Allowable limit | 0.20 mm<br>0.0079 in. |

| | | |
|---|---|---|
| Crankpin O.D. | Factory spec. | 39.959 to 39.975 mm<br>1.57319 to 1.57382 in. |
| Crankpin bearing I.D. | Factory spec. | 40.004 to 40.050 mm<br>1.57496 to 1.57677 in. |

**(Reference)**

- Undersize crankpin bearing

| Undersize | Bearing | Code Number | Marking |
|---|---|---|---|
| 0.2 mm<br>0.008 in. | Crankpin bearing 02 | 16241-22970 | 020 US |
| 0.4 mm<br>0.016 in. | Crankpin bearing 04 | 16241-22980 | 040 US |

- Undersize dimensions of crankpin

| Undersize / Dimension | 0.2 mm<br>0.008 in. | 0.4 mm<br>0.016 in. |
|---|---|---|
| **A** | 2.8 to 3.2 mm radius<br>0.1102 to 0.1260 in. radius | 2.8 to 3.2 mm radius<br>0.1102 to 0.1260 in. radius |
| ***B** | 1.0 to 1.5 mm relief<br>0.0394 to 0.0591 in. relief | 1.0 to 1.5 mm relief<br>0.0394 to 0.0591 in. relief |
| **C** | 39.759 to 39.775 mm<br>1.56531 to 1.56594 in. | 39.559 to 39.575 mm<br>1.55744 to 1.55807 in. |
| (0.8-S)<br>The crankpin must be fine-finished to higher than ∇∇∇∇.<br>*Holes to be de-burred and edges rounded with 1.0 to 1.5 mm (0.0394 to 0.0591 in.) relief. | | |

W11625390

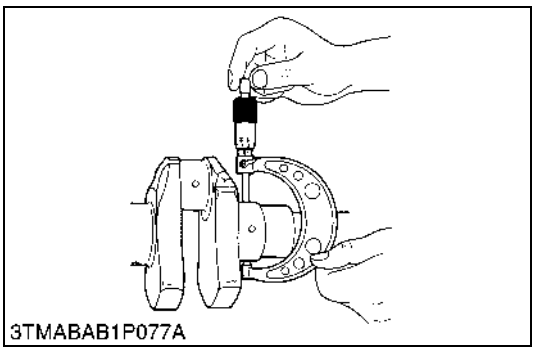
3TMABAB1P077A

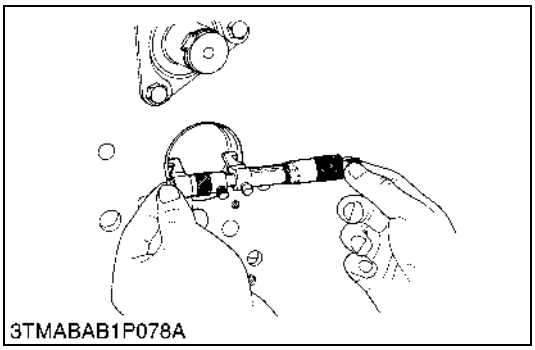
3TMABAB1P078A

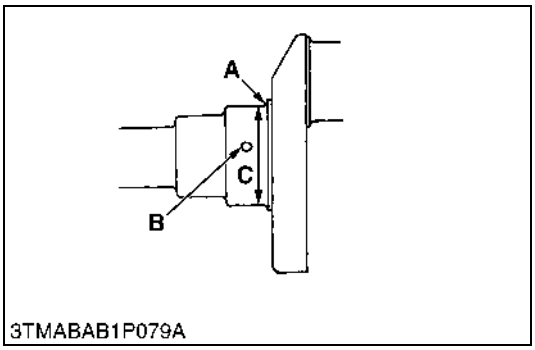

3TMABAB1P079A

## Oil Clearance between Crankshaft Journal and Crankshaft Bearing 1

1. Measure the O.D. of the crankshaft front journal with an outside micrometer.
2. Measure the I.D. of the crankshaft bearing 1 with an inside micrometer, and calculate the oil clearance.
3. If the oil clearance exceeds the allowable limit, replace the crankshaft bearing 1.
4. If the same size bearing is useless because of the crankshaft journal wear, replace it with an undersize one referring to the table and the figure.

| | | |
|---|---|---|
| Oil Clearance between crankshaft journal and crankshaft bearing 1 | Factory spec. | 0.034 to 0.114 mm<br>0.00134 to 0.00449 in. |
| | Allowable limit | 0.20 mm<br>0.0079 in. |

| | | |
|---|---|---|
| Crankshaft journal O.D. | Factory spec. | 47.934 to 47.950 mm<br>1.88716 to 1.88779 in. |
| Crankshaft bearing 1 I.D. | Factory spec. | 47.984 to 48.048 mm<br>1.88913 to 1.89165 in. |

**(Reference)**

- Undersize crankshaft bearing 1

| Undersize | Bearing | Code Number | Marking |
|---|---|---|---|
| 0.2 mm<br>0.008 in. | Crankshaft bearing 1 02 | 16241-23910 | 020 US |
| 0.4 mm<br>0.016 in. | Crankshaft bearing 1 04 | 16241-23920 | 040 US |

- Undersize dimensions of crankshaft journal

| Undersize / Dimension | 0.2 mm<br>0.008 in. | 0.4 mm<br>0.016 in. |
|---|---|---|
| **A** | 2.3 to 2.7 mm radius<br>0.0906 to 0.1063 in. radius | 2.3 to 2.7 mm radius<br>0.0906 to 0.1063 in. radius |
| ***B** | 1.0 to 1.5 mm relief<br>0.0394 to 0.0591 in. relief | 1.0 to 1.5 mm relief<br>0.0394 to 0.0591 in. relief |
| **C** | 47.734 to 47.750 mm<br>1.87929 to 1.87992 in. | 47.534 to 47.550 mm<br>1.87142 to 1.87204 in. |
| (0.8-S)<br>The crankshaft journal must be fine-finished to higher than ∇∇∇∇.<br>*Holes to be de-burred and edges rounded with 1.0 to 1.5 mm (0.0394 to 0.0591 in.) relief. | | |

W10323470

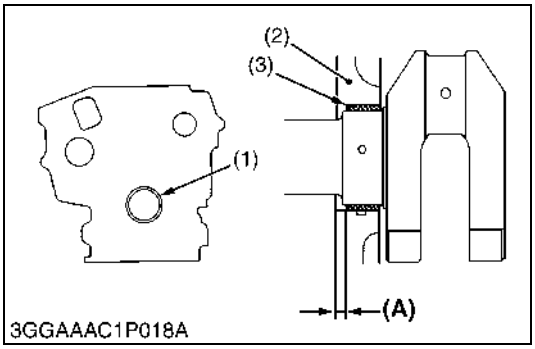

3GGAAAC1P018A

## Replacing Crankshaft Bearing 1

**(When removing)**

1. Press out the used crankshaft bearing 1 using a crankshaft bearing 1 replacing tool.

**(When installing)**

1. Clean a new crankshaft bearing 1 and crankshaft journal bore, and apply engine oil to them.
2. Using a crankshaft bearing 1 replacing tool, press in a new bearing 1 (2) so that its seam (1) directs toward the exhaust manifold side. (See figure.)

| | | |
|---|---|---|
| Dimension **(A)** | Factory spec. | 0 to 0.3 mm<br>0 to 0.012 in. |

(1) Seam
(2) Crankshaft Bearing 1
(3) Cylinder Block

W10342000

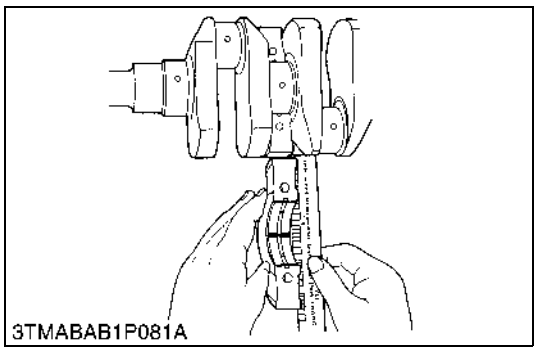


**Oil Clearance between Crankshaft Journal and Crankshaft Bearing 2 and Crankshaft Bearing 3 (To be continued)**

1. Put a strip of plastigage (Code No. 07909-30241) on the center of the journal.
2. Install the bearing case and tighten the bearing case screws 1 to the specified torque, and remove the bearing case again.
3. Measure the amount of the flattening with the scale, and get the oil clearance.
4. If the oil clearance exceeds the allowable limit, replace the crankshaft bearing 2 or 3.
5. If the same size bearing is useless because of the crankshaft journal wear, replace it with an undersize one referring to the table and figure.

■ **NOTE**

- **Be sure not to move the crankshaft while the bearing case screws are tightened.**

| | | |
|---|---|---|
| Oil clearance between crankshaft journal and crankshaft bearing 2 | Factory spec. | 0.034 to 0.095 mm<br>0.00134 to 0.00374 in. |
| | Allowable limit | 0.20 mm<br>0.0079 in. |

| | | |
|---|---|---|
| Crankshaft journal O.D. (Intermediate) | Factory spec. | 47.934 to 47.950 mm<br>1.88716 to 1.88779 in. |
| Crankshaft bearing 2 I.D. | Factory spec. | 47.984 to 48.029 mm<br>1.88913 to 1.89091 in. |

| | | |
|---|---|---|
| Oil clearance between crankshaft journal and crankshaft bearing 3 | Factory spec. | 0.034 to 0.098 mm<br>0.00134 to 0.00386 in. |
| | Allowable limit | 0.20 mm<br>0.0079 in. |

| | | |
|---|---|---|
| Crankshaft journal O.D. (Flywheel side) | Factory spec. | 51.921 to 51.940 mm<br>2.04413 to 2.04488 in. |
| Crankshaft bearing 3 I.D. | Factory spec. | 51.974 to 52.019 mm<br>2.04622 to 2.04799 in. |

**(Reference)**

- Undersize crankshaft bearing 2 and 3

| Undersize | Bearing | Code Number | Marking |
|---|---|---|---|
| 0.2 mm<br>0.008 in. | Crankshaft bearing 2 02 | 16241-23930 | 020 US |
| | Crankshaft bearing 3 02 | 16241-23860 | 020 US |
| 0.4 mm<br>0.016 in. | Crankshaft bearing 2 04 | 16241-23940 | 040 US |
| | Crankshaft bearing 3 04 | 16241-23870 | 040 US |

W10344030

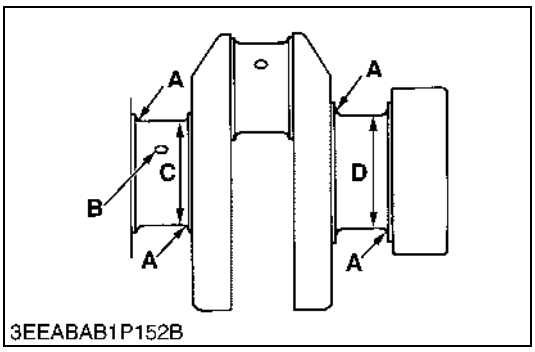


## Oil Clearance between Crankshaft Journal and Crankshaft Bearing 2 and Crankshaft Bearing 3 (Continued)

**(Reference)**

- Undersize dimensions of crankshaft journal

| Undersize / Dimension | 0.2 mm<br>0.008 in. | 0.4 mm<br>0.016 in. |
|---|---|---|
| **A** | 2.3 to 2.7 mm radius<br>0.0906 to 0.1063 in. radius | 2.3 to 2.7 mm radius<br>0.0906 to 0.1063 in. radius |
| ***B** | 1.0 to 1.5 mm relief<br>0.0394 to 0.0591 in. relief | 1.0 to 1.5 mm relief<br>0.0394 to 0.0591 in. relief |
| **C** | 47.734 to 47.750 mm<br>1.87929 to 1.87992 in. | 47.534 to 47.550 mm<br>1.87141 to 1.87204 in. |
| **D** | 51.721 to 51.740 mm<br>2.03626 to 2.03700 in. | 51.521 to 51.540 mm<br>2.02838 to 2.02913 in. |
| (0.8-S)<br>The crankshaft journal must be fine-finished to higher than ∇∇∇∇.<br>*Holes to be de-burred and edges rounded with 1.0 to 1.5 mm (0.0394 to 0.0591 in.) relief. | | |

W1115905

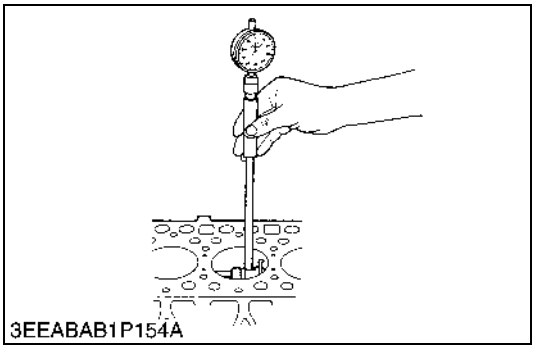


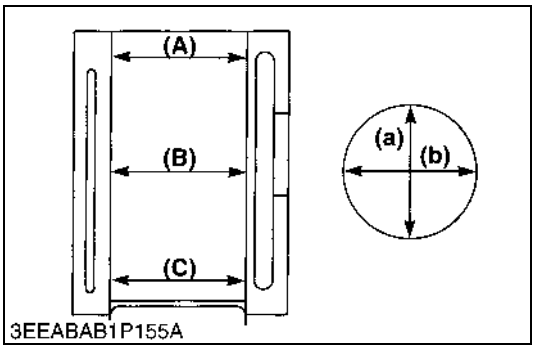


## Cylinder Wear

1. Measure the cylinder liner I.D. at the six positions (see figure) with a cylinder gauge to find the maximum and minimum I.D.'s.
2. Get the difference (Maximum wear) between the maximum and the minimum I.D.'s.
3. If the wear exceeds the allowable limit, bore and hone to the oversize dimension. (Refer to "Correcting Cylinder".)
4. Visually check the cylinder wall for scratches. If deep scratches are found, the cylinder should be bored. (Refer to "Correcting Cylinder".)

| | | |
|---|---|---|
| Cylinder liner I.D. | Factory spec. | 76.000 to 76.019 mm<br>2.99213 to 2.99287 in. |
| | Allowable limit | 76.169 mm<br>2.99878 in. |

**(A) Top**
**(B) Middle**
**(C) Bottom (Skirt)**

**(a) Right-angled to Piston Pin**
**(b) Piston Pin Direction**

W10360060

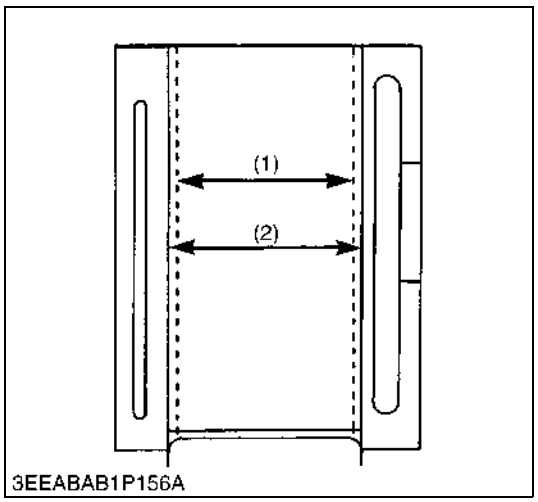


## Correcting Cylinder

1. When the cylinder is worn beyond the allowable limit, bore and hone it to the specified dimension.

| | | |
|---|---|---|
| Oversized cylinder liner I.D. | Factory spec. | 76.500 to 76.519 mm<br>3.01181 to 3.01256 in. |
| | Allowable limit | 76.669 mm<br>3.01846 in. |
| Finishing | Hone to 1.2 to 2.0 μ R max.<br>∇∇∇<br>(0.0472 to 0.0787 in. R max.) | |

2. Replace the piston and piston rings with oversize ones.

| Oversize | Part Name | Marking |
|---|---|---|
| 0.5 mm<br>0.0197 in. | Piston 05 | 05 OS |
| | Piston ring 05 assembly | 05 OS |

■ **NOTE**

- **When the oversize cylinder is worn beyond the allowable limit, replace the cylinder block with a new one.**

(1) Cylinder I.D. (Before Correction) (2) Oversized Cylinder I.D.

W10367470

# [3] LUBRICATING SYSTEM

## (1) Checking

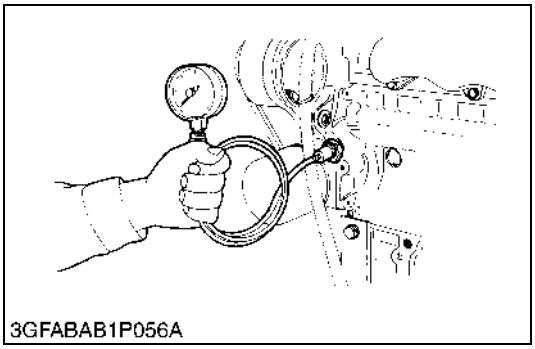
3GFABAB1P056A

**Engine Oil Pressure**

1. Remove the engine oil pressure switch, and set a oil pressure tester (Code No. 07916-32032). (Adapter screw size : PT 1/8)
2. Start the engine. After warming up, measure the oil pressure of both idling and rated speeds.
3. If the oil pressure is less than the allowable limit, check the following.

- Engine oil insufficient
- Oil pump defective
- Oil strainer clogged
- Oil filter cartridge clogged
- Oil gallery clogged
- Excessive oil clearance
- Foreign matter in the relief valve

| | | | |
|---|---|---|---|
| Engine oil pressure | Factory spec. | At idle speed | More than 49 kPa<br>0.5 kgf/cm$^2$<br>7 psi |
| | | At rated speed | 196 to 441 kPa<br>2.0 to 4.5 kgf/cm$^2$<br>28 to 64 psi |
| | Allowable limit | At rated speed | 147 kPa<br>1.5 kgf/cm$^2$<br>27 psi |

**(When reassembling)**

- After checking the engine oil pressure, tighten the engine oil pressure switch to the specified torque.

| | | |
|---|---|---|
| Tightening torque | Oil pressure switch | 14.7 to 19.6 N·m<br>1.5 to 2.0 kgf·m<br>10.8 to 14.5 ft-lbs |

W10373890

## (2) Servicing

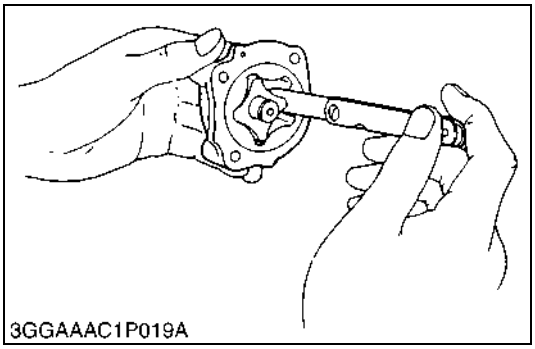
3GGAAAC1P019A

**Clearance between Inner Rotor and Outer Rotor**

1. Measure the clearance between lobes of the inner rotor and the outer rotor with a feeler gauge.
2. If the clearance exceeds the factory specifications, replace the oil pump rotor assembly.

| | | |
|---|---|---|
| Rotor lobe clearance | Factory spec. | 0.06 to 0.18 mm<br>0.0024 to 0.0071 in. |

W10378950

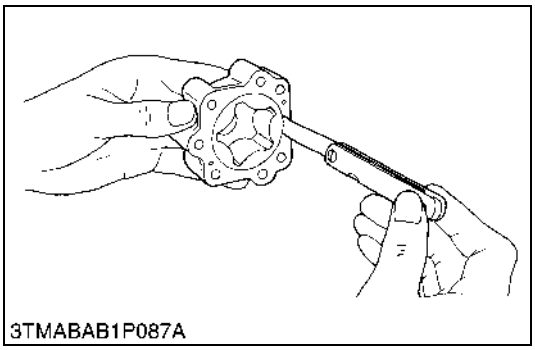
3TMABAB1P087A

**Clearance between Outer Rotor and Pump Body**

1. Measure the clearance between the outer rotor and the pump body with a feeler gauge.
2. If the clearance exceeds the factory specifications, replace the oil pump rotor assembly.

| | | |
|---|---|---|
| Clearance between outer rotor and pump body | Factory spec. | 0.100 to 0.180 mm<br>0.0039 to 0.0071 in. |

W10381420

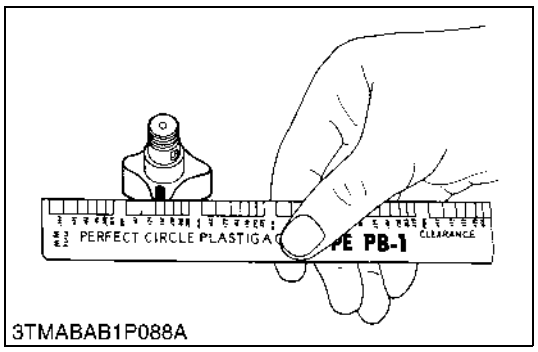


**Clearance between Rotor and Cover**

1. Put a strip of plastigage (Code No. 07909-30241) onto the rotor face with grease.
2. Install the cover and tighten the screws.
3. Remove the cover carefully, and measure the amount of the flattening with the scale and get the clearance.
4. If the clearance exceeds the factory specifications, replace oil pump rotor assembly.

| | | |
|---|---|---|
| Clearance between rotor and cover | Factory spec. | 0.025 to 0.075 mm<br>0.0010 to 0.0029 in. |

W10382660

# [4] COOLING SYSTEM

## (1) Checking and Adjusting

## (A) Fan Belt

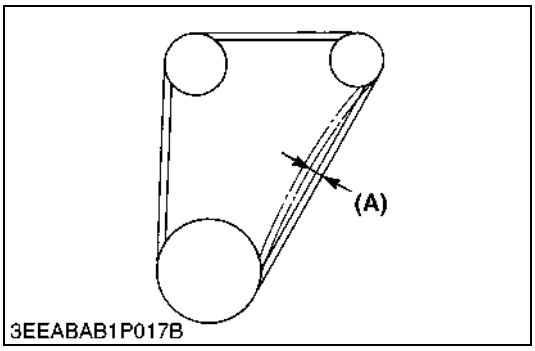


### Fan Belt Tension

1. Measure the deflection **(A)**, depressing the belt halfway between the fan drive pulley and alternator pulley at specified force (98 N, 10 kgf, 22 lbs).
2. If the measurement is not within the factory specifications, loosen the alternator mounting screws and relocate the alternator to adjust.

| | | |
|---|---|---|
| Deflection **(A)** | Factory spec. | Approx. 10 mm<br>0.4 in. |

**(A) Deflection**

W10384280

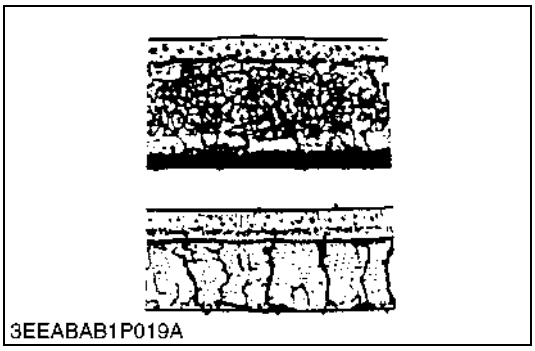


### Fan Belt Damage and Wear

1. Check the fan belt for damage.
2. If the fan belt is damaged, replace it.
3. Check if the fan belt is worn and sunk in the pulley groove.
4. If the fan belt is nearly worn out and deeply sunk in the pulley groove, replace it.

**(A) Good** **(B) Bad**

W10385490

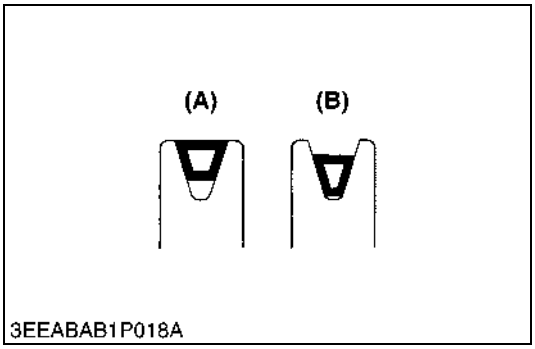

## (B) Radiator

**CAUTION**

- **When removing the radiator cap, wait at least ten minutes after the engine has stopped and cooled down. Otherwise, hot water may gush out, scalding nearby people.**

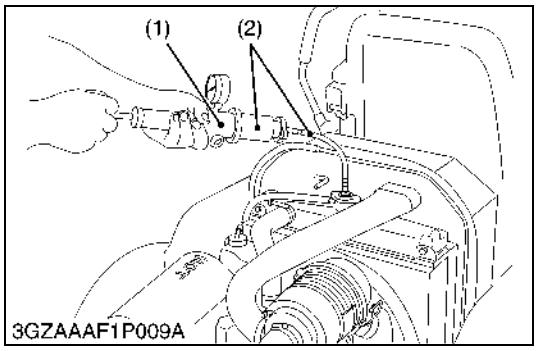


**Radiator Water Leakage**

1. Pour a specified amount of water into the radiator.
2. Set a radiator tester (1) (Code No. 07909-31551) and an adapter (2) (BANZAI Code No. RCT-2A-30S) and raise the water pressure to the specified pressure.
3. Check the radiator for water leaks.
4. For water leak from the pinhole, repair with the radiator cement. When water leak is excessive, replace the radiator.

| | | |
|---|---|---|
| Radiator water leakage test pressure | Factory spec. | 137 kPa<br>1.4 kgf/cm$^2$<br>20 psi |

(1) Radiator Tester (2) Adaptor

W10387530

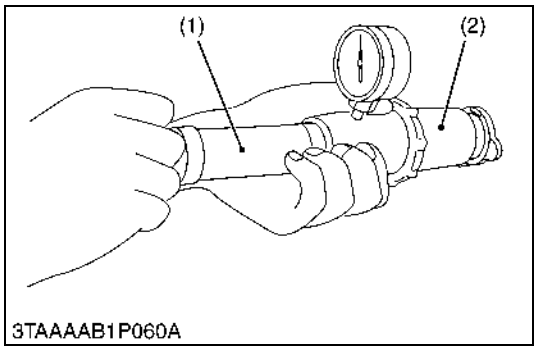


**Radiator Cap Air Leakage**

1. Set a radiator tester (1) and adaptor (2) (BANZAI Code No. RCT-2A-30S) on the radiator cap.
2. Apply the specified pressure (88 kPa, 0.9 kgf/cm$^2$, 13 psi), and measure the time for the pressure to fall to 59 kPa (0.6 kgf/cm$^2$, 9 psi).
3. If the measurement is less than the factory specification, replace the radiator cap.

| | | |
|---|---|---|
| Pressure falling time | Factory spec. | More than 10 seconds for pressure fall from 88 to 59 kPa (from 0.9 to 0.6 kgf/cm$^2$, from 13 to 9 psi) |

(1) Radiator Tester (2) Adaptor

W1054156

## (C) Thermostat

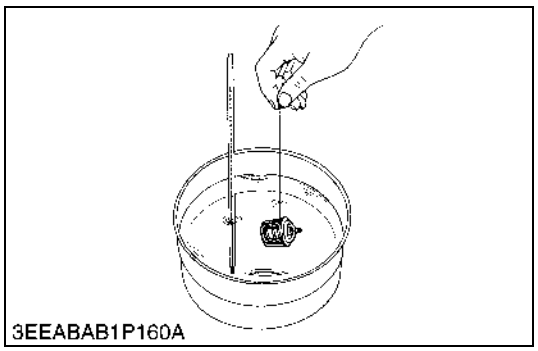


**Thermostat Valve Opening Temperature**

1. Suspend the thermostat in the water by a string with its end inserted between the valve and seat.
2. Heating the water gradually, read the temperature when the valve opens and leaves the string.
3. Continue heating and read the temperature when the valve opens approx. 6 mm (0.236 in.).
4. If the measurement is not within the factory specifications, replace the thermostat.

| | | |
|---|---|---|
| Thermostat's valve opening temperature | Factory spec. | 80.5 to 83.5 °C<br>176.9 to 182.3 °F |
| Temperature at which thermostat completely opens | Factory spec. | 95 °C<br>203 °F |

W10390350

## (2) Disassembling and Assembling

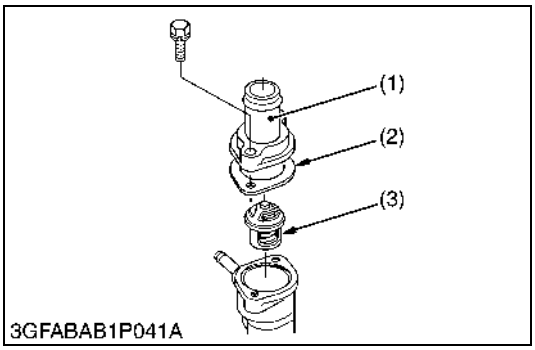


**Thermostat Assembly**

1. Remove the thermostat cover mounting screws, and remove the thermostat cover (1).
2. Remove the thermostat assembly (3).

**(When reassembling)**

- Apply a liquid gasket (Three Bond 1215 or equivalent) only at the thermostat cover side of the gasket (2).

(1) Thermostat Cover
(2) Thermostat Cover Gasket
(3) Thermostat Assembly

W10393690

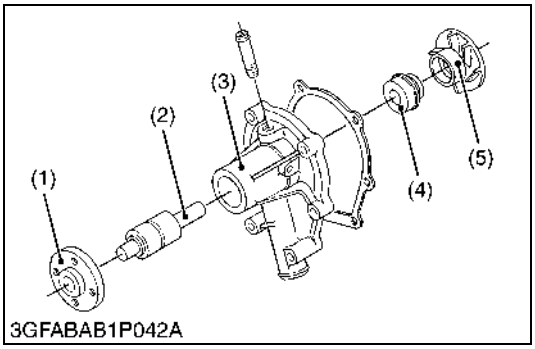


**Water Pump Assembly**

1. Loosen the alternator mounting bolts, and remove the fan belt.
2. Remove the fan and fan pulley.
3. Remove the water pump assembly from the gear case cover.
4. Remove the water pump flange (1).
5. Press out the water pump shaft (2) with the impeller (5) on it.
6. Remove the impeller from the water pump shaft (2).
7. Remove the mechanical seal (4).

**(When reassembling)**

- Apply a liquid gasket (Three Bond 1215 or equivalent) to the both sides of gasket.
- Replace the mechanical seal with new one.

(1) Water Pump Flange
(2) Water Pump Shaft
(3) Water Pump Body
(4) Mechanical Seal
(5) Impeller

W10395040

# [5] FUEL SYSTEM

## (1) Checking and Adjusting

## (A) Injection Pump

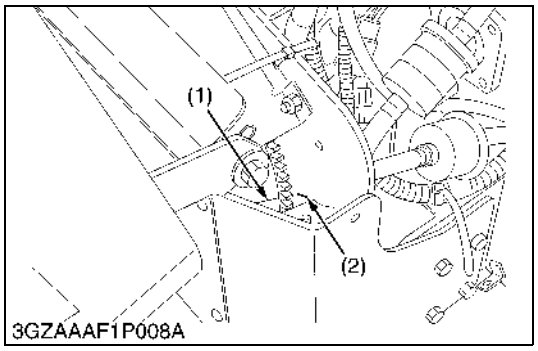


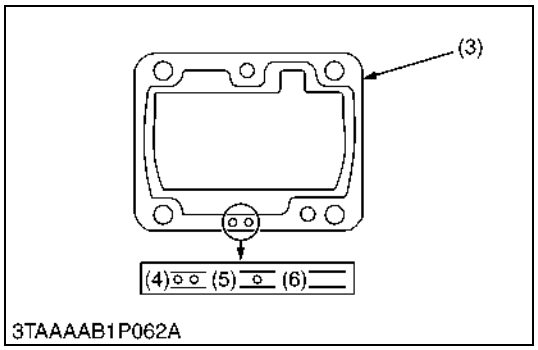


**Injection Timing**

1. Remove the injection pipes.
2. Remove the engine stop solenoid.
3. Turn the flywheel counterclockwise (facing the flywheel) until fuel flows from the delivery valve holder.
4. Continue to turn the flywheel slowly, and stop it as soon as the fuel level at the tip of the delivery valve holder begins to increase.
5. Check to see if the timing angle lines on the flywheel is aligned with the alignment mark (2).
6. If the injection timing is out of adjustment, readjust the timing with shims.

| | | |
|---|---|---|
| Injection timing | Factory spec. | 0.30 to 0.33 rad<br>(17 to 19°) before T.D.C. |

■ **NOTE**

- **The sealant is applied to both sides of the shim (soft metal gasket shim). The liquid gasket is not required for assembling.**
- **Shims are available in thickness of 0.20 mm (0.0079 in.), 0.25 mm (0.0098 in.) and 0.30 mm (0.0118 in.). Combine these shims for adjustments.**
- **Addition or reduction of shim (0.05 mm, 0.0020 in.) delays or advances the injection timing by approx. 0.0087 rad (0.5°).**
- **In disassembling and replacing the injection pump, be sure to use the same number of new shims with the same thickness.**
- **Refer to figure left to check the thickness of the shims.**

(1) Timing Line
(2) Alignment Mark
(3) Shim (Soft Metal Gasket Shim)
(4) Two-holes : 0.20 mm (0.0079 in.)
(5) One-hole : 0.25 mm (0.0098 in.)
(6) Without hole : 0.30 mm (0.0118 in.)

W10397720

## (B) Injection Nozzle

**CAUTION**

- **Check the injection pressure and condition after confirming that there is nobody standing in the direction the fume goes.**
  **If the fume from the nozzle directly contacts the human body, cells may be destroyed and blood poisoning may be caused.**

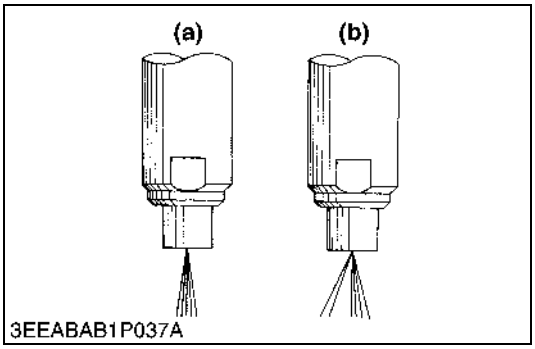


**Nozzle Spraying Condition**

1. Set the injection nozzle to a nozzle tester (Code No. 07909-31361), and check the nozzle spraying condition.
2. If the spraying condition is defective, replace the nozzle piece.

**(a) Good** **(b) Bad**

W10411400

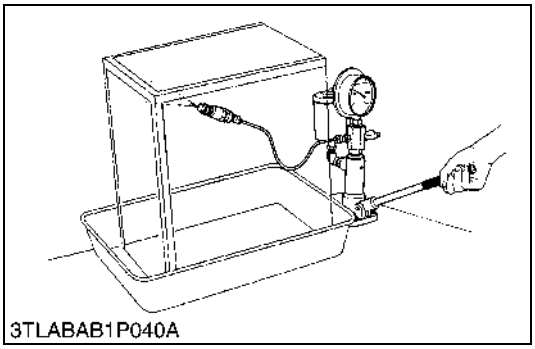


**Fuel Injection Pressure**

1. Set the injection nozzle to a nozzle tester (Code No. 07909-31361).
2. Slowly move the tester handle to measure the pressure at which fuel begins to jet out from the nozzle.
3. If the measurement is not within the factory specifications, replace the adjusting washer (1) in the nozzle holder to adjust it.

| | | |
|---|---|---|
| Fuel injection pressure | Factory spec. | 13.7 to 14.7 MPa<br>140 to 150 kgf/cm$^2$<br>1990 to 2130 psi |

**(Reference)**

- Pressure variation with 0.025 mm (0.001 in.) difference of adjusting washer thickness.
  Approx. 59 kPa (0.6 kgf/cm$^2$, 8.5 psi)

(1) Adjusting Washer

W10408820

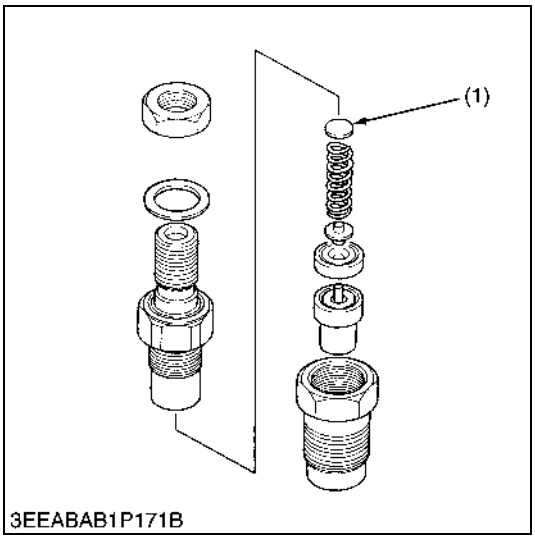


**Valve Seat Tightness**

1. Set the injection nozzle to a nozzle tester (Code No. 07909-31361).
2. Raise the fuel pressure, and keep at 12.7 MPa (130 kgf/cm$^2$, 1850 psi) for 10 seconds.
3. If any fuel leak is found, replace the nozzle piece.

| | | |
|---|---|---|
| Valve seat tightness | Factory spec. | No fuel leak at<br>12.7 MPa<br>130 kgf/cm$^2$<br>1850 psi |

W10412730

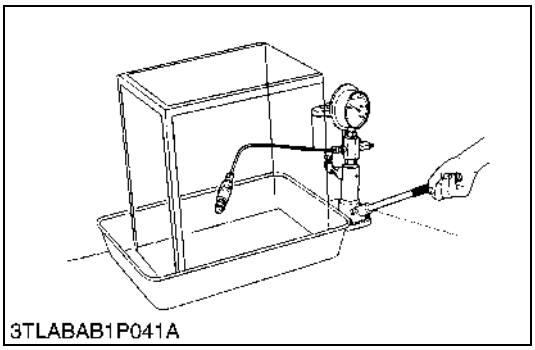

## (2) Disassembling and Assembling

## (A) Injection Nozzle

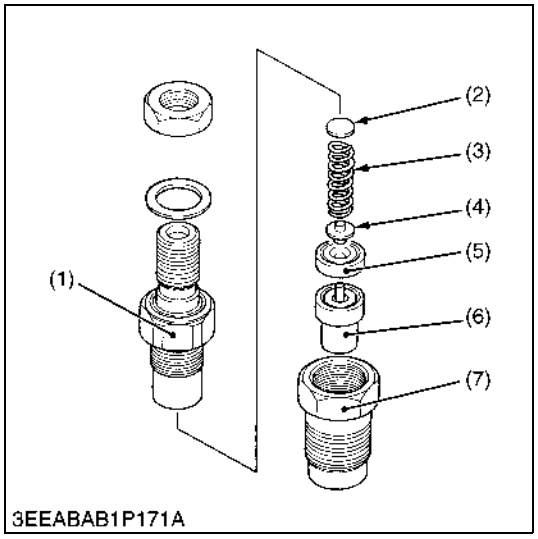


**Nozzle Holder**

1. Secure the nozzle retaining nut (7) with a vise.
2. Remove the nozzle holder (1), and take out parts inside.

**(When reassembling)**

- Assemble the nozzle in clean fuel oil.
- Install the push rod (4), noting its direction.
- After assembling the nozzle, be sure to adjust the fuel injection pressure.

| | | |
|---|---|---|
| Tightening torque | Nozzle holder | 34.3 to 39.2 N·m<br>3.5 to 4.0 kgf·m<br>25.3 to 28.9 ft-lbs |
| | Overflow pipe nut | 19.6 to 24.5 N·m<br>2.0 to 2.5 kgf·m<br>14.5 to 18.1 ft-lbs |
| | Nozzle holder assembly | 49.0 to 68.6 N·m<br>5.0 to 7.0 kgf·m<br>36.2 to 50.6 ft-lbs |

(1) Nozzle Holder
(2) Adjusting Washer
(3) Nozzle Spring
(4) Push Rod
(5) Distance Piece
(6) Nozzle Piece
(7) Nozzle Retaining Nut

W10415210

**EDITOR:**
KUBOTA FARM & INDUSTRIAL MACHINERY SERVICE, LTD.
64, ISHIZU-KITAMACHI, SAKAI-KU, SAKAI-CITY, OSAKA, 590-0823, JAPAN
PHONE : (81)72-241-1129
FAX : (81)72-245-2484
E-mail : ks_g.ksos-pub@kubota.com

Printed in Japan 2009. 04, S, EI, EI, engusa Code No.9Y011-15062
2001. 02, S, EI, EI, engusa

**KUBOTA Corporation**